VALVE AND HYDRANT MANUAL

AMERICAN

FLOW CONTROL

THE RIGHT WAY

AMERICAN Flow Control

CONTENTS

Introduction

Section 1 American-Darling® Fire Hydrants

Section 2 Waterous Fire Hydrants

Section 3 Resilient Wedge Gate Valves

Section 4 Indicator Post

Section 5 Tapping Valves

Section 6 Tapping Sleeves

Section 7 Check Valves

Section 8 Trench Adapter

Section 8A Retrofit Valve Box Insert

Section 9 Warranty

AMERICAN Flow Control

INTRODUCTION

Introduction

Divisions

History

Historical Contributions

AMERICAN Flow Control PRODUCTS

Fire Hydrants
American - Darling 4-1/2 in., 5-1/4 in.
Waterous 4-3/4 in., 5-1/4 in.

Gate Valves - Resilient Seated
2 in. - 66 in. 250 psig - Ductile Iron

Indicator Posts

Tapping Valves
4 in. - 48 in.

Tapping Sleeves
4 in. x 4 in. - 24 in. x 24 in.

Swing Check Valves
2-1/2 in. - 16 in.

Trench Adapters
(Adjustable valve box systems)

Retrofit Valve Box Inserts

For the nearest AFC distributor, contact Customer Service at one of the following locations or search our web site as shown below:

http://www.american-usa.com/afc

AMERICAN Flow Control
A Division of AMERICAN

AMERICAN Flow Control
P.O. Box 2727
Birmingham, AL 35202-2727
Phone: 800-326-8051
Fax: 800-610-3569
Email: afcsales@american-usa.com

Waterous Company
125 Hardman Avenue South
South St. Paul, MN 55075-2421
Phone: 888-266-3686
Fax: 800-601-2809
Email: afcsales@american-usa.com

AMERICAN Divisions and Subsidiaries

AMERICAN Valve & Hydrant Manufacturing Company

Beaumont, Texas **Phone: 800-326-7082**

Valves, fire hydrants, valve box systems, tapping sleeves and tapping saddles

Waterous Company

South St. Paul, Minnesota **Phone: 888-266-3686**

Valves, fire hydrants, tapping sleeves and pumps for fire trucks and other miscellaneous pumps

AMERICAN Ductile Iron Pipe Divison

Birmingham, Alabama **Phone: 205-325-7773**

A complete line of 4 in. - 64 in. ductile iron pipe and ductile iron fittings

AMERICAN Spiralweld Pipe Company

Birmingham, Alabama **Phone: 866-442-ASWP (2797)**

ASWP manufactures premium quality, spiral-welded steel pipe. ASWP's spiral-welded steel pipe is designed and manufactured to meet the increasing demands of the water, wastewater, hydropower and industrial markets for large-diameter pipe.

AMERICAN Steel Pipe Division

Birmingham, Alabama **Phone: 205-325-7742**

Electric Resistance Weld (ERW) Steel Pipe:

- 10-3/4 in. - 24 in. - Up to .750 in. wall thickness
- API line pipe - Grade B through X-70
- ASTM pipe
- AMERICAN Steel slurry pipe
- Structural pipe and pipe piling

Specification Rubber Products, Inc.

Alabaster, Alabama **Phone: 205-663-2521**

High quality molded rubber pipe gaskets and other engineered rubber products

AMERICAN Casting, LLC

Pyror, Oklahoma **Phone: 918-476-8321**

AMERICAN Castings specializes in medium to high volume intricately cored ductile and gray iron castings.

AMERICAN CAST IRON PIPE COMPANY

The parent company of AMERICAN Flow Control is the AMERICAN Cast Iron Pipe Co. with international headquarters located in Birmingham, Alabama. Organized in 1905, the AMERICAN Cast Iron Pipe Company operates the largest ductile iron pipe manufacturing plant in the United States. The AMERICAN Cast Iron Pipe Company is unique in that it is one of the oldest and most successful employee-owned and employee-managed companies in the country. Its operation is in accordance with the Eagan Plan which bears the name of its founder and first president, Mr. John Joseph Eagan. Before his death on March 30, 1924, Mr. Eagan acquired all of the outstanding common stock of AMERICAN and deposited it in a trust established for the benefit of the employees.

Mr. Eagan was a devout Christian who applied his faith to every moment of his private and public life. His deep convictions convinced him of the practicality of applying Christian principles to industry. On June 3, 1921, Mr. Eagan proposed to the Board of Directors the following: “Gentlemen: I recommend that we adopt the principles of Jesus Christ as the guiding principles of this business. I believe that the running of our plant on such principles will result in greater efficiency and better results. I feel sure that the principles of Christ, if honestly applied, will give the victory in any avenue of human endeavor and experience.”

AMERICAN is one of the world's largest manufacturers of piping and valve products for the water, sewer, gas transmission and industrial markets.

In 1969 AMERICAN purchased the waterworks division of Darling Valve and Manufacturing Company located in Williamsport, Pennsylvania. Darling Valve became known as American-Darling Valve. In March 1989, the company acquired the Waterous Company of South St. Paul, Minnesota.

AMERICAN FLOW CONTROL

In March of 1991, the management of AMERICAN made the decision to merge its two valve and hydrant producing subsidiaries, American-Darling Valve and Waterous, into one operating division. This new division became AMERICAN Flow Control. Thus was born one of the world's largest and most diverse valve and hydrant producers. This merger produced a division with nearly 300 years combined experience in the design and production of waterworks and fire protection products. Today, production facilities are located in Beaumont, Texas, and South St. Paul, Minnesota. AMERICAN Flow Control serves the United States and international markets with an array of valve and hydrant products.

AMERICAN - DARLING VALVE

Founded in 1888 as the Darling Pump & Mfg. Co. Ltd., the company was organized to manufacture and sell Darling oil well pumps and supplies and engage in the business of general brass founding and machining. Having been born into the rapidly developing petroleum industry, the Company's product line was soon expanded to include gate valves for well control, flow-line and pipe-line use. At the turn of the century fire hydrants, gate valves and accessories for water and fire lines became an important part of the product line. The product line continued to expand and eventually included cast steel valves, bronze and special alloy gate valves and high grade specialties for the nuclear and industrial markets. In 1969 AMERICAN acquired the waterworks product line.

WATEROUS COMPANY

Waterous Company was founded in 1844 as the Waterous Engine Works Co., Ltd. It was founded by C. H. Waterous in Brantford, Ontario Canada. The company built steam fire engines and saw mill equipment. In 1881, the twin sons of C. H. Waterous set up a branch in Winnipeg. When this facility was outgrown, the Waterous brothers moved the operations to South St. Paul, Minnesota. At this new location Waterous Company produced steam fire engines and hook and ladder trucks, switching in later years to horse-drawn gasoline fire engines and motorized apparatus. In 1886 Waterous Company began producing fire hydrants. Production was temporarily disrupted in 1904 when, ironically, a fire destroyed the plant.

In 1886, Waterous Company introduced its first steam pumper, and in 1898, the company introduced the world's first gasoline powered pumper. Eight years later, Waterous developed the first gasoline engine self-propelled pumper which was sold to Wayne, Pennsylvania.

New York City purchased its first self-propelled fire engine from Waterous Company in 1909. Waterous Company assembled the complete machines including motors, transmissions, rear axles and pumps.

With the acquisition of Traverse City Iron Works in 1978, Waterous Company expanded its line of waterworks and fire protection products to include gate valves, tapping sleeves and indicator posts.

Waterous Company was purchased in 1989 and is a wholly-owned subsidiary of AMERICAN.

The Story of AMERICAN
Flow Control

View Video

AMERICAN'S CONTRIBUTION TO THE INDUSTRY
BEGINNING OUR SECOND CENTURY

1898

Waterous introduces the world's first gasoline powered fire pump.

1907

Waterous develops the world's first self-propelled fire truck.

1922

AMERICAN Cast Iron Pipe Co. furnishes this country's first cement-lined cast iron pipe.

1929

AMERICAN Cast Iron Pipe Co. invents the Mechanical Joint for cast iron pipe.

1938

Darling Valve patents and sells the first traffic model fire hydrant.

1955

AMERICAN Cast Iron Pipe Co. ships the first ductile iron pipe.

1981

Waterous introduces the Series 500 (now called the AMERICAN Flow Control Series 500) the first resilient wedge gate valve to have a fusion bonded epoxy coating on both the interior and exterior of the valve. Epoxy has since become an industry standard.

1988

AMERICAN Cast Iron Pipe Co. introduces the USA's first 60 in. and 64 in. ductile iron pipe.

1989

Waterous introduces the USA's first reduced wall ductile iron resilient wedge gate valve.

1996

AMERICAN Flow Control introduces the all Ductile Iron Pacer Fire Hydrant.
AMERICAN Flow Control introduces the 14 in - 24 in. ductile iron resilient wedge gate valves.

1998

AMERICAN Flow Control introduces the 2, 2-1/2 and 3 in. ductile iron resilient wedge gate valve.
AMERICAN Flow Control introduces the 4 in. - 12 in. ductile iron epoxy coated resilient seated check valve.
Received ISO 9001 Certification.

2002

AMERICAN Flow Control introduces the 48 in. ductile iron resilient wedge gate valve.

2005

AMERICAN Flow Control introduces the first bolt-less restrained joint gate valve.
Waterous introduces the first standard production polyurethane coated upper barrel in the U.S.

2008

AMERICAN Flow Control introduces the first U.S. produced 54 in. and 60 in. resilient wedge gate valve.

2009

AMERICAN Flow Control becomes the first manufacturer to use an e-coat in the production of fire hydrants.
AMERICAN Ductile Iron Pipe introduces Armor coated push bar ductile iron pipe.

2011

AMERICAN Flow Control produces the first U.S. produced 66 in. resilient wedge gate valve.

2012

AMERICAN Ductile Iron Pipe achieved a world record horizontal directional drilling (HDD) pull for 36 in. diameter pipe.

2013

AMERICAN Flow Control introduces 14 in. - 24 in. OS&Y resilient wedge gate valves.

AMERICAN Flow Control

SECTION 1

FIRE HYDRANTS (American-Darling)

4-1/2" American-Darling® Mark 73-5	1A-1 through 1A-26
5-1/4" American-Darling® B-84-B-5	1B-1 through 1B-26
5-1/4" American-Darling® B-62-B-5	1C-1 through 1C-26

AMERICAN

FLOW CONTROL

THE RIGHT WAY

INDEX

4-1/2" AMERICAN - DARLING® MARK 73-5 FIRE HYDRANT

Page

INTRODUCTION AND HISTORY 1A-2

ORDERING

Dimensions:

Overall Hydrant 1A-3

Optional Bases 1A-4

Operating Nut Sizes 1A-5, 1A-6

Weights 1A-7

Friction Loss 1A-8

Submittal Sheet 1A-9

INSTALLATION AND TESTING

Installation 1A-10

Testing 1A-11, 1A-12

OPERATION AND MAINTENANCE

Operation and Maintenance 1A-12, 1A-13

Troubleshooting Guide 1A-14, 1A-15

REPAIRS

Parts List 1A-16, 1A-17, 1A-18

Spare Parts 1A-18

Repair Instructions 1A-19, 1A-20

Traffic Damage Repair 1A-21

Nozzle Replacement 1A-22

Mechanically Attached Nozzles 1A-23, 1A-24

EXTENDING

Extension Instructions 1A-25

SPECFICATIONS 1A-26

4-1/2" AMERICAN - DARLING® MARK 73-5 FIRE HYDRANT

View Video

The 4-1/2" American-Darling MARK 73-5 hydrant incorporates over 100 years of experience in design, manufacture and field experience. This means dependable and efficient operation when needed.

Introduced in 1973, the **4-1/2" American-Darling MARK 73-5** hydrant is rated at 250 psig and is seat tested at 500 psig. The hydrant meets or exceeds all requirements of ANSI/AWWA C502 for dry barrel hydrants.

The **4-1/2" American-Darling MARK 73-5** hydrant has all the features you expect from a high quality fire hydrant. The epoxy primer and polyurethane top coat system on external surfaces of the upper barrel provide a durable, high-gloss finish that will continue to look good for years without repainting. The all bronze seat and bronze drain ring assure that the **4-1/2" American-Darling MARK 73-5** hydrant is easily repaired.

Optional UL-FM in Allowable Configurations

The **4-1/2" American-Darling MARK 73-5** hydrant is UL Listed by UL as meeting their standard UL 246, latest edition. FM Approvals has approved the **4-1/2" American-Darling MARK 73-5**. Both UL and FM Approvals require that we consistently manufacture and test our hydrants in compliance with their stringent requirements. Our facilities are subject to periodic inspections to assure we are in compliance with their standards.

4-1/2” AMERICAN-DARLING® MARK 73-5 DIMENSIONS

Depth of Trench	Length of Lower Rod
2’ -0”	21.50”
2’ -6”	27.50”
3’ -0”	33.50”
3” -6”	39.50”
4’ -0”	45.50”
4’ -6”	51.50”
5’ -0”	57.50”
5’ -6”	63.50”
6’ -0”	69.50”
6’ -6”	75.50”
7’ -0”	81.50”
7’ -6”	87.50”
8’ -0”	93.50”
8’ -6”	99.50”
9’ -0”	105.50”
9’ -6”	111.50”
10’ - 0”	117.50”
10’ -6”	123.50”
11’ -0”	129.50”
11’ -6”	135.50”
12’ -0”	141.50”
12’ -6”	147.50”
13’ -0”	153.50”
13’ -6”	159.50”
14’ -0”	165.50”
14’ -6”	171.50”
15’ -0”	177.50”
15’ -6”	183.50”
16’ -0”	189.50”
16’ -6”	195.50”
17’ -0”	201.50”
17’ -6”	207.50”
18’ -0”	213.50”
18’ -6”	219.50”
19’ -0”	225.50”
19’ -6”	231.50”

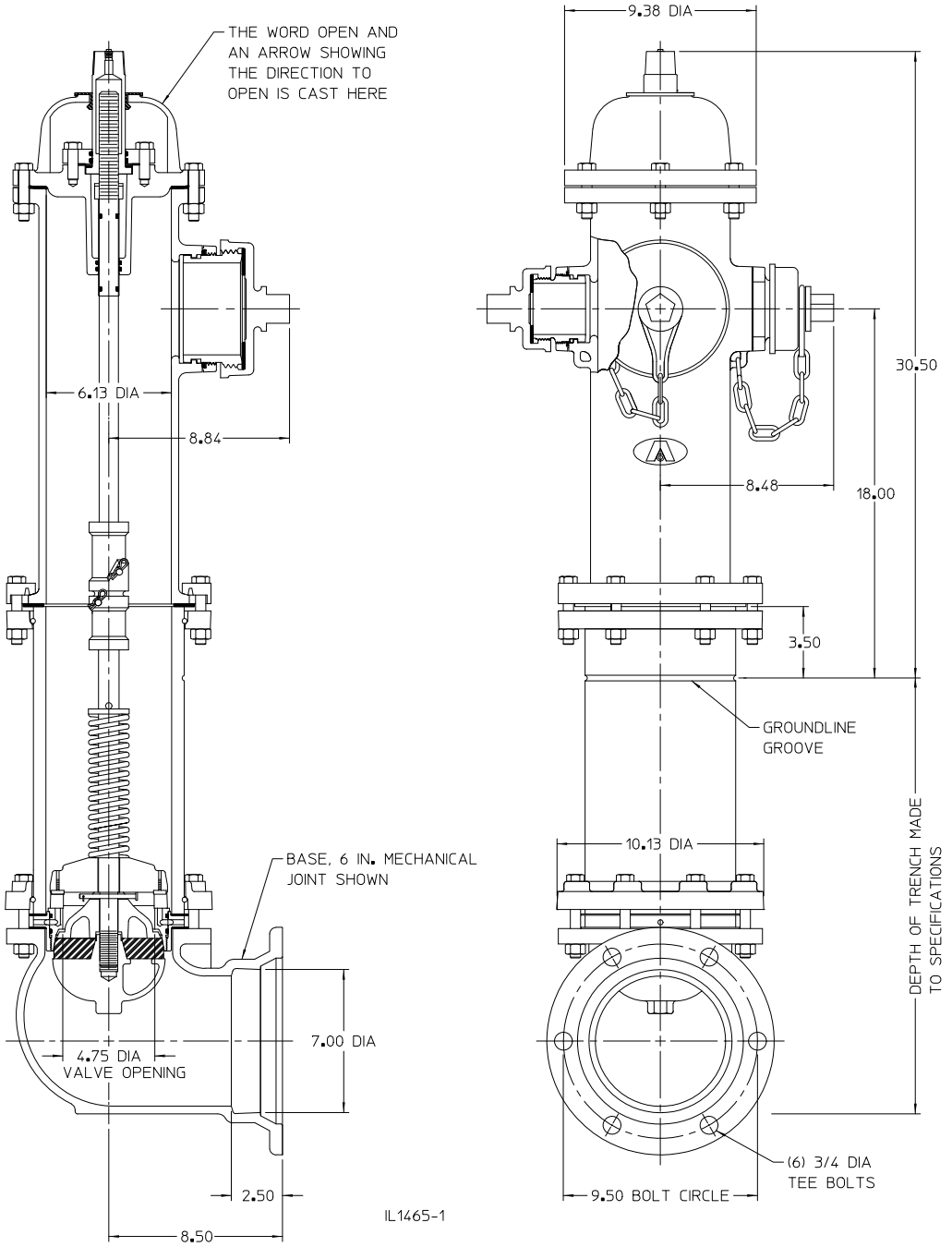

NOTES:

1. Depth of trench is the nominal distance from ground line to bottom of connecting pipe.
2. Size and shape of nut on operating nut and cap, threading on nozzles and caps, and the direction of opening made to specifications.
3. Cap chains are not furnished unless specified.
4. Working pressure 250 psig, test pressure 500 psig.
5. Hydrant meets or exceeds the ANSI/AWWA C502 standard.
6. Upper barrel can be rotated 360 degrees.
7. UL Listed and Approved by FM Approvals at 250 psig in allowable configurations.
8. Certified to NSF/ANSI 61 and NSF/ANSI 372, which exhibit compliance with the U.S. Safe Drinking Water Act

4-1/2" AMERICAN-DARLING® MARK 73-5 DIMENSIONS, OPTIONAL BASES

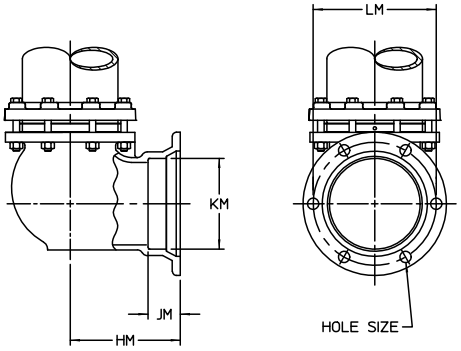

SIZE	HM	JM	KM	LM	HOLES	
					NO.	SIZE
4	8.50	2.50	4.91	7.50	4	7/8
6	8.50	2.50	7.03	9.50	6	7/8
8	10.25	2.50	9.18	11.75	6	7/8

MECHANICAL JOINT BASE

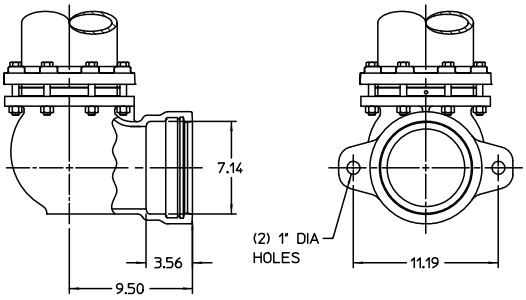

6" TYTON BASE WITH LUGS

TYTON® is a registered trademark of United States Pipe and Foundry Co., LLC.

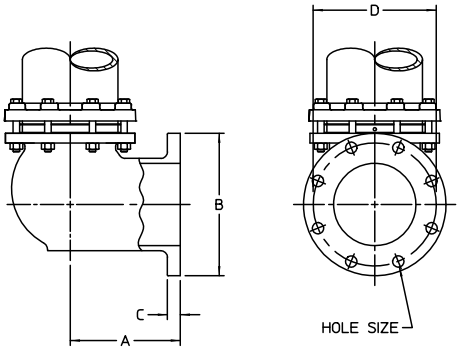

SIZE	A	B	C	D	HOLES	
					NO.	SIZE
4	8.00	9.00	0.94	7.50	8	3/4
6	8.50	11.00	1.00	9.50	8	7/8

FLANGED BASE

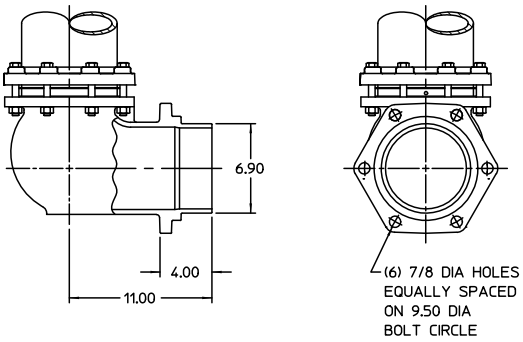

6" PLAIN END W/INTEGRAL
MJ GLAND BASE

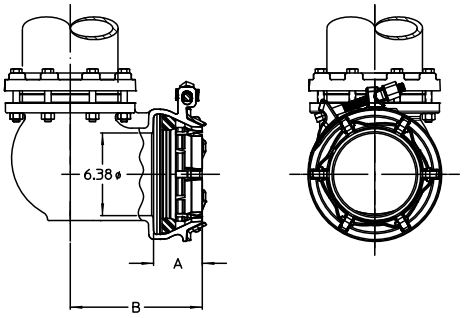

JOINT	A	B
ALPHA™	3.75	10.19
ALPHA™ XL	4.042	10.48

6" ALPHA™ AND ALPHA™ XL BASE

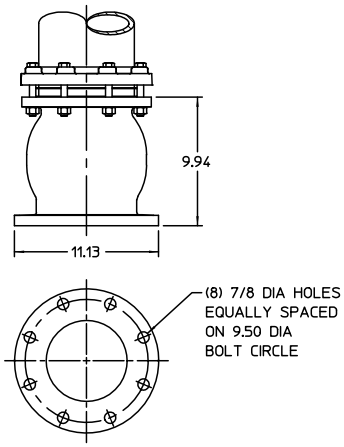

6" FLANGED VERTICAL ENTRY BASE

ALPHA™ is a trademark of Romac Industries, Inc. (U.S. Patent 8,894,100)

IL1473-2A

4-1/2" AMERICAN-DARLING® MARK 73-5 OPERATING NUT SIZES

Square "A" **Pentagon "B"** **Hexagon "C"** **Triangle "D"**

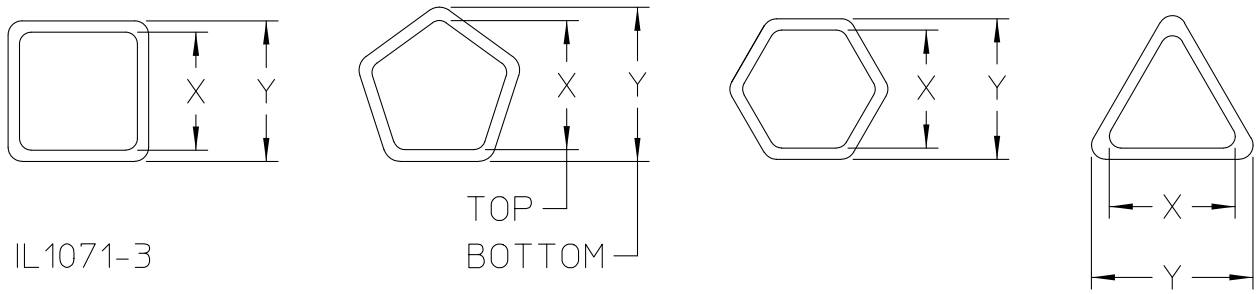

NOTES:

1. Operating nut furnished L.H. opening (counterclockwise) or R.H. (clockwise)
2. Cap nuts 1.125 high.

Nut Shape	American-Darling Nut No.	X	Y
Square "A"	A-1	.750	.812
	A-2	.750	.875
	A-3	.812	.875
	A-8	.875	.938
	A-9	.875	1.000
	A-12	.938	1.000
	A-13	.938	1.062
	A-16	1.000	1.062
	A-17	1.062	1.125
	A-19	1.125	1.188
	A-23	1.188	1.188
	A-24	1.188	1.250
	A-38	.750	.750
	A-41	1.125	1.125
Pentagon "B"	B-2	1.000	1.000
	B-3	1.000	1.062
	B-5	1.062	1.125
	B-11	1.125	1.188
	B-12	1.125	1.312
	B-13	1.125	1.375
	B-18	1.188	1.250
	B-23	1.250	1.250
	B-24	1.250	1.312
	B-26	1.250	1.375
	B-27	1.250	1.500
	B-31	1.312	1.375

4-1/2" AMERICAN-DARLING® MARK 73-5 OPERATING NUT SIZES

Nut Shape	American-Darling Nut No.	X	Y
Pentagon "B"	B-34	1.375	1.438
	B-35	1.375	1.500
	B-36	1.375	1.750
	B-41	1.438	1.500
	B-49	1.500	1.562
	B-50	1.500	1.625
	B-54	1.562	1.625
	B-69	1.125	1.250
	B-74	1.375	1.375
	B-75	.812	.875
	B-76	1.812	1.875
Hexagon "C"	C-1	1.062	1.125
	C-2	1.125	1.188
	C-5	1.188	1.188
	C-6	1.188	1.250
	C-8	1.312	1.375
	C-10	1.375	1.438
	C-15	1.438	1.500
	C-18	1.500	1.500
	C-22	1.250	1.312
	C-23	1.000	1.000
Triangle "D"	D-1	1.375	1.375
	D-2	1.375	1.375
	D-3	1.750	1.812

4-1/2” AMERICAN-DARLING® MARK 73-5 WEIGHTS WITH 6 INCH MECHANICAL JOINT BASE AND ACCESSORIES (GLAND, GASKET AND HARDWARE)

TWO HOSE AND ONE PUMPER NOZZLE	
TRENCH DEPTH	WEIGHT (LBS)
3’-0”	315
3’-6”	335
4’-0”	355
4’-6”	375
5’-0”	395
5’-6”	415
6’-0”	435
6’-6”	455
7’-0”	475
7’-6”	495
8’-0”	515
8’-6”	535
9’-0”	555
9”-6”	575
10’-0”	595

Add or deduct 20 lbs for each 6 in. variance in bury depth.

Add for: 6 in. Flanged base - 30 lbs

Deduct for: Two hose nozzles only - 25 lbs

4-1/2” AMERICAN-DARLING® MARK 73-5 FRICTION LOSS CURVE

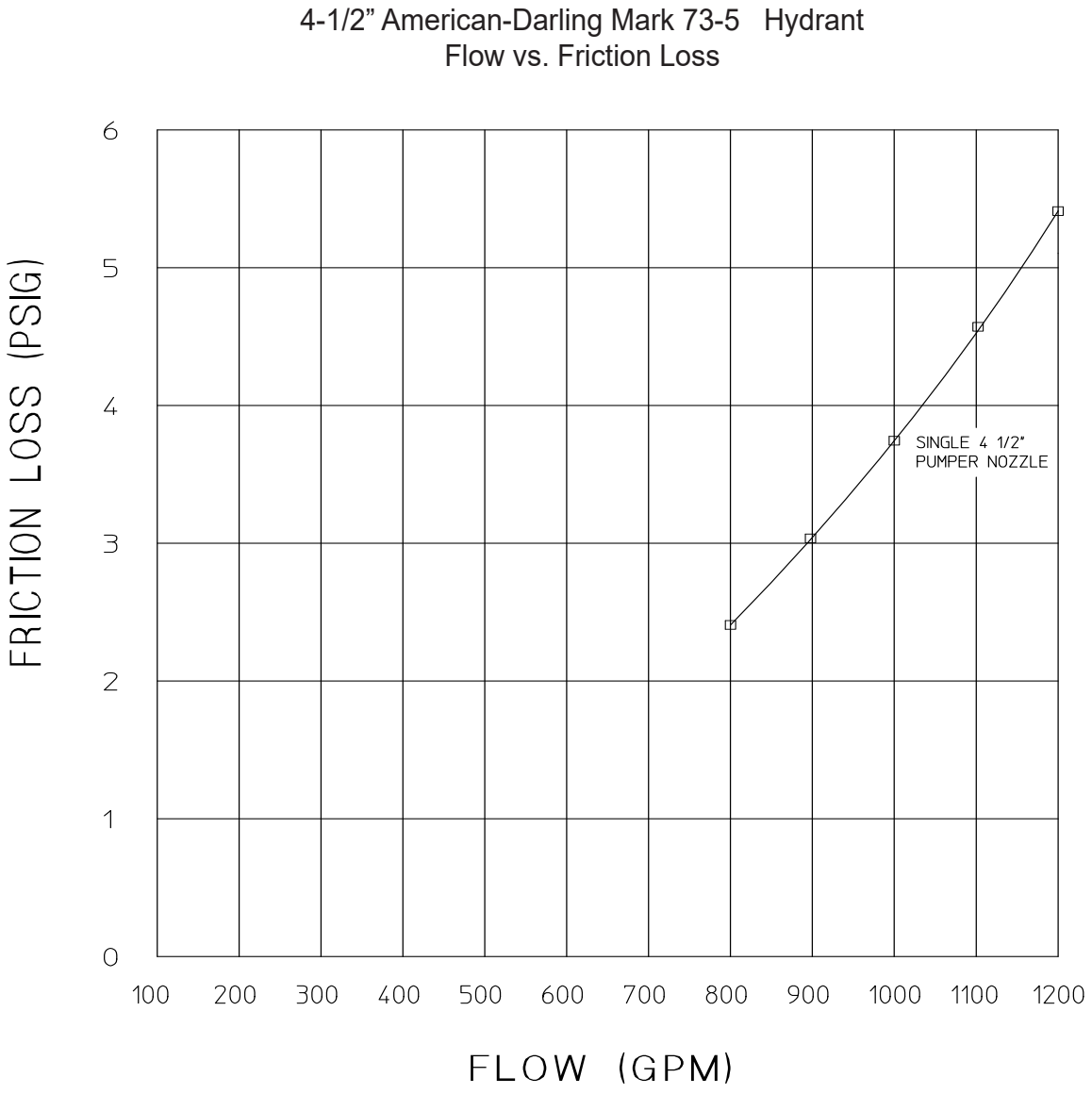

AMERICAN Flow Control®
4-1/2" AMERICAN-DARLING® MARK 73-5 FIRE HYDRANT
SUBMITTAL SHEET

City Specification: _____ Quantity: _____		
Direction to Open: ☐ Left (C.C.W.) ☐ Right (C.W.)		
Operating Nut Size: _____ Shape _____ American Darling No. (If Known) _____		
Nozzles		
Configuration: (Check One)	**Pumper Nozzle:**	**Hose Nozzle:**
☐ Two Hose, One Pumper ☐ Two Hose ☐ One Pumper	Storz: 4 in. 5 in. National Std ☐ Yes ☐ No Size ___ _____ _____ _____ Pitch Dia x _____T.P.I. _____ O. D. American-Darling Thread (If Known) _____ _____ _____ _____	National Std ☐ Yes ☐ No Size ___ _____ _____ _____ _____ Pitch Dia x _____T.P.I. _____ O. D. American -Darling Thread (If Known) _____ _____ _____ _____
Nozzle Cap Chains: ☐ Yes ☐ No		
Depth of Trench:		
Base Connection: (Check One) ☐ 4" MJ ☐ 6" MJ ☐ 8" MJ ☐ 4" Class 125 Flange ☐ 6" Class 125 Flange ☐ 6" TYTON® ☐ 6" Plain End with Intergral MJ Gland ☐ 6" Vertical Entry ☐ 6" ALPHA™ ☐ 6" ALPHA™ XL		
Paint Color: _____ _____ _____		
UL Listed, FM Approved: ☐ Yes ☐ No		
Other Requirements: (List)		

AMERICAN Flow Control
American-Darling & Waterous
A Division of AMERICAN

NOTES:

1. Meets or exceeds requirements of ANSI/AWWA C502, latest revision, with 250 psig rated working pressure.
2. UL Listed and Approved by FM Approvals at 250 psig in allowable configurations.
3. Certified to NSF/ANSI 61 and NSF/ANSI 372.
4. TYTON® is a registered trademark of United States Pipe and Foundry Co., LLC.
5. ALPHA™ is a trademark of Romac Industries, Inc. (U.S. Patent 8,894,100)

Visit our website at http://www.american-usa.com/afc

4-1/2" AMERICAN-DARLING® MARK 73-5 INSTALLATION

This instruction is issued as a recommendation to the customer for the proper use of the AMERICAN Flow Control manufactured fire hydrants. AMERICAN recommends you follow the general Inspection and Installation guidelines outlined in AWWA Manual *M17 for Installation, Field Testing, and Maintenance of Fire Hydrants* and/or as recommended below. **WARNING: Special care should be taken in the installation, inspection and repair of pressure containing devices such as valves and hydrants. FAILURE TO FOLLOW PROPER PRACTICE AND GUIDELINES CAN RESULT IN SERIOUS INJURY OR DEATH. High pressure and water hammer, due to rapid opening or closing of a hydrant or valve, can also cause major damage to the hydrant, valve, water main, fire hose, or other attached equipment.**

Receiving Inspection

On receipt, inspect for direction of opening, correct nozzle threads and operating nuts and shipping damage.

Report any problems to carrier, note on bill of lading and have the driver sign your copy.

Installation

1. When hydrants are received, they should be handled carefully to avoid breakage and damage to flanges. Keep hydrants closed until they are installed. Protect stored hydrants from the elements.
2. **Before installation of hydrant, clean piping, base and drain ring of hydrant of any rocks, sand and/or foreign material. Check for loose bolts at base, ground line and cover. Tighten if necessary.**
3. Hydrants shall be located as shown or as directed and in a manner to provide complete accessibility, and also in such a manner that the possibility of damage from vehicles or injury to pedestrians will be minimized. Locate hydrants as detailed in AWWA M17 and/or in accordance with applicable fire codes, the requirements of local fire authority, or the applicable municipal design standard.
4. All hydrants shall stand plumb and shall have their nozzles parallel with or at right angles to the curb, with the pumper nozzle facing the curb, except that hydrants having two hose nozzles 90° apart shall be set with each nozzle facing the curb at the angle of 45°. Hydrants shall be set to the established grade, with nozzles at least 18 inches above the ground, as shown or as directed by the engineer.
5. It is recommended practice to install an auxiliary or secondary gate valve in the lateral between the hydrant and the main to permit inspection and repair of the hydrant without shutting down mains. The use of AMERICAN Flow Control Series 2500 Resilient Wedge Gate Valves are recommended.
6. On traffic hydrants, surrounding soil must be adequately compacted around the barrel to support the lower barrel against transferring the force of a vehicular impact to the base. If the soil is too sandy and will not support the loads, pour a concrete pad around the barrel at or near the ground line at least 6 inches thick and 36 inches in diameter for barrel support.

   Whenever a hydrant is set in soil that is pervious, drainage shall be provided at the base of the hydrant by placing coarse gravel or crushed stone mixed with coarse sand, from the bottom of the trench to at least 6 inches above the drain opening in the hydrant and to a distance of 1 foot around the elbow.

   Whenever a hydrant is set in clay or other impervious soil, a drainage pit 2 feet in diameter and 3 feet deep shall be excavated below each hydrant and compactly filled with coarse gravel or crushed stone mixed with coarse sand under and around the elbow of the hydrant and to a level of 6 inches above the drain opening.

   Where there is a high ground water level or other conditions which prevent the use of hydrants with drains, "non-draining" hydrants should be used. Hydrants of this type are provided with either a solid seat and/or plugged drains and are marked to pump after use. This is especially important to avoid damage to the hydrant in areas where freezing temperatures are likely. Non-draining hydrants should be checked upon installation and during semi-annual inspections to make sure the hydrant stays dry inside the lower and upper barrel.
10. Restrain hydrant movement with appropriate thrust blocking or restrained joint to prevent pipe and/or joint separation. If a concrete thrust block is installed, care should be taken to prevent blocking the hydrant drains if they are to remain operable.
11. When first installed, the hydrant should be operated from full closed to full open position and back to make sure no obstructions are present.
12. After the line, as well as the hydrant, have been hydrostatically tested, the hydrant should be flushed and checked for proper drainage, if applicable.

4-1/2" AMERICAN-DARLING® MARK 73-5 TESTING

AMERICAN Flow Control recommends you follow the General Inspection and Installation Guidelines outlined in AWWA Manual M17 for Installation, Field Testing, and Maintenance of Fire Hydrants and/or as recommended below. ANSI/AWWA C502 permits dry barrel hydrants with unplugged drain outlets to have an allowable leakage of 5 fluid oz/min (0.25 mL/s) through the drain valve. Therefore, the hydrant should not be opened at the same time that the water main is tested. The auxiliary valve should be closed during water main tests (see ANSI/AWWA C600). If it is necessary to test the hydrant and water main at the same time, the installer may elect to temporarily plug the drain outlets by installing a non-draining seat. **WARNING: Special care should be taken in the installation, inspection and repair of pressure containing devices such as valves and hydrants. FAILURE TO FOLLOW PROPER PRACTICE AND GUIDELINES CAN RESULT IN SERIOUS INJURY OR DEATH. High pressure and water hammer, due to rapid opening or closing of a hydrant or valve, can also cause major damage to the hydrant, valve, water main, fire hose, or other attached equipment.** After the hydrant is installed and, when possible, before backfilling (and after pressure testing the water main), the hydrant should be tested as follows:

Pressure Test at Main Pressure

WARNING: FAILURE TO RELIEVE PRESSURE CAN RESULT IN THE CAP BLOWING OFF, CAUSING INJURY OR DEATH.

1. Remove an outlet nozzle cap and open the hydrant valve enough turns to close the drain. Allow the hydrant to fill until water is at the bottom of the outlet nozzle.
2. Replace the outlet nozzle cap and leave it loose to permit all air to escape.
3. After all air has escaped, tighten the outlet nozzle cap.
4. Open the hydrant completely. (Opening the hydrant fully before all the air has escaped will compress the air and cause a safety hazard.)
5. Check for leakage at all joints and outlet nozzles.
6. If leakage is noted, safely repair or replace the necessary components or the entire hydrant using the instructions found in this publication.
7. Repeat the test until results are satisfactory.

Pressure Test at Pressures Above Main Pressure

WARNING: FAILURE TO RELIEVE PRESSURE CAN RESULT IN THE CAP BLOWING OFF, CAUSING INJURY OR DEATH.

1. Connect a pressure test pump to one of the hydrant's outlet nozzles.
2. Open an outlet nozzle cap. Open the hydrant valve a few turns. Allow the hydrant to fill until the water level is at the bottom of the outlet nozzle.
3. After all the air has escaped, tighten the outlet nozzle cap.
4. Open the hydrant completely.
5. Close the auxiliary valve.
6. Safely pump up to the test pressure but do not exceed the rated working pressure of the hydrant or system components.
7. Check for leakage at all joints and outlet nozzles.
8. Safely repair or replace hydrant, if necessary, using the instructions found in this publication.
9. Repeat the test until results are satisfactory.
10. Close the hydrant and relieve pressure. Open the auxiliary valve.

4-1/2" AMERICAN-DARLING® MARK 73-5 TESTING

Drainage Test for Dry Barrel Hydrants(Draining -Type)

WARNING: FAILURE TO RELIEVE PRESSURE CAN RESULT IN THE CAP BLOWING OFF, CAUSING INJURY OR DEATH.

1. Following the pressure test, close the hydrant main valve.
2. Carefully remove one outlet nozzle cap and place the palm of one hand over the outlet nozzle opening.
3. Drainage should be sufficiently rapid to create a noticeable suction.
4. If the hydrant fails the drainage test, replace and tighten the nozzle cap, partially open the hydrant (1 or 2-turns) with the outlet nozzle caps on to create a pressure that will flush and clear the drain assembly. If this fails to restore proper drainage, then the drain assembly should be removed and inspected. If the drain assembly is clear, then the problem may be that the drain outlets is are plugged from outside the hydrant. Repair will require digging down around the outside of the hydrant and clearing the drain outlets.

Placing a Hydrant Into Service

1. After testing and backfilling, the hydrant should be safely flushed and tested to be sure that it is bacteriologically safe before it is put into service.
2. Tighten the outlet nozzle caps so they will not be excessively tight, but tight enough to prevent their removal by hand.
3. Clean the hydrant exterior to remove dirt accumulated during installation. Touch up any areas where factory coating was damaged during handling or installation. Use an appropriate top coating or contact factory for touch-up coatings.

4-1/2" AMERICAN-DARLING MARK 73-5 OPERATION, INSPECTION, AND MAINTENANCE

Operation View Video

AMERICAN Flow Control recommends you follow the general Inspection and Installation guidelines outlined in AWWA Manual M17 for Installation, Field testing, and Maintenance of Fire Hydrants and/or as recommended below. The thrust bearing hydrant requires a minimum of torque to operate. **WARNING: Special care should be taken in the installation, inspection and repair of pressure containing devices such as valves and hydrants. FAILURE TO FOLLOW PROPER PRACTICE AND GUIDELINES CAN RESULT IN SERIOUS INJURY OR DEATH. High pressure and water hammer, due to rapid opening or closing of a hydrant or valve, can also cause major damage to the hydrant, valve, water main, fire hose, or other attached equipment.** It is possible to damage the hydrant by forcing it beyond its limits of travel with excess torque; therefore:

1. Check direction of opening as marked on the hydrant cover.
2. To open, turn the operating nut until the main valve is fully open and the travel stop nut limits further opening. **Do not force the hydrant in the opening direction beyond fully-open as indicated by sudden resistance to turning**. If water does not flow when the hydrant is open, it is probably due to a closed valve upstream from the hydrant. Always open the hydrant completely, never only partially. A hydrant that is partially open will allow pressurized flow through the drain valve, which may wash away the soil from the area surrounding the base, or the partially open main valve may trap small stones or other debris between the valve seal and seat.
3. To close, turn the operating nut until the valve stops the flow. **It is not necessary to close this style of hydrant with great force.** Once the flow has stopped, turn the operating nut in the opening direction about 1/4 turn to take the strain off the operating parts of the hydrant. If the hydrant does not shut off completely, do not attempt to force the hydrant to close. Debris and small stones may be trapped in the valve seat and may be preventing the hydrant from closing. Partially open and close the hydrant several times to help dislodge the debris. If this does not work, safely remove the hydrant operating rod assembly, remove the debris and repair as detailed in subsequent sections of this manual.
4. **WARNING: FAILURE TO RELIEVE PRESSURE CAN RESULT IN THE CAP BLOWING OFF, CAUSING INJURY OR DEATH.** Make sure the auxiliary gate valve in the lateral between the main and the hydrant is closed and that the hydrant is not charged with pressure when removing caps.

Inspection

1. It is recommended that hydrants be inspected twice per year to ensure their satisfactory operation. After each use (especially in cold weather) hydrants should be specifically inspected for drainage.
2. Routine inspection should cover the points outlined in AWWA Manual M17 and include (but not be limited to) the following points:
   a. External inspection of paint, caps, chains, etc.
   b. Checking traffic type hydrants for damage to the breakaway feature.
   c. Using a listening device to check the main valve for leakage.
   d. Statically testing the hydrant to look for leakage at gaskets, caps, O-rings and drains.
   e. Verifying the hydrant drains properly.
   f. Cycling the hydrant from full open to full close.
   g. Check for routine lubrication needs which includes but may not be limited to loss of lubricant, nozzle caps and operating mechanism.
3. At time of inspection, flush the hydrant to remove any foreign material from the hydrant and the lateral. If necessary, flush the drains by filling the hydrant and then cycling open the main valve two times to force water out of the drains under pressure. If the hydrant is non-draining type, pump water out after flushing.

Maintenance

View Video

AMERICAN Flow Control strongly recommends that you follow routine maintenance on fire hydrants as outlined in AWWA Manual M17 for Installation, Field Testing, and Maintenance of Fire Hydrants. The ease of operation and the frequency of repair depends on the condition of the water system and the maintenance given. Dirt, gravel and other foreign material in the hydrant may prevent it from closing or draining properly, which may result in damage to the hydrant main valve. Under most operating conditions AMERICAN Flow Control recommends semi-annual lubrication and inspection of fire hydrants.

Note: Where grease is specified, use an AMERICAN Flow Control recommended food grade grease.

1. Twice per year, open the hydrant completely and flush for several minutes. Open and close valve to make sure it works properly, and check for leaks.
2. Remove a cap and verify that the hydrant is draining properly. After the main valve is closed, the water in the hydrant should drain rapidly. If it does not, the drain ports may be clogged. To clear drain ports, install nozzle cap, and tighten until water tight, then open hydrant two or three turns for several minutes. This will leave drain port partially open and permit water pressure to wash out the obstruction. If this method is unsuccessful, remove the operating rod assembly and clean the drain mechanism. If neither of above methods permits water to drain, it indicates that the drainage area around the hydrant base should be rebuilt.
3. If it is necessary to add lubricant, turn operating nut back from tight closed position until it turns freely, then remove pipe plug in top of operating nut and pump food grade grease into operating nut. DO NOT OVER PRESSURE LUBRICANT OR OVERFILL HYDRANT WITH LUBRICANT. FAILURE TO FOLLOW THESE INSTRUCTIONS WILL RESULT IN HARD OPERATION OF THE HYDRANT. SHOULD HARD OPERATION OCCUR REFER TO "TROUBLE SHOOTING GUIDE" DETAILED IN THIS MANUAL.
4. Remove all nozzle caps, clean rust or corrosion from threads of nozzles and caps, and replace cap gaskets if necessary. Apply a light coat of grease to nozzle threads before replacing cap.

4-1/2” AMERICAN-DARLING® MARK 73-5 TROUBLESHOOTING GUIDE

WARNING: Special care should be taken in the installation, inspection and repair of pressure containing devices such as valves and hydrants. FAILURE TO FOLLOW PROPER PRACTICE AND GUIDELINES CAN RESULT IN SERIOUS INJURY OR DEATH. High pressure and water hammer, due to rapid opening or closing of a hydrant or valve, can also cause major damage to the hydrant, valve, water main, fire hose, or other attached equipment.

Problem	Solution
1. Operating nut turns freely but hydrant does not open.	1. Inspect rod coupling for breakage and ensure rod pin is properly installed.
2. Hydrant will not shut off or ground around hydrant is highly saturated.	2. Close hydrant and remove nozzle cap. Check with listening device to determine if water is passing by main valve. If it is determined that the main valve is leaking, try the following: a. Flush hydrant in fully open position (watch to see if rocks or other foreign objects flush out of the barrel). b. After flushing for several minutes, shut off the hydrant. Watch for several minutes to see if flow stops. Place hand over open hose nozzle; suction should be felt, indicating hydrant is no longer leaking and drains are working properly. c. If flushing does not solve the problem, it would indicate that something is trapped or has cut the main valve rubber. Safely follow the seat removal instructions to replace the valve. Check threads on bronze seat to be sure that it is not damaged. If threads appear worn or bent, replace the bronze seat. d. If replacing the valve does not stop the leakage, bolting at the hydrant shoe may be loose or the base gasket is damaged. The hydrant must be excavated to make the repair.
3. External leakage is noticed around the operating nut.	3. This indicates that O-rings are cut or missing. Replace o-rings as referenced in the disassembly and repair instructions.

Problem	Solution
4. Operating nut is extremely hard to turn.	4. Try to turn the operating nut. If the nut turns, carefully turn the nut back from a tight closed position until it turns freely. Remove the pipe plug in the top of the operating nut. If necessary, add food grade grease to the operating nut. DO NOT OVERPRESSURE THE LUBRICANT OR OVERFILL THE HYDRANT WITH LUBRICANT. FAILURE TO FOLLOW THESE DIRECTIONS MAY RESULT IN HARD OPERATION OF THE HYDRANT. ALWAYS FULLY OPEN AND CLOSE THE HYDRANT AFTER LUBRICATING. Replace the pipe plug taking care to replace the thread sealant. The hydrant should cycle freely. If this does not solve the problem, remove the operating nut. Verify the hydrant has not been over lubricated and inspect the threads of the operating nut and upper rod. Inspect the ball bearing to ensure it is lubricated and is undamaged. Replace and/or lubricate the ball bearing if necessary. If this does not solve the problem, remove the hydrant seat and flush thoroughly, then reassemble. **Note: Where grease is specified, use an AMERICAN Flow Control recommended food grade grease.**
5. Water is dripping around nozzles.	5. Close hydrant and remove nozzle cap. Replace cap gasket. Check the nozzle to be sure it is properly installed.
6. Hydrant will not drain properly.	6. Check to be sure the water table has not risen too high to allow for drainage. Flush hydrant to be sure drains are clear. Open hydrant slowly several turns while leaving caps firmly in place to ensure hydrant drains are clear. Close hydrant and repeat this procedure. Do this slowly several times. If problem is not corrected, excavate the hydrant to see if concrete or other materials have blocked the drain outlets.

4-1/2" AMERICAN-DARLING® MARK 73-5 PARTS LIST

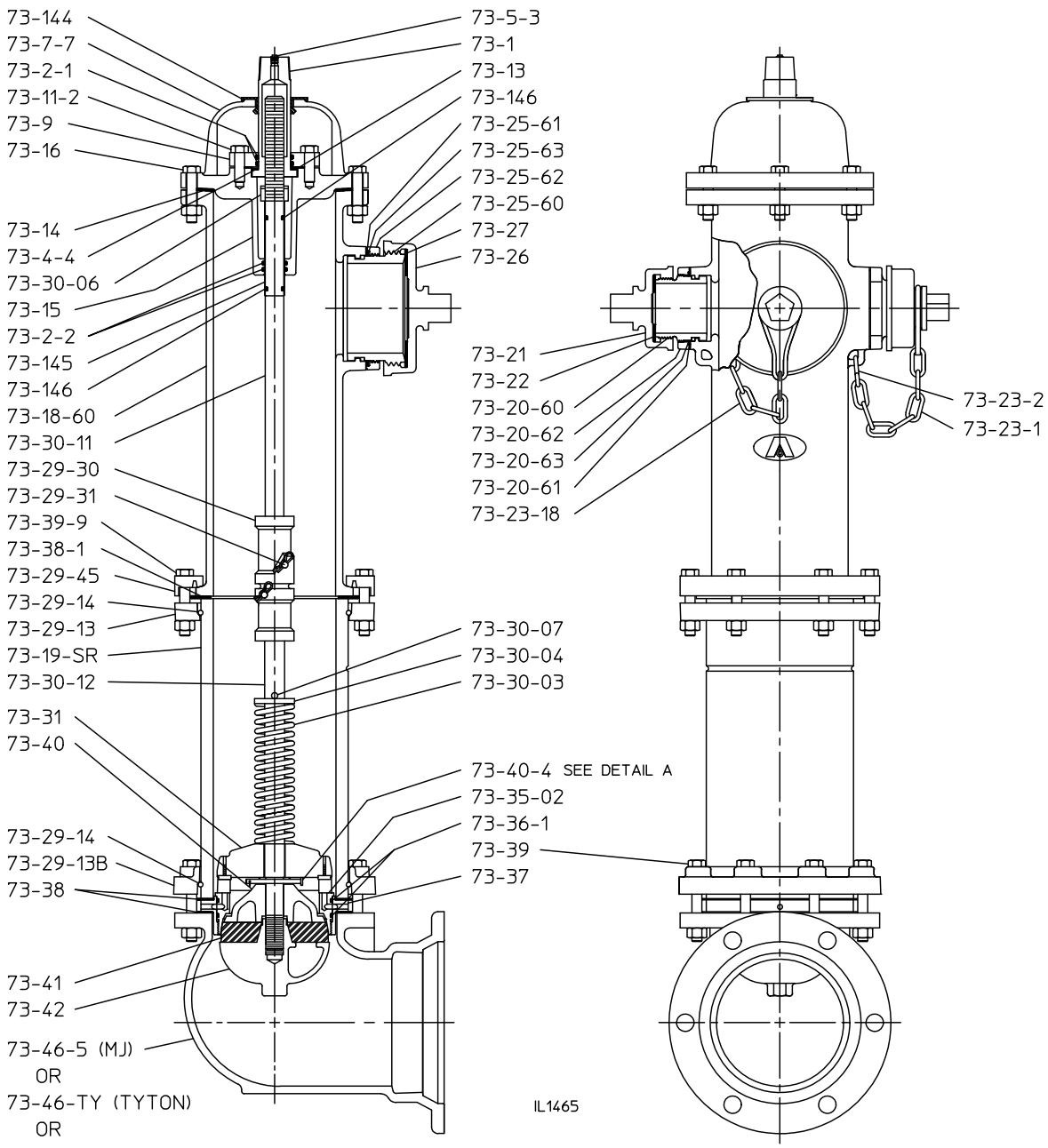

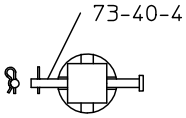

DETAIL A

TOP VIEW OF CLEVIS PIN & CLIP PIN USED TO SECURE HYDRANT VALVE ASSEMBLY

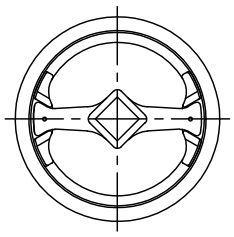

TOP VIEW OF SEAT AND DRAIN LEVER ASSEMBLY

4-1/2" AMERICAN-DARLING® MARK 73-5 PARTS LIST

Part No.	Qty.	Description	Material
73-1	1	Operating Nut	Bronze
73-2-1	2	Cover O-ring	Buna N
73-2-2	2	Housing O-ring	Buna N
73-4-4	1	Thrust Washer	Nylatron
73-5-3	1	Pipe Plug	Stainless Steel
73-7-7	1	Weather Cover	Gray Iron
73-9	1	Housing Cover	Gray Iron
73-11-2	4	Housing Cover Cap Screw	Plated Steel
73-13	1	Housing Cover Gasket	Fiber
73-14	1	Housing Gasket	Composition Rubber
73-15	1	Housing	Ductile Iron
73-16	6	Housing Bolt and Nut	Plated Steel
73-18-60	1	Upper Barrel	Ductile Iron
73-19-SR	1	Lower Barrel	Ductile Iron
73-20-60	2	Hose Nozzle	Bronze
73-20-61	2	Hose Nozzle O-ring Seal	Buna N
73-20-62	2	Hose Nozzle Retainer	Ductile Iron
73-20-63	2	Hose Nozzle Retainer Washer	Teflon
73-21	2	Hose Cap	See Note 8
73-22	2	Hose Cap Gasket	Rubber
73-23-1	1 Per Nozzle	Hose Cap Chain	Steel
73-23-2	1 Per Nozzle	S Hook	Steel
73-23-18	1 Per Nozzle	Pumper Cap Chain	Steel
73-25-60	1 or 0	Pumper Nozzle	Bronze
73-25-61	1 Per Nozzle	Pumper Nozzle O-ring Seal	Buna N
73-25-62	1 Per Nozzle	Pumper Nozzle Retainer	Ductile Iron
73-25-63	1 Per Nozzle	Pumper Nozzle Retainer Washer	Teflon
73-26	1 Per Nozzle	Pumper Cap	See Note 8
73-27	1 Per Nozzle	Pumper Cap Gasket	Rubber
73-29-13	1	Barrel Flange	Ductile Iron
73-29-13B	1	Base Flange	Ductile Iron
73-29-14	2	Snap Ring	Stainless Steel
73-29-30	1	Rod Coupling	Epoxy Coated Gray Iron
73-29-31	2	Rod Coupling Pin and Clip Pin	Stainless Steel
73-29-45	1	Breakable Flange	Gray Iron
73-30-03	1	Spring	Stainless Steel
73-30-04	1	Spring Plate	Stainless Steel
73-30-06	1	Travel Stop Nut	Bronze
73-30-07	1	Spring Plate Pin	Stainless Sreel
73-30-11	1	Upper Rod	Steel
73-30-12	1	Lower Rod	Steel
73-31	1	Drain Lever	Bronze
73-35-02	1	Hydrant Seat	Bronze
73-36-1	2	Hydrant Seat O-ring	Buna N
73-37	1	Drain Ring	Bronze
73-38	2	Drain Ring Gasket	Composition Rubber
73-38-1	1	Barrel Gasket	Composition Rubber
73-39	8	Base Bolt and Nut	Stainless Steel

4-1/2" AMERICAN-DARLING® MARK 73-5 PARTS LIST

Part No.	Qty.	Description	Material
73-39-9	8	Barrel Bolt and Nut	Plated Steel
73-40	1	Valve Top	Ductile Iron
73-40-1*	2	Valve Top Facing	Polyethylene
73-40-2*	4	Facing Screws	Steel
73-40-4	1	Valve Top Clevis and Clip Pin	Stainless Steel
73-41	1	Hydrant Valve	EPDM Rubber
73-42	1	Valve Bottom	Ductile Iron
73-46-2	1	Flanged Base	Ductile Iron
73-46-2A	1	Vertical Entry Base	Ductile Iron
73-46-5	1	Mechanical Joint Base	Ductile Iron
73-46-PE	1	Mechanical Joint Plain End Base	Ductile Iron
73-46-TY	1	TYTON® Base	Ductile Iron
73-46-6AA	1	ALPHA™ Restraint Joint Base	Ductile Iron
73-46-6AX	1	ALPHA™ XL Restraint Joint Base	Ductile Iron
73-144	1	Weather Shield	Rubber
73-145	1	Rod Sleeve	Bronze
73-146	2	Sleeve O-ring	Buna N
73-36-1	2	Hydrant Seat O-ring	Buna N

* parts use in MK73 & MK73-1 only

Notes

1. Size and shape of nut on operating nut and cap, threading on nozzles and caps, and the direction of opening made to specifications.
2. Cap chains are not furnished unless specified.
3. Working pressure 250 psig. Factory test pressure 500 psig.
4. Hydrant meets or exceeds the ANSI/AWWA C502 standard.
5. Upper barrel can be rotated 360°.
6. UL Listed and Approved by FM Approvals at 250 psig in allowable configurations.
7. Certified as complying with Certified to NSF/ANSI 61 and NSF/ANSI 372, which exhibit compliance with the U.S. Safe Drinking Water Act
8. National Standard and other common cap configurations are constructed of ductile iron. Other offerings may be constructed of gray cast iron.
9. Nominal turns to open is 19 1/2.
10. TYTON® is a registered trademark of United States Pipe and Foundry Co., LLC.
11. ALPHA™ is a trademark of Romac Industries, Inc. (U.S. Patent 8,894,100)

ALPHA restraint joints will accommodate the following pipe types and sizes:

ALPHA

- Ductile iron per AWWA C151
- PVC per ASTM D1785 (Schedule 40 and 80)
- PVC per ASTM D2241 (SDR 21)
- PVC per AWWA C900
- HDPE per AWWA C906 (SDR 9, 11, 13.5, and 17)

ALPHA XL

- Gray iron (Class A, B, C, and D)

Nominal Size (in)	ALPHA OD Range (in)	ALPHA XL OD Range (in)
6	6.60 - 7.00	6.90 - 7.10

MARK 73, 73-1, 73-2 & 73-5 VALVE COMPARISON

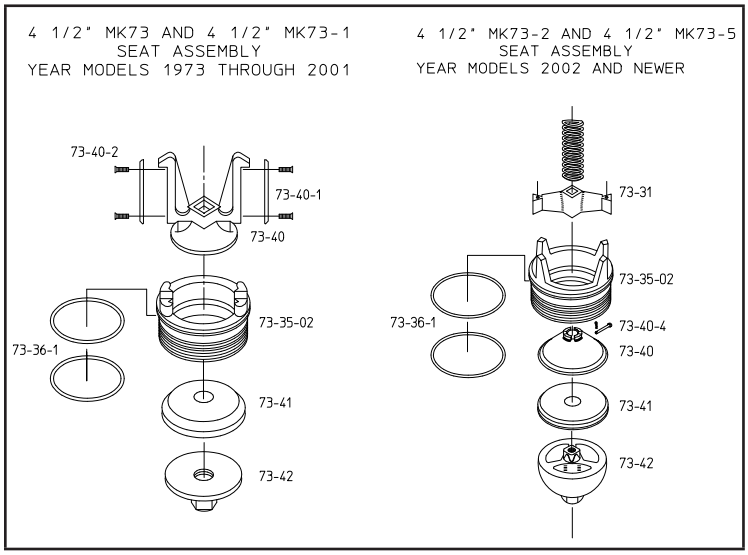

Spare Parts

Spare parts shall include the following:

O-ring for housing, O-ring for housing cover, O-ring for nozzles, barrel flange
gasket, base flange gasket, main valve seat gasket or O-ring, hydrant valve and cap gaskets.

Traffic model hydrants also include traffic repair kits.

4-1/2” AMERICAN-DARLING® MARK 73-5 REPAIR INSTRUCTIONS

Disassembling the Hydrant

View Video

WARNING: Special care should be taken in the installation, inspection and repair of pressure containing devices such as valves and hydrants. FAILURE TO FOLLOW PROPER PRACTICE AND GUIDELINES CAN RESULT IN SERIOUS INJURY OR DEATH. High pressure and water hammer, due to rapid opening or closing of a hydrant or valve, can also cause major damage to the hydrant, valve, water main, fire hose, or other attached equipment.

Removing Internal Parts

One person with hand tools and a lightweight seat wrench can quickly remove all the working parts, including hydrant valve, drain lever and hydrant seat. To repair, it is not necessary to excavate American-Darling hydrants; merely remove the internal parts.

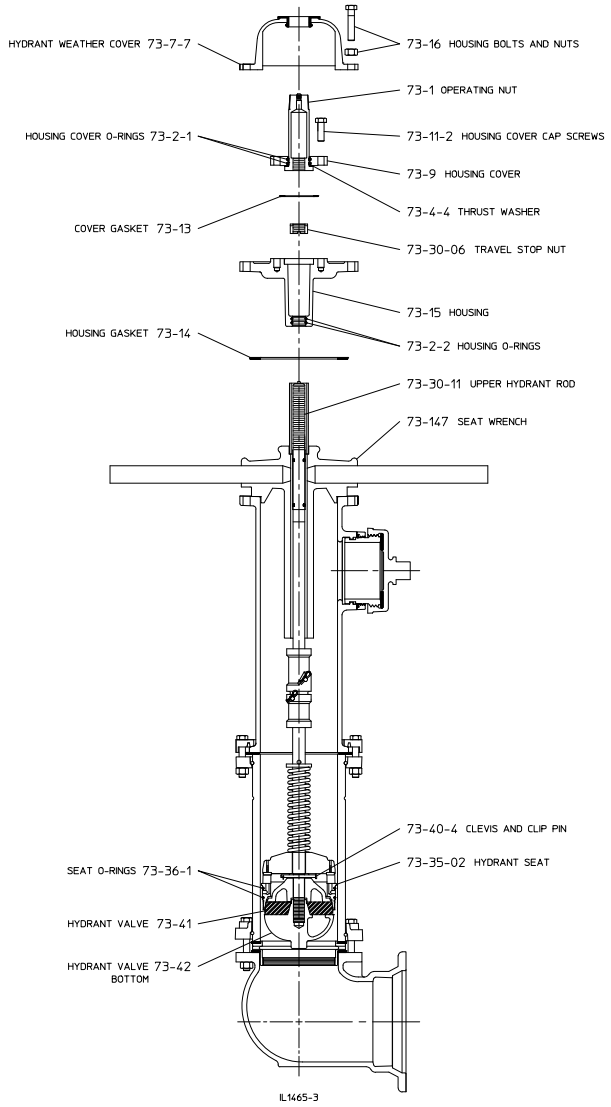

Directions for Removing Internal Parts of 4-1/2” AMERICAN-DARLING MARK 73-5 Hydrants

1. **Shut off water line leading to hydrant making sure the hydrant is not under pressure. FAILURE TO FOLLOW PROPER PRACTICE AND GUIDELINES CAN RESULT IN SERIOUS INJURY OR DEATH.**
2. Partially open hydrant valve to relieve trapped pressure.
3. Standing to the side of the hydrant and away from the direction of the hydrant cap(s), loosen one fo the hose caps to relieve any pressure that may be present in the hydrant barrel. Close hydrant valve. From full open to full close takes approximately 17 1/2 turns.
4. Remove hydrant weather cover (73-7-7) with weather shield by removing two bolts and nuts (73-16).
5. Remove the four housing cover cap screws (73-11-2) on housing cover (73-9).
6. Unscrew and remove operating nut (73-1) from upper hydrant rod (73-30-11) together with housing cover (73-9) and thrust washer (73-4-4).
7. Use top of seat wrench to unscrew and remove travel stop nut (73-30-06).
8. Remove remaining housing bolts (73-16) then lift out housing (73-15). Inspect O-rings and replace if necessary. Special care must be taken to avoid damaging O-rings (73-2-2).
9. Place seat wrench over upper hydrant rod (73-30-11) and turn to the left (counterclockwise) to unscrew bronze hydrant seat (73-35-02) and lift out hydrant rod with completely assembled internal working parts attached, including hydrant seat, hydrant valve, drain lever and seat O-rings.

NOTE: When a supply of gaskets and O-rings are available, always install new ones when reassembling the hydrant. Clean dirt from O- ring grooves.

Reassembling the Hydrant

View Video

WARNING: Special care should be taken in the installation, inspection and repair of pressure containing devices such as valves and hydrants. FAILURE TO FOLLOW PROPER PRACTICE AND GUIDELINES CAN RESULT IN SERIOUS INJURY OR DEATH. High pressure and water hammer, due to rapid opening or closing of a hydrant or valve, can also cause major damage to the hydrant, valve, water main, fire hose, or other attached equipment.

1. When the hydrant valve is replaced, pin the valve ball assembly in place with the clevis and clip pin (73-40-4). Tighten lower valve bottom (73-42) to 145 ft-lbs. of torque. Advance slot in the valve top (73-40) to next pin location.
2. Thread the valve assembly (parts 73-40, 73-41, 73-42) to the lower hydrant rod. Grease the seat O-rings (73-36-1) and lower the parts through the hydrant barrel.
3. When the assembly has made contact with the drain ring (73-37), push the assembly straight down. To avoid cross threading, turn the seat wrench counterclockwise until an ajar is felt. This ajar indicates that the thread starts are properly aligned.
4. Turn the seat wrench clockwise approximately seven turns until it is tight. Pull upward on the rod to ensure it is securely fastened to the drain ring (73-37). Replace the housing gasket (73-14).
5. Grease the threads on the upper hydrant rod (73-30-11) and the O-rings (73-2-2) in the housing.
6. Slip the housing (73-15) over the rod. Note: Special care should be taken to avoid damaging housing O-rings. Thread the travel stop nut (73-30-06) onto the upper rod until contact is made with the brass rod sleeve. Care should be taken to not over tighten the travel stop nut or damage can occur to the sleeve.
7. Put the cover gasket (73-13) in place and then thread the bronze operating nut (73-1) onto the rod.
8. Bolt up the housing (73-15) using approximately 60 ft-lbs of torque.
9. Tighten the operating nut with the operating wrench and put the cover cap screws (73-11-2) in place. Then replace the weather cover (73-7-7) and bolt it up properly using approximately 60 ft-lbs of torque.
10. Carefully pressurize the hydrant and check for visual leaks.

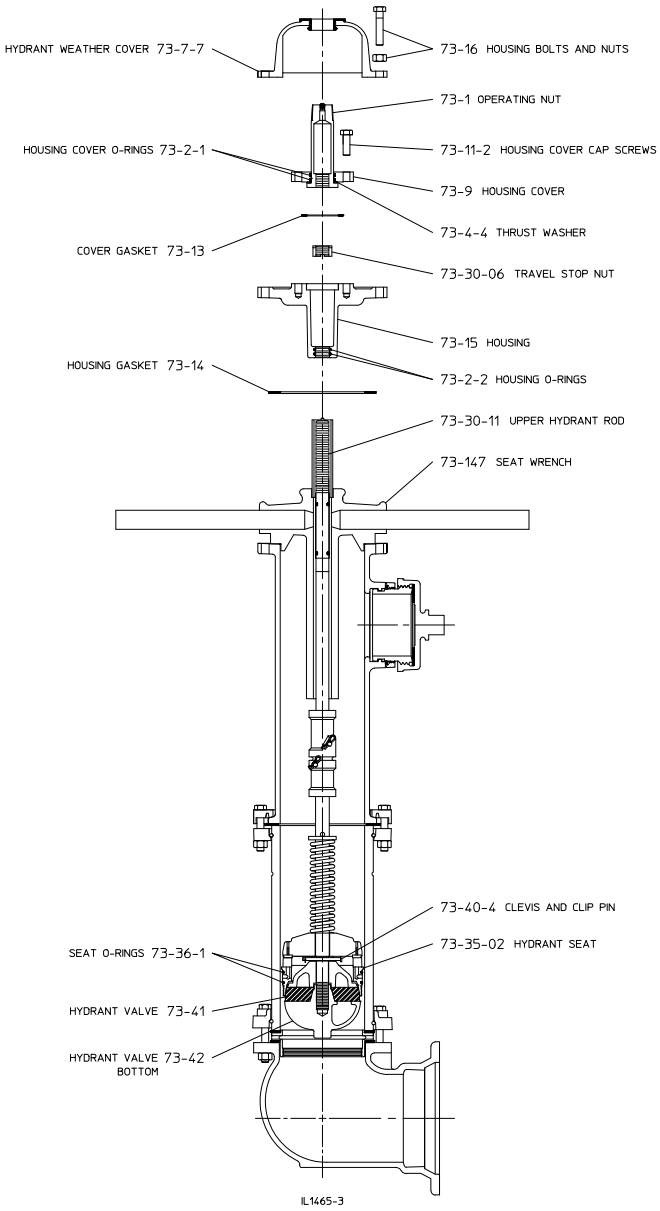

Note: Where grease is specified, use an AMERICAN Flow Control recommended food grade grease.

4-1/2" AMERICAN-DARLING® MARK 73-5 TRAFFIC DAMAGE REPAIR

View Video

WARNING: Special care should be taken in the installation, inspection and repair of pressure containing devices such as valves and hydrants. FAILURE TO FOLLOW PROPER PRACTICE AND GUIDELINES CAN RESULT IN SERIOUS INJURY OR DEATH. High pressure and water hammer, due to rapid opening or closing of a hydrant or valve, can also cause major damage to the hydrant, valve, water main, fire hose, or other attached equipment.

Should a hydrant be struck by a vehicle such that the upper barrel is seperated/broken from the lower barrel, the following procedure should be followed to reassemble the hydrant and make it operational. (A traffic damage repair kit for

1. Although it is possible to repair break features of the hydrant under pressure, the extent of a traffic impact may be unknown. It is considered safe practice to close the auxilliary valve ahead of the hydrant, or use another means to cut off flow and pressure to the hydrant.
2. Inspect the upper barrel (73-18-60) to determine if any of the components are fractured. Traffic impact usually results in a fractured traffic flange (73-29-45), broken or bent flange bolts (73-39-9), a fractured rod coupling (73-29-30) and damage to the gasket between the upper and lower barrels (73-38-1). Should cracking or fracture of any component occur, it should be replaced.
3. The operating nut (73-1) should be rotated to verify that it turns smoothly and easily and that the hydrant rod is centered in the barrel. (Should there be any binding or difficulty in turning the operating nut, the upper barrel should be disassembled and inspected for damaged parts.)
4. Remove the broken coupling (73-29-30) and verify that the upper valve rod (73-30-11) is not bent or damaged.
5. Inspect the lower barrel (73-19-SR) and clean any dirt or debris from the gasket seating surface.
6. Inspect the lower barrel flange (73-29-13) to determine that it will receive the new bolts contained in the traffic damage repair kit.
7. Turn the operating nut to place the hydrant in the full open position; this will extend the upper hydrant rod and ease the replacement of the rod coupling (73-29-30). Remove the broken rod coupling segment from the lower valve rod and verify that the rod end will receive the new coupling.
8. Orient the new rod coupling such that the end with the word "TOP" is placed on the upper hydrant rod such that the hole in the coupling aligns with the half hole on the hydrant rod. Lock coupling in place with stainless steel coupling pin (73-29-31) and clip pin.
9. Lift the upper barrel assembly and position it over the lower barrel while aligning the hydrant rod coupling on the upper hydrant rod with the lower hydrant rod such that the hole in the coupling aligns with the half hole on the lower hydrant rod. Slide the coupling over the lower valve rod and insert coupling pin and clip pin. Lift upper barrel assembly to ensure upper and lower rods are connected to coupling.
10. Turn operating nut in the closing direction which will lower the upper barrel onto the lower barrel. Rotate the hydrant to position the hose and pumper nozzles in the desired orientation to the curb. Be careful to position the barrel gasket (73-38-1) to achieve full coverage of the end faces of the upper and lower barrels. Install new traffic flanges (73-29-45). (Note: While lowering the upper section onto the lower section, a pinch point exists. Keep fingers clear.)
11. After nuts have been started on all bolts, tighten the flange bolts in an alternating pattern to a torque value of between 55 and 60 ft-lbs.
12. Once the hydrant has been reassembled, it is essential that it be operated to determine that it is fully functional via the following procedure.
13. Open the auxiliary or secondary gate valve in the lateral to allow water pressure to the hydrant.
14. The hose and pumper caps should be tightened and the operating nut turned in the open direction. After cracking the valve seat open, the operating nut should rotate freely without binding.

Traffic Damage Repair Kit Parts		
73-29-31	2	Rod Coupling and Clip Pin
73-29-30	1	Breakable Rod Coupling
73-29-45	2	Traffic Flange
73-38-1	1	Barrel Gasket

4-1/2" AMERICAN-DARLING® MARK 73 AMLOK NOZZLE REPLACEMENT (FOR HYDRANTS BUILT PRIOR TO 2006)

View Video

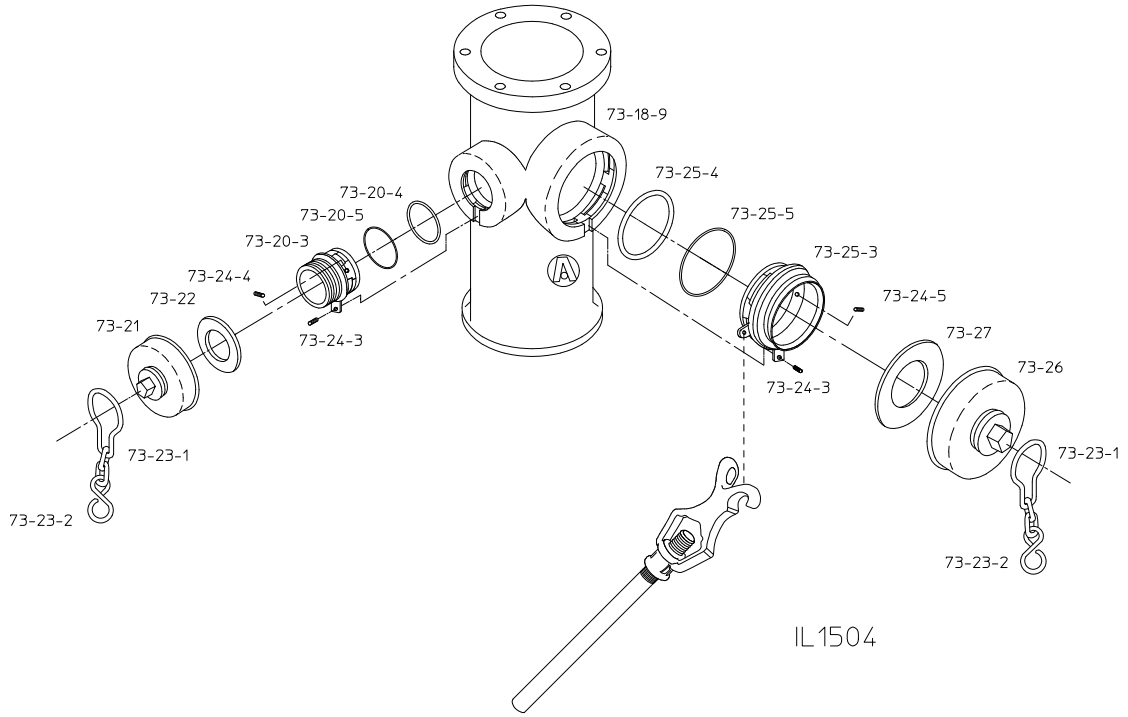

Amlok Nozzle Replacement

WARNING: POTENTIAL HYDRANT CAP HAZARD. FAILURE TO RELIEVE PRESSURE CAN RESULT IN THE CAP BLOWING OFF, CAUSING SERIOUS INJURY OR DEATH. Make sure the auxiliary gate valve in the lateral between the main and the hydrant is closed and that the hydrant is not charged with pressure when removing caps.

Step 1

Remove the nozzle cap. Remove the 5/16 in. internal set screw (73-24-4 or 73-24-5) with a 5/32 in. hex head allen wrench. Unscrew the 5/16 in. external slotted screw (73-24-3) out of the lug on the nozzle.

Step 2

Use a universal spanner wrench or AMERICAN Flow Control nozzle wrench to rotate nozzle 1/8 turn clockwise. The nozzle can now be pulled from the hydrant barrel.

Step 3

Remove O-ring gasket from the nozzle boss. Insert new O-ring and lubricate with food grade grease. Place the nozzle spacer O-ring (73-20-5) or (73-25-5) on the nozzle directly behind the nozzle collar. Place a small amount of lubricant on the plain end of the new nozzle.

Note: Where grease is specified, use an AMERICAN Flow Control recommended food grade grease.

Step 4

Insert the new nozzle into the hydrant barrel with the tapped lug at the 7:30 position. Push the nozzle home and rotate counterclockwise until the nozzle stops.

Step 5

Insert the 5/16 in, slotted nozzle set screw (73-24-3) into the tapped lug on the nozzle. Tighten the set screw into the slot on the hydrant barrel to remove any play in the nozzle. The top of the set screw should be flush with the surface of the nozzle lug.

Step 6

Start internal set screw (73-24-4) or (73-24-5) into the threaded hole inside the nozzle. Apply Loctite Thread Sealant #545 or equivalent to the external threads of the set screw. Continue to turn the set screw into the threaded hole with a 5/32 in. hex head allen wrench until it stops. DO NOT TIGHTEN. Replace the nozzle cap and hydrostatically test the hydrant.

4-1/2” AMERICAN-DARLING® MARK 73-5 NOZZLE REPLACEMENT MECHANICALLY ATTACHED PUMPER NOZZLE (FOR HYDRANTS BUILT BEGINNING IN 2006)

View Video

WARNING: POTENTIAL HYDRANT CAP HAZARD. FAILURE TO RELIEVE PRESSURE CAN RESULT IN THE CAP BLOWING OFF, CAUSING SERIOUS INJURY OR DEATH. Make sure the auxiliary gate valve in the lateral between the main and the hydrant is closed and that the hydrant is not charged with pressure when removing caps.

Removal

1. Remove cap.
2. Place wrench on the retainer so it engages the rounded protrusions and unthread from nozzle.

   Note: Removal of the 4 in. and 5 in. Storz hydrant nozzle requires the use of the hinged pumper nozzle retainer wrench (AMERICAN Flow Control Part No. 82766).
3. Rotate nozzle counterclockwise until the four lugs on the nozzle disengage the recesses in the nozzle section socket which will allow the nozzle to be removed.

Installation

1. Thread retainer onto the retainer threads of the pumper nozzle.
2. Place washer over nozzle starting from the end with the four lugs and into the chamfer recess in the retainer.
3. Grease O-ring and place it over nozzle starting from the end with the four lugs and against the washer. Insert the nozzle/retainer/washer/O-ring subassembly into the socket in the nozzle section. Rotate the subassembly clockwise until it stops with the four lugs on the nozzle fully engaged in the anti-rotation recesses in the socket. If it cannot be rotated, turn the retainer in a direction to allow the nozzle to be inserted further into the socket so the subassembly rotates clockwise against the stops.
4. Hand tighten the retainer to press O-ring against the face of the socket.
6. Place wrench on the retainer so it engages the rounded protrusions, tighten firmly.
7. Note: Installation of the 5” Storz hydrant nozzle requires the use of the hinged pumper nozzle retainer wrench (AMERICAN Flow Control Part No. 82766).
8. Clean rust or corrosion from cap threads and replace cap gasket if necessary. Apply a light coat of grease to the nozzle threads and install the cap.

   Cap all nozzles and open the hydrant valve, check the area around the repaired nozzle for leaks.

   NOTE: Where grease is specified, use an AMERICAN Flow Control recommended food grade grease.

Mechanically Attached Pumper Nozzle

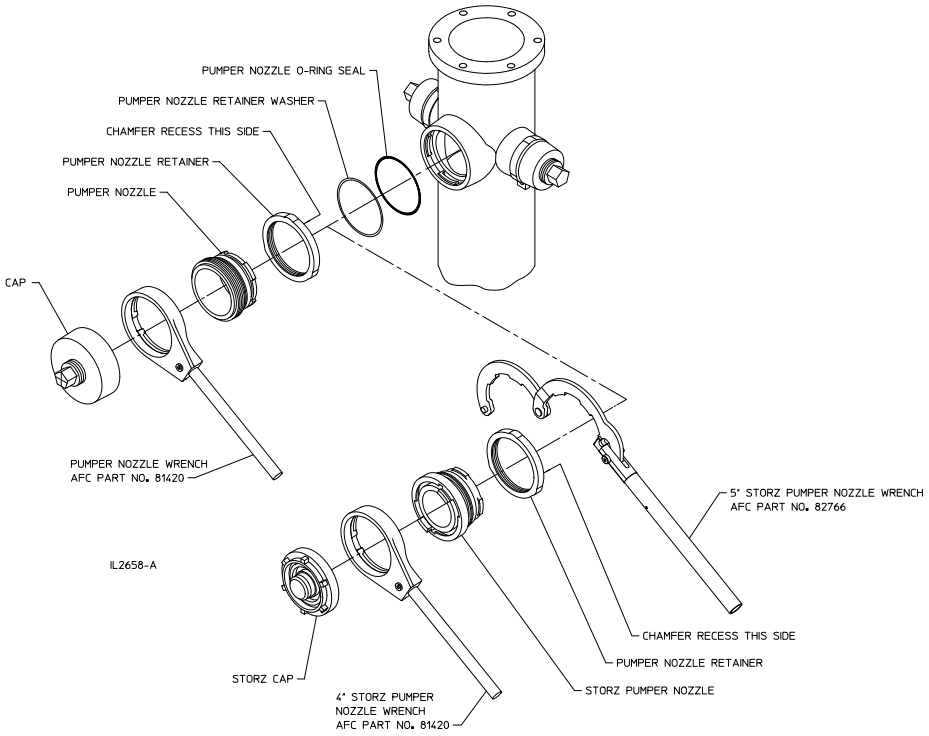

4-1/2" AMERICAN-DARLING® MARK 73-5 NOZZLE REPLACEMENT MECHANICALLY ATTACHED 2-1/2" HOSE NOZZLE (FOR HYDRANTS BUILT BEGINNING IN 2006)

View Video

WARNING: POTENTIAL HYDRANT CAP HAZARD. FAILURE TO RELIEVE PRESSURE CAN RESULT IN THE CAP BLOWING OFF, CAUSING SERIOUS INJURY OR DEATH. Make sure the auxiliary gate valve in the lateral between the main and the hydrant is closed and that the hydrant is not charged with pressure when removing caps.

Removal

1. Remove cap.
2. Place wrench on the retainer so it engages the rounded protrusions and unthread from nozzle.
3. Rotate nozzle counterclockwise until the two lugs on the nozzle disengage the recesses in the nozzle section socket, which will allow the nozzle to be removed.

Installation

1. Thread retainer onto the retainer threads of the hose nozzle. NOTE: In cases where hose nozzle threads having a larger diameter than the retainer, the retainer will need to be assembled from the lug side only.
2. Place washer over nozzle starting from the end with the two lugs and into the chamfer recess in the retainer.
3. Grease O-ring and place it over nozzle starting from the end with the two lugs and against the washer.
4. Insert the nozzle /retainer/washer/O-ring subassembly into the socket in the nozzle section. Rotate the subassembly clockwise until it stops with the lugs on the nozzle fully engaged in the anti-rotation recesses in the socket. If it cannot be rotated, turn the retainer in a direction to allow the nozzle to be inserted further into the socket so the subassembly rotates clockwise against the stops.
5. Hand tighten the retainer to press O-ring against the face of the socket.
6. Place Hose Nozzle Wrench on Retainer so it engages the rounded protrusions, and tighten firmly. Apply no more than 190 ft-lbs. of torque.
7. Clean rust or corrosion from cap threads and replace cap gasket if necessary. Apply a light coat of grease to the nozzle threads and install the cap.

   NOTE: Where grease is specified, use an AMERICAN Flow Control recommended food grade grease.

Mechanically Attached Hose Nozzle

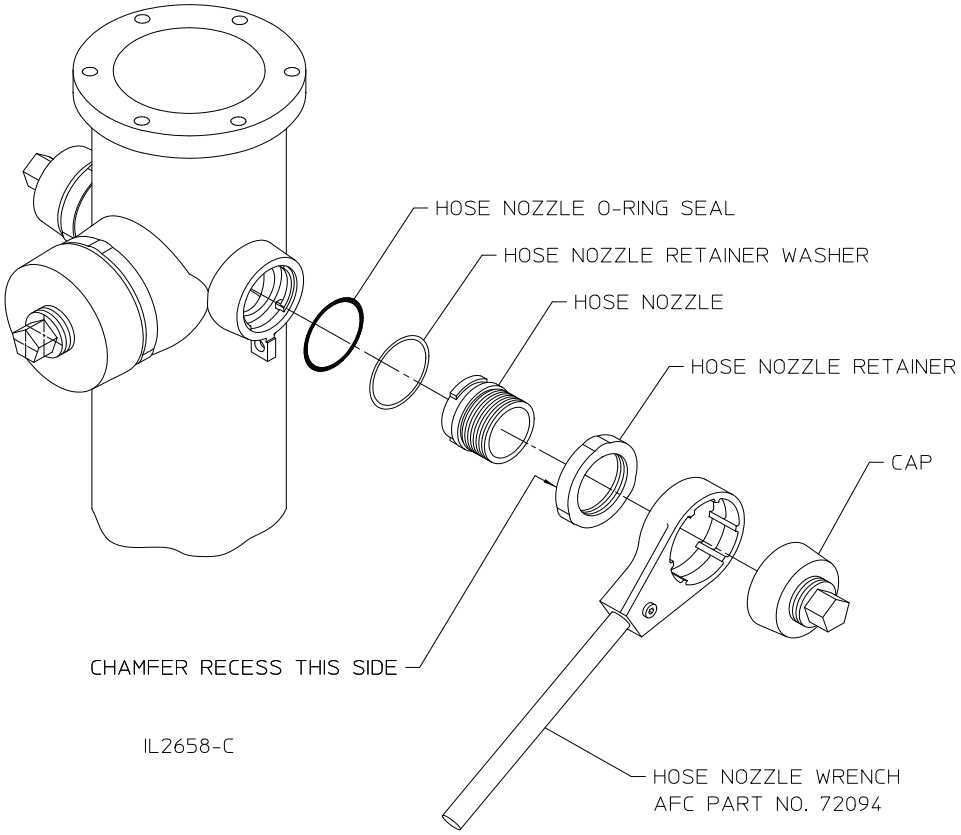

4-1/2” AMERICAN-DARLING® MARK 73-5 EXTENSION INSTRUCTIONS

View Video

The **4-1/2” AMERICAN-DARLING MARK 73-5** hydrant is extended at the barrel flange above the ground line, eliminating the need for excavation.

Parts Required for Hydrant Extension

73-19X-SR	1	Extension Barrel*
73-29-13	2	Unbreakable Flanges
73-29-14	2	Snap Rings
73-29-31	2	Rod Coupling Pins
73-29-40	1	Unbreakable Rod Coupling
73-30-15	1	Extension Rod
73-38-1	2	Barrel Gaskets
73-39-9	8	Barrel Bolts and Nuts

*Extension barrels and rods are available in increments of 6 in., starting at 6 in. long.

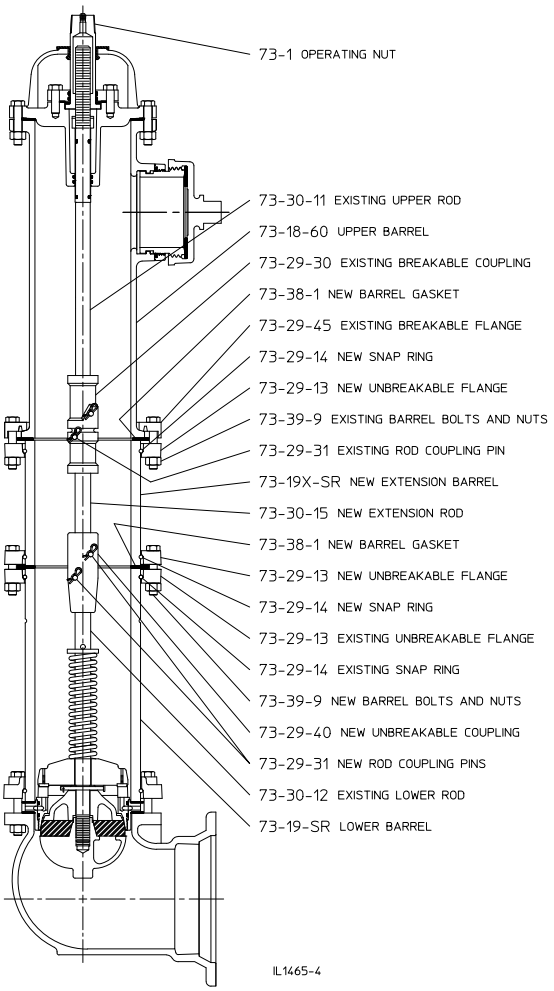

NOTE: The use of extension lengths made by more than one extension kit is not recommended. When combined extension kit and existing trench depth exceeds 9 ft, replace existing lower rod with appropriate length lower rod instead of using rod extension. When combined length exceeds 12 ft rod guides are recommended for lower rod.

Procedure

1. Close hydrant valve. It is considered safe practice to close the auxiliary valve ahead of the hydrant, or use another means to cut off flow and pressure to the hydrant. Always standing to the side of the hydrant and away from the direction of the hydrant caps, loosen one of the hose caps to relieve any pressure that may be present in the hydrant barrel. **WARNING: FAILURE TO RELIEVE PRESSURE CAN RESULT IN THE CAP BLOWING OFF, CAUSING SERIOUS INJURY OR DEATH.**
2. Remove existing barrel bolts and nuts (73-39-9).
3. Remove existing traffic barrel flange halves (73-29-45).
4. Raise upper barrel (73-18-60) from lower barrel (73-19-SR) by turning operating nut (73-1) in the opening direction and lifting the upper barrel at the same time to prevent the hydrant valve from opening.
5. Raise the upper barrel until there is sufficient separation from the lower barrel to permit removing of the lower rod coupling pin (73-29-31) and clip pin. **Block upper barrel in this position to ensure protection while removing the coupling pins.**
6. Safely remove lower rod coupling pin and clip pin. Lift and remove upper barrel assembly. **Use proper lifting techniques to avoid injury.**
7. Assemble new unbreakable rod coupling (73-29-40) to one end of the new extension rod (73-30-15) in position as shown. Insert a new coupling pin (73-29-31) and clip pin. Assemble other end of new unbreakable rod coupling to existing lower rod (73-30-12) using a new coupling pin (73-29-31) and clip pin.
8. Remove old gasket and place new barrel gasket (73-38-1) on lower barrel.
9. Place assembly on lower barrel making sure gasket and hydrant barrel inside diameters are aligned.
10. Assemble new barrel bolts and nuts (73-39-9). Torque in an alternating pattern to 80 ft-lbs.
11. Place new barrel gasket (73-38-1) on extension barrel. Lift upper assembly and attach existing breakable rod coupling (73-29-30) to new extension rod (73-30-15). **Use proper lifting techniques to avoid injury.**
12. **Block the upper barrel assembly as in Step 5** and insert a new coupling pin (73-29-31) and clip pin in the existing breakable rod coupling (73-29-30).
13. Lower upper barrel assembly to the extension barrel by turning operating nut in the closing direction, making sure gasket remains centered. Lift barrel flange and assemble breakable flange halves by using existing barrel bolts and nuts (73-39-9). Torque in an alternating pattern to 55-60 ft-lbs. Important: **Make sure gap between barrel flange (73-29-45) and new barrel flange (73-29-13) is equal around circumference of flanges.**
14. Safely shell test hydrant for joint tightness.

4-1/2” AMERICAN-DARLING® MARK-73-5 SPECIFICATIONS

Fire hydrants shall meet or exceed ANSI/AWWA C502, latest revision. Rated working pressure shall be 250 psig, test pressure shall be 500 psig and hydrants shall include the following specific design criteria:

- The main valve closure shall be of the compression type.
- Traffic feature must be designed for easy 360 rotation of nozzle section during field installation.
- The main valve opening shall not be less than 4-1/2 in. and be designed so that removal of all working parts can be accomplished without excavating.
- The hydrant valve shall be constructed of EPDM rubber and have a vertical taper of 20° or less.
- The bronze seat shall be threaded into an all bronze drain ring.
- The draining system of the hydrant shall be bronze and positively activated by the main operating rod. Hydrant drains shall close completely after no more than three turns of the operating nut. There shall be a minimum of two internal ports and four outlets to the exterior of the hydrant. Drain shutoff to be direct compression closure. Sliding drains are not permitted.

  Hydrant barrels shall be made of ductile iron. Nozzles shall be retained by collars. Threaded-in nozzles and nozzles using set screws, are not allowed.
- Hydrant upper barrel shall be factory coated with Electrodeposition (E-coat) epoxy primer and catalyzed two part polyurethane top coating. Base shall be coated with fusion bonded epoxy. All bolting below grade shall be 304 stainless steel.
- Friction loss not to exceed 3.5 psig at 1000 gpm through 4-1/2 in. pumper nozzle.
- Hydrants shall be equal to the **4-1/2” American-Darling MARK-73-5** by AMERICAN Flow Control fire hydrant.

INDEX

5-1/4" AMERICAN - DARLING® B-84-B-5 FIRE HYDRANT

Page

INTRODUCTION AND HISTORY 1B-2

ORDERING

Dimensions:

Overall Hydrant 1B-3

Optional Bases 1B-4

Operating Nut Sizes 1B-5, 1B-6

Weights 1B-7

Friction Loss 1B-8

Submittal Sheet 1B-9

INSTALLATION AND TESTING

Installation 1B-10

Testing 1B-11, 1B-12

OPERATION AND MAINTENANCE

Operation and Maintenance 1B-12, 1B-13

Troubleshooting Guide 1B-14, 1B-15

REPAIRS

Parts List 1B-16, 1B-17, 1B-18

Spare Parts 1B-18

Repair Instructions 1B-19, 1B-20

Traffic Damage Repair 1B-21

Nozzle Replacement 1B-22

Mechanically Attached Nozzles 1B-23, 1B-24

EXTENDING

Extension Instructions 1B-25

SPECFICATIONS 1B-26

5-1/4" AMERICAN-DARLING® B-84-B-5 FIRE HYDRANT

View Video

The 5-1/4" American-Darling B-84-B-5 hydrant incorporates over 100 years of experience in design, manufacture and field experience. This means dependable and efficient operation when needed.

Introduced in 1984, the **5-1/4" American-Darling B-84-B-5** hydrant is rated at 250 psig and is seat tested at 500 psig. The hydrant meets or exceeds all requirements of ANSI/AWWA C502 for dry barrel hydrants.

The **5-1/4" American-Darling B-84-B-5** hydrant has all the features you expect from a high quality fire hydrant. The epoxy primer and polyurethane top coat system on external surfaces of the upper barrel provide a durable, high-gloss finish that will continue to look good for years without repainting. The all bronze seat and bronze drain ring assure that the **5-1/4" American-Darling B-84-B-5** hydrant is easily repaired.

Optional UL-FM in Allowable Configurations

The **5-1/4" American-Darling B-84-B-5** hydrant is UL Listed by UL as meeting their standard UL 246, latest edition. FM Approvals has Approved the **5-1/4" American-Darling B-84-B-5**. Both UL and FM Approvals require that we consistently manufacture and test our hydrants in compliance with their stringent requirements. Our facilities are subject to periodic inspections to assure we are in compliance with their standards.

5-1/4" AMERICAN-DARLING® B-84B-5 DIMENSIONS

Depth of Trench	Length of Lower Rod
2' -0"	21.50"
2' -6"	27.50"
3' -0"	33.50"
3" -6"	39.50"
4' -0"	45.50"
4' -6"	51.50"
5' -0"	57.50"
5' -6"	63.50"
6' -0"	69.50"
6' -6"	75.50"
7' -0"	81.50"
7' -6"	87.50"
8' -0"	93.50"
8' -6"	99.50"
9' -0"	105.50"
9' -6"	111.50"
10' - 0"	117.50"
10' -6"	123.50"
11' -0"	129.50"
11' -6"	135.50"
12' -0"	141.50"
12' -6"	147.50"
13' -0"	153.50"
13' -6"	159.50"
14' -0"	165.50"
14' -6"	171.50"
15' -0"	177.50"
15' -6"	183.50"
16' -0"	189.50"
16' -6"	195.50"
17' -0"	201.50"
17' -6"	207.50"
18' -0"	213.50"
18' -6"	219.50"
19' -0"	225.50"
19' -6"	231.50"

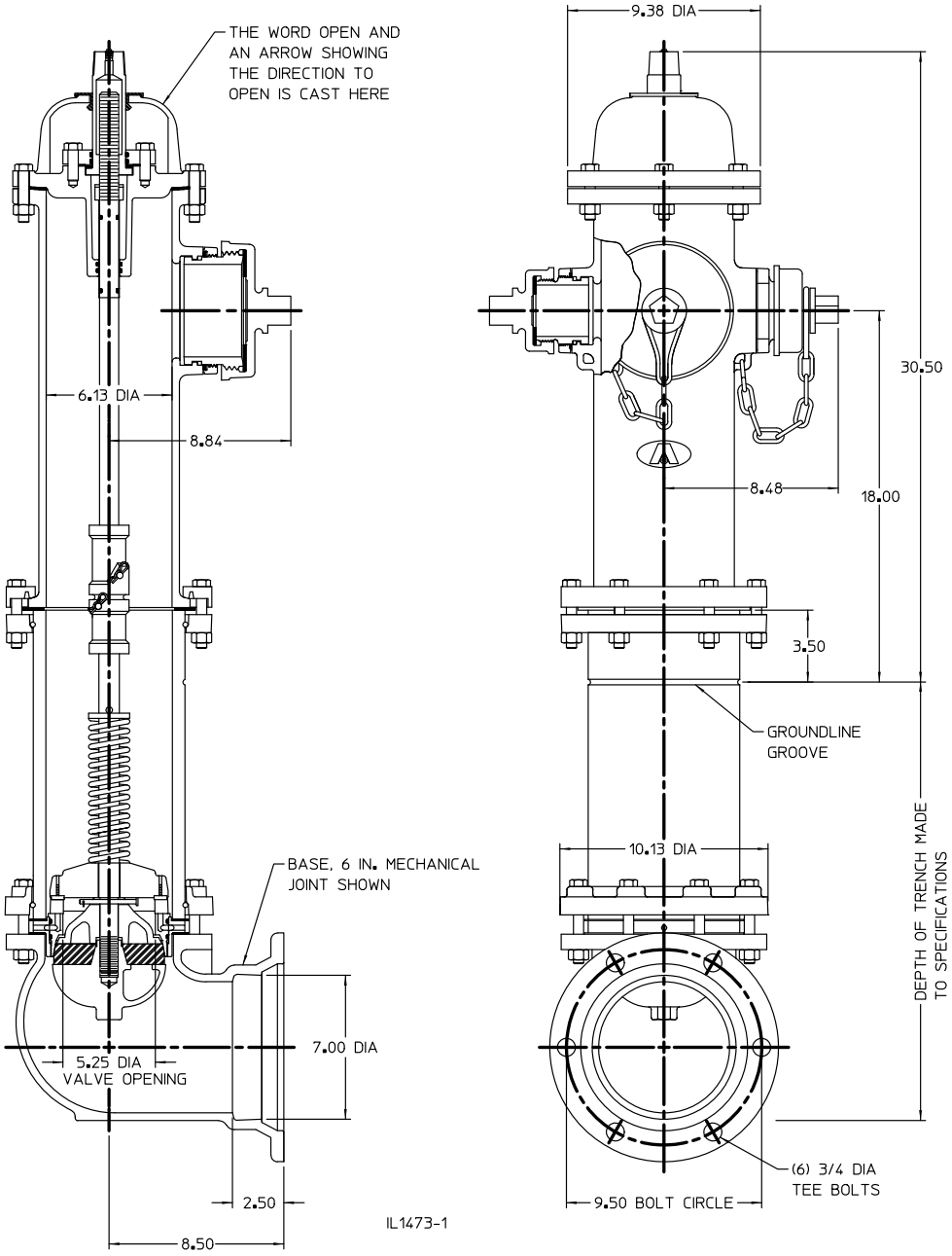

NOTES:

1. Depth of trench is the nominal distance from ground line to bottom of connecting pipe.
2. Size and shape of nut on operating nut and cap, threading on nozzles and caps, and the direction of opening made to specifications.
3. Cap chains are not furnished unless specified.
4. Working pressure 250 psig, test pressure 500 psig.
5. Hydrant meets or exceeds the ANSI/AWWA C502 standard.
6. Upper barrel can be rotated 360 degrees.
7. UL Listed and Approved by FM Approvals at 250 psig in allowable configurations.
8. Certified to NSF/ANSI Standard 61 and NSF/ANSI 372.

5-1/4" AMERICAN-DARLING® B-84-B-5 DIMENSIONS, OPTIONAL BASES

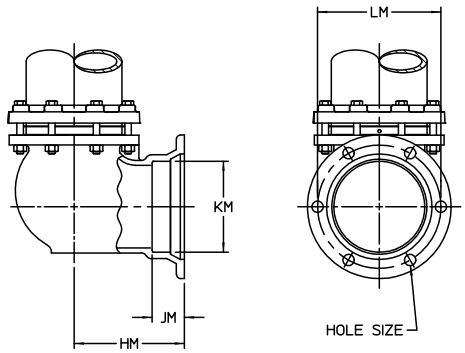

SIZE	HM	JM	KM	LM	HOLES	
					NO.	SIZE
4	8.50	2.50	4.91	7.50	4	7/8
6	8.50	2.50	7.03	9.50	6	7/8
8	10.25	2.50	9.18	11.75	6	7/8

MECHANICAL JOINT BASE

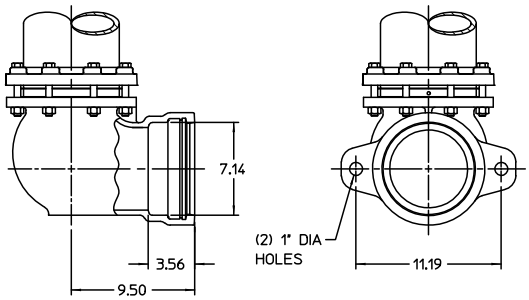

6" TYTON BASE WITH LUGS

TYTON® is a registered trademark of United States Pipe and Foundry Co., LLC.

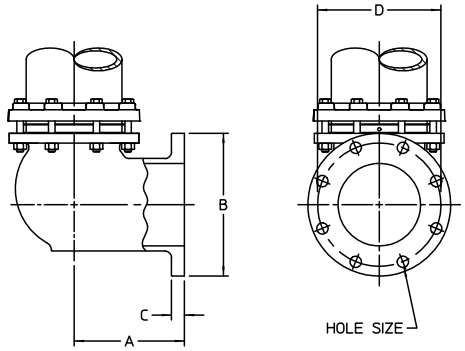

SIZE	A	B	C	D	HOLES	
					NO.	SIZE
4	8.00	9.00	0.94	7.50	8	3/4
6	8.50	11.00	1.00	9.50	8	7/8

FLANGED BASE

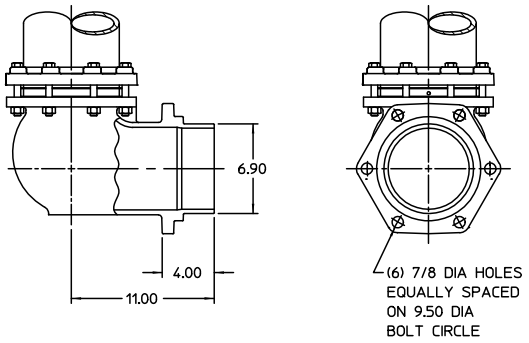

6" PLAIN END W/INTEGRAL MJ GLAND BASE

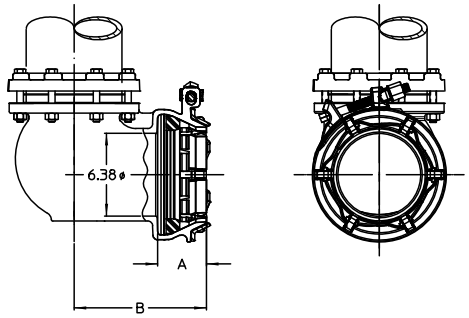

JOINT	A	B
ALPHA™	3.75	10.19
ALPHA™ XL	4.042	10.48

6" ALPHA™ AND ALPHA™ XL BASE

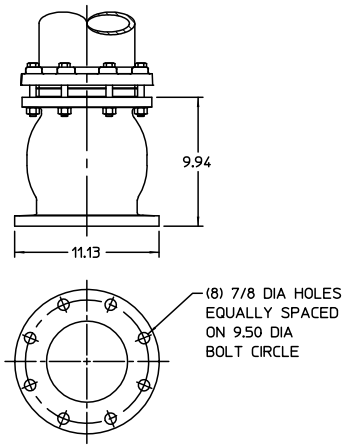

6" FLANGED VERTICAL ENTRY BASE

ALPHA™ is a trademark of Romac Industries, Inc. (U.S. Patent 8,894,100)

IL1473-2A

5-1/4" AMERICAN-DARLING® B-84-B-5 OPERATING NUT SIZES

Square "A" **Pentagon "B"** **Hexagon "C"** **Triangle "D"**

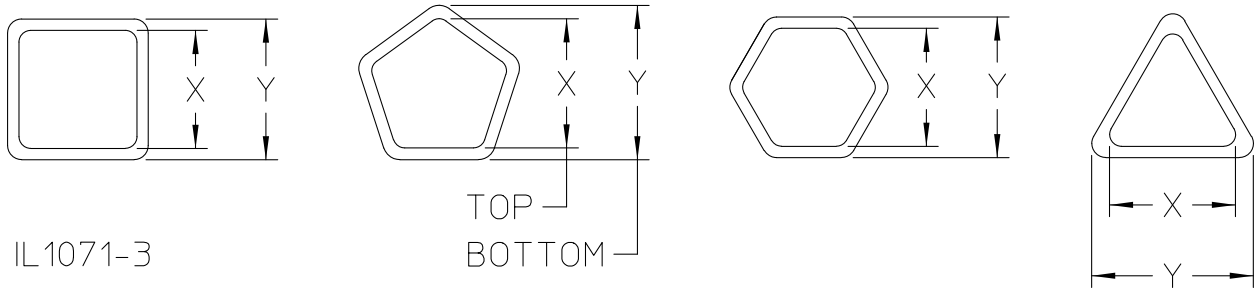

NOTES:
1. Operating nut furnished L.H. opening (counterclockwise) or R.H. (clockwise)
2. Cap nuts 1.125 high.

Nut Shape	American-Darling Nut No.	X	Y
Square "A"	A-1	.750	.812
	A-2	.750	.875
	A-3	.812	.875
	A-8	.875	.938
	A-9	.875	1.000
	A-12	.938	1.000
	A-13	.938	1.062
	A-16	1.000	1.062
	A-17	1.062	1.125
	A-19	1.125	1.188
	A-23	1.188	1.188
	A-24	1.188	1.250
	A-38	.750	.750
	A-41	1.125	1.125
Pentagon "B"	B-2	1.000	1.000
	B-3	1.000	1.062
	B-5	1.062	1.125
	B-11	1.125	1.188
	B-12	1.125	1.312
	B-13	1.125	1.375
	B-18	1.188	1.250
	B-23	1.250	1.250
	B-24	1.250	1.312
	B-26	1.250	1.375
	B-27	1.250	1.500
	B-31	1.312	1.375

5-1/4" AMERICAN-DARLING® B-84-B-5 OPERATING NUT SIZES

Nut Shape	American-Darling Nut No.	X	Y
Pentagon "B"	B-34	1.375	1.438
	B-35	1.375	1.500
	B-36	1.375	1.750
	B-41	1.438	1.500
	B-49	1.500	1.562
	B-50	1.500	1.625
	B-54	1.562	1.625
	B-69	1.125	1.250
	B-74	1.375	1.375
	B-75	.812	.875
	B-76	1.812	1.875
Hexagon "C"	C-1	1.062	1.125
	C-2	1.125	1.188
	C-5	1.188	1.188
	C-6	1.188	1.250
	C-8	1.312	1.375
	C-10	1.375	1.438
	C-15	1.438	1.500
	C-18	1.500	1.500
	C-22	1.250	1.312
	C-23	1.000	1.000
Triangle "D"	D-1	1.375	1.375
	D-2	1.375	1.375
	D-3	1.750	1.812

5-1/4” AMERICAN-DARLING® B-84-B-5 WEIGHTS WITH 6” MECHANICAL JOINT BASE AND ACCESSORIES (GLAND, GASKET AND HARDWARE)

TWO HOSE AND ONE PUMPER NOZZLE	
TRENCH DEPTH	**WEIGHT (LBS)**
3’-0”	305
3’-6”	335
4’-0”	355
4’-6”	375
5’-0”	395
5’-6”	415
6’-0”	435
6’-6”	455
7’-0”	475
7’-6”	495
8’-0”	515
8’-6”	535
9’-0”	555
9”-6”	575
10’-0”	595

Add or deduct 20 lbs for each 6 in. variance in bury depth.

Add for: 6 in. Flanged base - 30 lbs

Deduct for: Two hose nozzles only - 25 lbs

5-1/4" American-Darling B-84-B-5
Hydrant Flow vs. Friction Loss

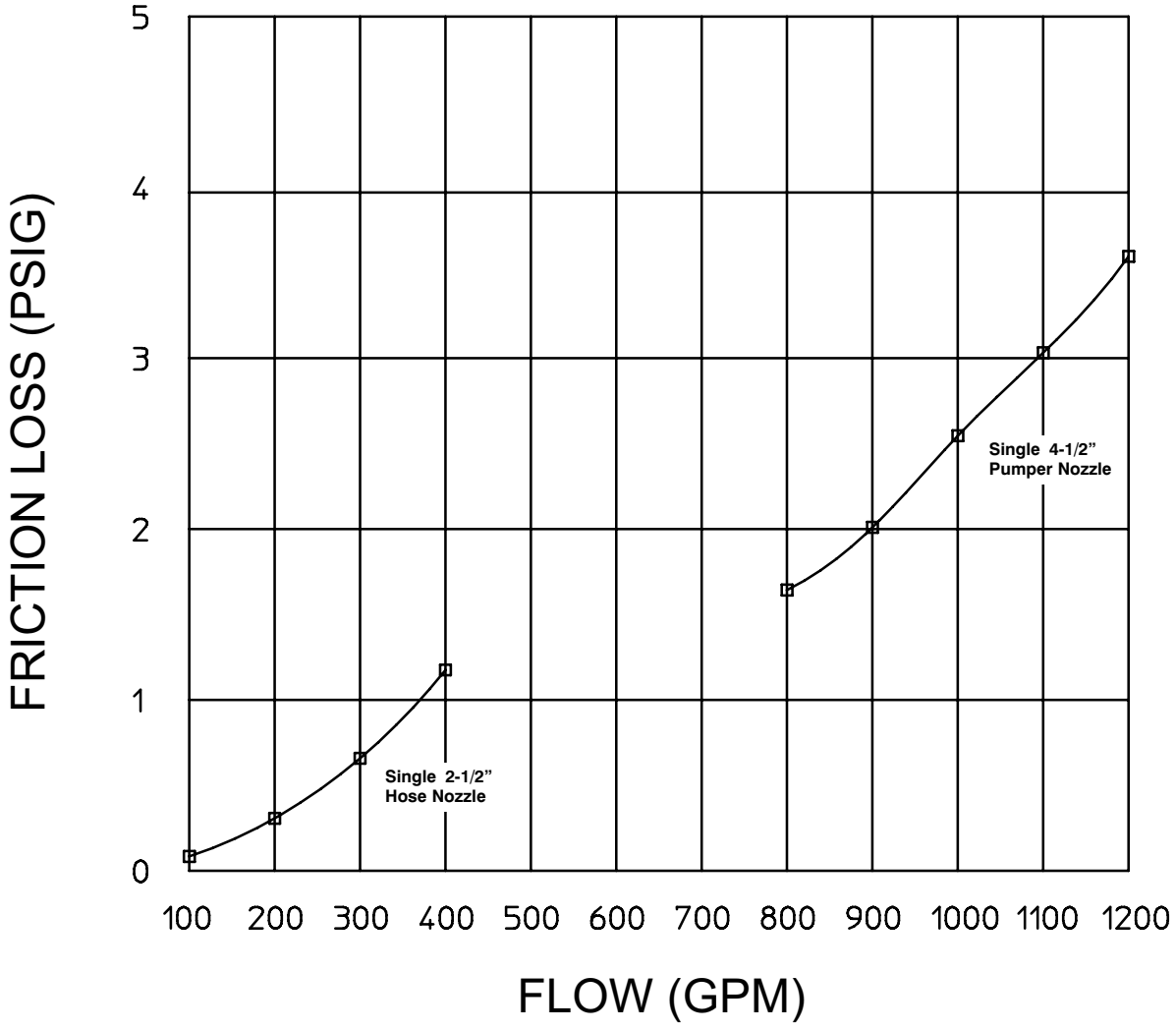

AMERICAN Flow Control®
5-1/4" AMERICAN-DARLING® B-84-B-5 FIRE HYDRANT
SUBMITTAL SHEET

City Specification: _____ Quantity: _____		
Direction to Open: ☐ Left (C.C.W.) ☐ Right (C.W.)		
Operating Nut Size: _____ Shape _____ American Darling No. (If Known) _____		
Nozzles		
Configuration: (Check One)	**Pumper Nozzle:**	**Hose Nozzle:**
☐ Two Hose, One Pumper ☐ Two Hose	Storz: 4 in. 5 in. National Std ☐ Yes ☐ No Size ___ _____ _____ _____ Pitch Dia x _____T.P.I. _____ O. D. American-Darling Thread (If Known) _____ _____ _____ _____	National Std ☐ Yes ☐ No Size ___ _____ _____ _____ _____ Pitch Dia x _____T.P.I. _____ O. D. American -Darling Thread (If Known) _____ _____ _____ _____
Nozzle Cap Chains: ☐ Yes ☐ No		
Depth of Trench:		
Base Connection: (Check One) ☐ 4" MJ ☐ 6" MJ ☐ 8" MJ ☐ 4" Class 125 Flange ☐ 6" Class 125 Flange ☐ 6" TYTON® ☐ 6" Plain End with Intergral MJ Gland ☐ 6" Vertical Entry ☐ 6" ALPHA™ ☐ 6" ALPHA ™ XL		
Paint Color: _____ _____ _____		
UL Listed, FM Approved: ☐ Yes ☐ No		
Other Requirements: (List)		

AMERICAN Flow Control
American-Darling & Waterous
A Division of AMERICAN

NOTES:

1. Meets or exceeds requirements of ANSI/AWWA C502, latest revision, with 250 psig rated working pressure.
2. UL Listed and Approved by FM Approvals at 250 psig in allowable configurations.
3. Certified to NSF/ANSI 61 and NSF/ANSI 372.
4. TYTON® is a registered trademark of United States Pipe and Foundry Co., LLC.
5. ALPHA™ is a trademark of Romac Industries, Inc. (U.S. Patent 8,894,100)

Visit our website at http://www.american-usa.com/afc

5-1/4" AMERICAN-DARLING® B-84-B-5 INSTALLATION

This instruction is issued as a recommendation to the customer for the proper use of the AMERICAN Flow Control manufactured fire hydrants. AMERICAN recommends you follow the general Inspection and Installation guidelines outlined in AWWA Manual *M17 for Installation, Field Testing, and Maintenance of Fire Hydrants* and/or as recommended below. **WARNING: Special care should be taken in the installation, inspection and repair of pressure containing devices such as valves and hydrants. FAILURE TO FOLLOW PROPER PRACTICE AND GUIDELINES CAN RESULT IN SERIOUS INJURY OR DEATH. High pressure and water hammer, due to rapid opening or closing of a hydrant or valve, can also cause major damage to the hydrant, valve, water main, fire hose, or other attached equipment.**

Receiving Inspection

On receipt, inspect for direction of opening, correct nozzle threads and operating nuts and shipping damage.

Report any problems to carrier, note on bill of lading and have the driver sign your copy.

Installation

1. When hydrants are received, they should be handled carefully to avoid breakage and damage to flanges. Keep hydrants closed until they are installed. Protect stored hydrants from the elements.
2. **Before installation of hydrant, clean piping, base and drain ring of hydrant of any rocks, sand and/or foreign material. Check for loose bolts at base, ground line and cover. Tighten if necessary.**
3. Hydrants shall be located as shown or as directed and in a manner to provide complete accessibility, and also in such a manner that the possibility of damage from vehicles or injury to pedestrians will be minimized. Locate hydrants as detailed in AWWA M17 and/or in accordance with applicable fire codes, the requirements of local fire authority, or the applicable municipal design standard.
4. All hydrants shall stand plumb and shall have their nozzles parallel with or at right angles to the curb, with the pumper nozzle facing the curb, except that hydrants having two hose nozzles 90° apart shall be set with each nozzle facing the curb at the angle of 45°. Hydrants shall be set to the established grade, with nozzles at least 18 in. above the ground, as shown or as directed by the engineer.
5. It is recommended practice to install an auxiliary or secondary gate valve in the lateral between the hydrant and the main to permit inspection and repair of the hydrant without shutting down mains. The use of AMERICAN Flow Control Series 2500 Resilient Wedge Gate Valves are recommended.
6. On traffic hydrants, surrounding soil must be adequately compacted around the barrel to support the lower barrel against transferring the force of a vehicular impact to the base. If the soil is too sandy and will not support the loads, pour a concrete pad around the barrel at or near the ground line at least 6 inches thick and 36 inches in diameter for barrel support.
7. Whenever a hydrant is set in soil that is pervious, drainage shall be provided at the base of the hydrant by placing coarse gravel or crushed stone mixed with coarse sand, from the bottom of the trench to at least 6 inches above the drain opening in the hydrant and to a distance of 1 foot around the elbow.
8. Whenever a hydrant is set in clay or other impervious soil, a drainage pit 2 feet in diameter and 3 feet deep shall be excavated below each hydrant and compactly filled with coarse gravel or crushed stone mixed with coarse sand under and around the elbow of the hydrant and to a level of 6 inches above the drain opening.
9. Where there is a high ground water level or other conditions which prevent the use of hydrants with drains, "non-draining" hydrants should be used. Hydrants of this type are provided with either a solid seat and/or plugged drains and are marked to pump after use. This is especially important to avoid damage to the hydrant in areas where freezing temperatures are likely. Non-draining hydrants should be checked upon installation and during semi-annual inspections to make sure the hydrant stays dry inside the lower and upper barrel.
10. Restrain hydrant movement with appropriate thrust blocking or restrained joint to prevent pipe and/or joint separation. If a concrete thrust block is installed, care should be taken to prevent blocking the hydrant drains if they are to remain operable.
11. When first installed, the hydrant should be operated from full closed to full open position and back to make sure no obstructions are present.
12. After the line, as well as the hydrant, have been hydrostatically tested, the hydrant should be flushed and checked for proper drainage, if applicable.

5-1/4" AMERICAN-DARLING® B-84-B-5 TESTING

AMERICAN Flow Control recommends you follow the General Inspection and Installation Guidelines outlined in AWWA Manual M17 for Installation, Field Testing, and Maintenance of Fire Hydrants and/or as recommended below. ANSI/AWWA C502 permits dry barrel hydrants with unplugged drain outlets to have an allowable leakage of 5 fluid oz/min (0.25 mL/s) through the drain valve. Therefore, the hydrant should not be opened at the same time that the water main is tested. The auxiliary valve should be closed during water main tests (see ANSI/AWWA C600). If it is necessary to test the hydrant and water main at the same time, the installer may elect to temporarily plug the drain outlets by installing a non-draining seat. **WARNING: Special care should be taken in the installation, inspection and repair of pressure containing devices such as valves and hydrants. FAILURE TO FOLLOW PROPER PRACTICE AND GUIDELINES CAN RESULT IN SERIOUS INJURY OR DEATH. High pressure and water hammer, due to rapid opening or closing of a hydrant or valve, can also cause major damage to the hydrant, valve, water main, fire hose, or other attached equipment.** After the hydrant is installed and, when possible, before backfilling (and after pressure testing the water main), the hydrant should be tested as follows:

Pressure Test at Main Pressure

WARNING: FAILURE TO RELIEVE PRESSURE CAN RESULT IN THE CAP BLOWING OFF, CAUSING INJURY OR DEATH.

1. Remove an outlet nozzle cap and open the hydrant valve enough turns to close the drain. Allow the hydrant to fill until water is at the bottom of the outlet nozzle.
2. Replace the outlet nozzle cap and leave it loose to permit all air to escape.
3. After all air has escaped, tighten the outlet nozzle cap.
4. Open the hydrant completely. (Opening the hydrant fully before all the air has escaped will compress the air and cause a safety hazard.)
5. Check for leakage at all joints and outlet nozzles.
6. If leakage is noted, safely repair or replace the necessary components or the entire hydrant using the instructions found in this publication.
7. Repeat the test until results are satisfactory.

Pressure Test at Pressures Above Main Pressure

WARNING: FAILURE TO RELIEVE PRESSURE CAN RESULT IN THE CAP BLOWING OFF, CAUSING INJURY OR DEATH.

1. Connect a pressure test pump to one of the hydrant's outlet nozzles.
2. Open an outlet nozzle cap. Open the hydrant valve a few turns. Allow the hydrant to fill until the water level is at the bottom of the outlet nozzle.
3. After all the air has escaped, tighten the outlet nozzle cap.
4. Open the hydrant completely.
5. Close the auxiliary valve.
6. Safely pump up to the test pressure but do not exceed the rated working pressure of the hydrant or system components.
7. Check for leakage at all joints and outlet nozzles.
8. Safely repair or replace hydrant, if necessary, using the instructions found in this publication.
9. Repeat the test until results are satisfactory.
10. Close the hydrant and relieve pressure. Open the auxiliary valve.

5-1/4" AMERICAN-DARLING® B-84-B-5 TESTING

Drainage Test for Dry Barrel Hydrants (Draining Type)

WARNING: FAILURE TO RELIEVE PRESSURE CAN RESULT IN THE CAP BLOWING OFF, CAUSING INJURY OR DEATH.

1. Following the pressure test, close the hydrant main valve.
2. Carefully remove one outlet nozzle cap and place the palm of one hand over the outlet nozzle opening.
3. Drainage should be sufficiently rapid to create a noticeable suction.
4. If the hydrant fails the drainage test, replace and tighten the nozzle cap, partially open the hydrant (1 or 2-turns) with the outlet nozzle caps on to create a pressure that will flush and clear the drain assembly. If this fails to restore proper drainage, then the drain assembly should be removed and inspected. If the drain assembly is clear, then the problem may be that the drain outlets are plugged from outside the hydrant. Repair will require digging down around the outside of the hydrant and clearing the drain outlets.

Placing a Hydrant Into Service

1. After testing and backfilling, the hydrant should be safely flushed and tested to be sure that it is bacteriologically safe before it is put into service.
2. Tighten the outlet nozzle caps so they will not be excessively tight, but tight enough to prevent their removal by hand.
3. Clean the hydrant exterior to remove dirt accumulated during installation. Touch up any areas where factory coating was damaged during handling or installation. Use an appropriate top coating or contact factory for touch-up coatings.

5-1/4" AMERICAN-DARLING® B-84-B-5 OPERATION, INSPECTION, AND MAINTENANCE

Operation View Video

AMERICAN Flow Control recommends you follow the general Inspection and Installation guidelines outlined in AWWA Manual M17 for Installation, Field Testing, and Maintenance of Fire Hydrants and/or as recommended below. The thrust bearing hydrant requires a minimum of torque to operate. **WARNING: Special care should be taken in the installation, inspection and repair of pressure containing devices such as valves and hydrants. FAILURE TO FOLLOW PROPER PRACTICE AND GUIDELINES CAN RESULT IN SERIOUS INJURY OR DEATH. High pressure and water hammer, due to rapid opening or closing of a hydrant or valve, can also cause major damage to the hydrant, valve, water main, fire hose, or other attached equipment.** It is possible to damage the hydrant by forcing it beyond its limits of travel with excess torque; therefore:

1. Check direction of opening as marked on the hydrant cover.
2. To open, turn the operating nut until the main valve is fully open and the travel stop nut limits further opening. **Do not force the hydrant in the opening direction beyond fully-open as indicated by sudden resistance to turning**. If water does not flow when the hydrant is open, it is probably due to a closed valve upstream from the hydrant. Always open the hydrant completely, never only partially. A hydrant that is partially open will allow pressurized flow through the drain valve, which may wash away the soil from the area surrounding the base, or the partially open main valve may trap small stones or other debris between the valve seal and seat.
3. To close, turn the operating nut until the valve stops the flow. **It is not necessary to close this style of hydrant with great force.** Once the flow has stopped, turn the operating nut in the opening direction about 1/4 turn to take the strain off the operating parts of the hydrant. If the hydrant does not shut off completely, do not attempt to force the hydrant to close. Debris and small stones may be trapped in the valve seat and may be preventing the hydrant from closing. Partially open and close the hydrant several times to help dislodge the debris. If this does not work, safely remove the hydrant operating rod assembly, remove the debris and repair as detailed in subsequent sections of this manual.
4. **WARNING: FAILURE TO RELIEVE PRESSURE CAN RESULT IN THE CAP BLOWING OFF, CAUSING INJURY OR DEATH.** Make sure the auxiliary gate valve in the lateral between the main and the hydrant is closed and that the hydrant is not charged with pressure when removing caps.

Inspection

1. It is recommended that hydrants be inspected twice per year to ensure their satisfactory operation. After each use (especially in cold weather) hydrants should be specifically inspected for drainage.
2. Routine inspection should cover the points outlined in AWWA Manual M17 and include (but not be limited to) the following points:
   a. External inspection of paint, caps, chains, etc.
   b. Checking traffic type hydrants for damage to the breakaway feature.
   c. Using a listening device to check the main valve for leakage.
   d. Statically testing the hydrant to look for leakage at gaskets, caps, O-rings and drains.
   e. Verifying the hydrant drains properly.
   f. Cycling the hydrant from full open to full close.
   g. Check for routine lubrication needs which includes but may not be limited to loss of lubricant, nozzle caps and operating mechanism.
3. At time of inspection, flush the hydrant to remove any foreign material from the hydrant and the lateral. If necessary, flush the drains by filling the hydrant and then cycling open the main valve two times to force water out of the drains under pressure. If the hydrant is non-draining type, pump water out after flushing.

Maintenance View Video

AMERICAN Flow Control strongly recommends that you follow routine maintenance on fire hydrants as outlined in AWWA Manual M17 for Installation, Field Testing, and Maintenance of Fire Hydrants. The ease of operation and the frequency of repair depends on the condition of the water system and the maintenance given. Dirt, gravel and other foreign material in the hydrant may prevent it from closing or draining properly, which may result in damage to the hydrant main valve. Under most operating conditions, AMERICAN Flow Control recommends semi-annual lubrication and inspection of fire hydrants.

Note: Where grease is specified, use an AMERICAN Flow Control recommended food grade grease.

1. Twice per year, open the hydrant completely and flush for several minutes. Open and close valve to make sure it works properly, and check for leaks.
2. Remove a cap and verify that the hydrant is draining properly. After the main valve is closed, the water in the hydrant should drain rapidly. If it does not, the drain ports may be clogged. To clear drain ports, install nozzle cap, and tighten until water tight, then open hydrant two or three turns for several minutes. This will leave drain port partially open and permit water pressure to wash out the obstruction. If this method is unsuccessful, remove the operating rod assembly and clean the drain mechanism. If neither of above methods permits water to drain, it indicates that the drainage area around the hydrant base should be rebuilt.
3. If it is necessary to add lubricant, turn operating nut back from tight closed position until it turns freely, then remove pipe plug in top of operating nut and pump food grade grease into operating nut. DO NOT OVER PRESSURE LUBRICANT OR OVERFILL HYDRANT WITH LUBRICANT. FAILURE TO FOLLOW THESE INSTRUCTIONS WILL RESULT IN HARD OPERATION OF THE HYDRANT. SHOULD HARD OPERATION OCCUR REFER TO "TROUBLE SHOOTING GUIDE" DETAILED IN THIS MANUAL.
4. Remove all nozzle caps, clean rust or corrosion from threads of nozzles and caps, and replace cap gaskets if necessary. Apply a light coat of grease to nozzle threads before replacing cap.

5-1/4" AMERICAN-DARLING® B-84-B-5 TROUBLESHOOTING GUIDE

WARNING: Special care should be taken in the installation, inspection and repair of pressure containing devices such as valves and hydrants. FAILURE TO FOLLOW PROPER PRACTICE AND GUIDELINES CAN RESULT IN SERIOUS INJURY OR DEATH. High pressure and water hammer, due to rapid opening or closing of a hydrant or valve, can also cause major damage to the hydrant, valve, water main, fire hose, or other attached equipment.

Problem	Solution
1. Operating nut turns freely but hydrant does not open.	1. Inspect rod coupling for breakage and ensure rod pin is properly installed.
2. Hydrant will not shut off or ground around hydrant is highly saturated.	2. Close hydrant and remove nozzle cap. Check with listening device to determine if water is passing by main valve. If it is determined that the main valve is leaking, try the following: a. Flush hydrant in fully open position (watch to see if rocks or other foreign objects flush out of the barrel). b. After flushing for several minutes, shut off the hydrant. Watch for several minutes to see if flow stops. Place hand over open hose nozzle; suction should be felt, indicating hydrant is no longer leaking and drains are working properly. c. If flushing does not solve the problem, it would indicate that something is trapped or has cut the main valve rubber. Safely follow the seat removal instructions to replace the valve. Check threads on bronze seat to be sure that it is not damaged. If threads appear worn or bent, replace the bronze seat. d. If replacing the valve does not stop the leakage, bolting at the hydrant shoe may be loose or the base gasket is damaged. The hydrant must be excavated to make the repair.
3. External leakage is noticed around the operating nut.	3. This indicates that O-rings are cut or missing. Replace o-rings as referenced in the disassembly and repair instructions.

Problem	Solution
4. Operating nut is extremely hard to turn.	4. Try to turn the operating nut. If the nut turns, carefully turn the nut back from a tight closed position until it turns freely. Remove the pipe plug in the top of the operating nut. If necessary, add food grade grease to the operating nut. DO NOT OVERPRESSURE THE LUBRICANT OR OVERFILL THE HYDRANT WITH LUBRICANT. FAILURE TO FOLLOW THESE DIRECTIONS MAY RESULT IN HARD OPERATION OF THE HYDRANT. ALWAYS FULLY OPEN AND CLOSE THE HYDRANT AFTER LUBRICATING. Replace the pipe plug taking care to replace the thread sealant. The hydrant should cycle freely. If this does not solve the problem, remove the operating nut. Verify the hydrant has not been over lubricated and inspect the threads of the operating nut and upper rod. Inspect the thrust washer to ensure it is lubricated and is undamaged. Replace and/or lubricate the thrust washer if necessary. If this does not solve the problem, remove the hydrant seat and flush thoroughly, then reassemble. **Note: Where grease is specified, use an AMERICAN Flow Control recommended food grade grease.**
5. Water is dripping around nozzles.	5. Close hydrant and remove nozzle cap. Replace cap gasket. Check the nozzle to be sure it is properly installed.
6. Hydrant will not drain properly.	6. Check to be sure the water table has not risen too high to allow for drainage. Flush hydrant to be sure drains are clear. Open hydrant slowly several turns while leaving caps firmly in place to ensure hydrant drains are clear. Close hydrant and repeat this procedure. Do this slowly several times. If problem is not corrected, excavate the hydrant to see if concrete or other materials have blocked the drain outlets.

5-1/4" AMERICAN-DARLING® B-84-B-5 PARTS LIST

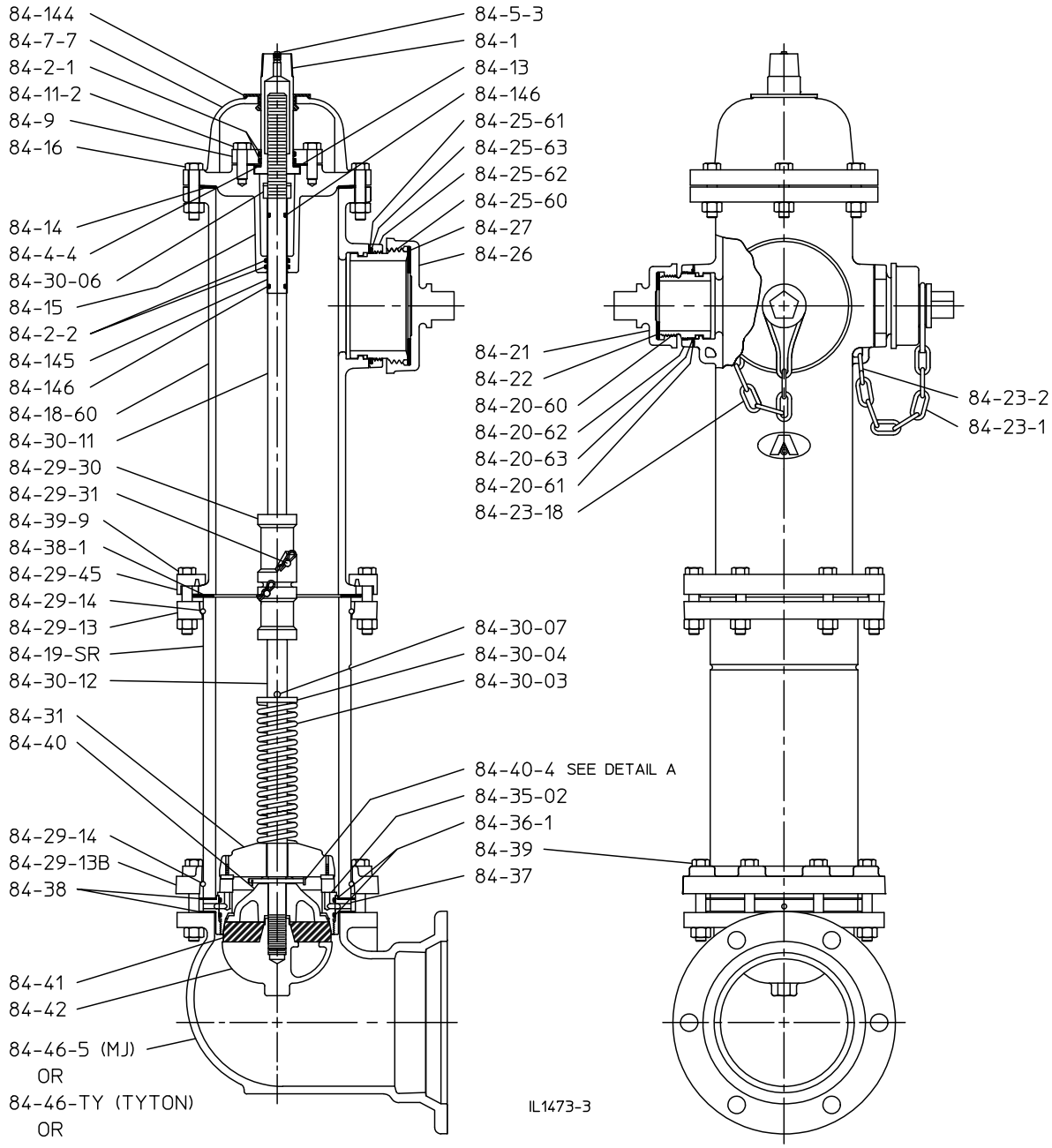

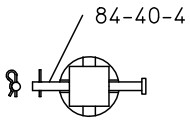

DETAIL A

TOP VIEW OF CLEVIS PIN & CLIP PIN USED TO SECURE HYDRANT VALVE ASSEMBLY

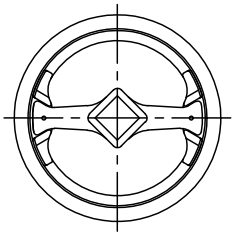

TOP VIEW OF SEAT AND DRAIN LEVER ASSEMBLY

5-1/4" AMERICAN-DARLING® B-84-B-5 PARTS LIST

Part No.	Qty.	Description	Material
84-1	1	Operating Nut	Bronze
84-2-1	2	Cover O-ring	Buna N
84-2-2	2	Housing O-ring	Buna N
84-4-4	1	Thrust Washer	Nylatron
84-5-3	1	Pipe Plug	Stainless Steel
84-7-7	1	Weather Cover	Gray Iron
84-9	1	Housing Cover	Gray Iron
84-11-2	4	Housing Cover Cap Screw	Plated Steel
84-13	1	Housing Cover Gasket	Fiber
84-14	1	Housing Gasket	Composition Rubber
84-15	1	Housing	Ductile Iron
84-16	6	Housing Bolt and Nut	Plated Steel
84-18-60	1	Upper Barrel	Ductile Iron
84-19-SR	1	Lower Barrel	Ductile Iron
84-20-60	2	Hose Nozzle	Bronze
84-20-61	2	Hose Nozzle O-ring Seal	Buna N
84-20-62	2	Hose Nozzle Retainer	Ductile Iron
84-20-63	2	Hose Nozzle Retainer Washer	Teflon
84-21	2	Hose Cap	See Note 8
84-22	2	Hose Cap Gasket	Rubber
84-23-1	1 Per Nozzle	Hose Cap Chain	Steel
84-23-2	1 Per Nozzle	S Hook	Steel
84-23-18	1 Per Nozzle	Pumper Cap Chain	Steel
84-25-60	1 or 0	Pumper Nozzle	Bronze
84-25-61	1 Per Nozzle	Pumper Nozzle O-ring Seal	Buna N
84-25-62	1 Per Nozzle	Pumper Nozzle Retainer	Ductile Iron
84-25-63	1 Per Nozzle	Pumper Nozzle Retainer Washer	Teflon
84-26	1 Per Nozzle	Pumper Cap	See Note 8
84-27	1 Per Nozzle	Pumper Cap Gasket	Rubber
84-29-13	1	Barrel Flange	Ductile Iron
84-29-13B	1	Base Flange	Ductile Iron
84-29-14	2	Snap Ring	Stainless Steel
84-29-30	1	Rod Coupling	Epoxy Coated Gray Iron
84-29-31	2	Rod Coupling Pin and Clip Pin	Stainless Steel
84-29-45	1	Breakable Flange	Gray Iron
84-30-03	1	Spring	Stainless Steel
84-30-04	1	Spring Plate	Stainless Steel
84-30-06	1	Travel Stop Nut	Bronze
84-30-07	1	Spring Plate Pin	Stainless Sreel
84-30-11	1	Upper Rod	Steel
84-30-12	1	Lower Rod	Steel
84-31	1	Drain Lever	Bronze
84-35-02	1	Hydrant Seat	Bronze
84-36-1	2	Hydrant Seat O-ring	Buna N

5-1/4" AMERICAN-DARLING® B-84-B-5 PARTS LIST

Part No.	Qty.	Description	Material
84-37	1	Drain Ring	Bronze
84-38	2	Drain Ring Gasket	Composition Rubber
84-38-1	1	Barrel Gasket	Composition Rubber
84-39	8	Base Bolt and Nut	Stainless Steel
84-39-9	8	Barrel Bolt and Nut	Plated Steel
84-40	1	Valve Top	Ductile Iron
84-40-4	1	Valve Top Clevis and Clip Pin	Stainless Steel
84-41	1	Hydrant Valve	EPDM Rubber
84-42	1	Valve Bottom	Ductile Iron
84-46-2	1	Flanged Base	Ductile Iron
84-46-2A	1	Vertical Entry Base	Ductile Iron
84-46-5	1	Mechanical Joint Base	Ductile Iron
84-46-PE	1	Mechanical Joint Plain End Base	Ductile Iron
84-46-TY	1	TYTON® Base	Ductile Iron
84-46-6AA	1	ALPHA™ Restraint Joint Base	Ductile Iron
84-46-6AX	1	ALPHA™ XL Restraint Joint Base	Ductile Iron
84-144	1	Weather Shield	Rubber
84-145	1	Rod Sleeve	Bronze
84-146	2	Sleeve O-ring	Buna N
84-36-1	2	Hydrant Seat O-ring	Buna N

ALPHA restraint joints will accommodate the following pipe types and sizes:

ALPHA

- Ductile iron per AWWA C151
- PVC per ASTM D1785 (Schedule 40 and 80)
- PVC per ASTM D2241 (SDR 21)
- PVC per AWWA C900
- HDPE per AWWA C906 (SDR 9, 11, 13.5, and 17)

ALPHA XL

- Gray iron (Class A, B, C, and D)

Nominal Size (in)	ALPHA OD Range (in)	ALPHA XL OD Range (in)
6	6.60 - 7.00	6.90 - 7.10

Notes

1. Size and shape of nut on operating nut and cap, threading on nozzles and caps, and the direction of opening made to specifications.
2. Cap chains are not furnished unless specified.
3. Working pressure 250 psig. Factory test pressure 500 psig.
4. Hydrant meets or exceeds the ANSI/AWWA C502 standard.
5. Upper barrel can be rotated 360° .
6. UL Listed and Approved by FM Approvals at 250 psig in allowable configurations.
7. Certified to NSF/ANSI Standard 61 and NSF/ANSI 372.
8. National Standard and other common cap configurations are constructed of ductile iron. Other offerings may be constructed of gray cast iron.
9. Nominal turns to open is 19 1/2.
10. TYTON® is a registered trademark of United States Pipe and Foundry Co., LLC.
11. ALPHA™ is a trademark of Romac Industries, Inc. (U.S. Patent 8,894,100)

Spare Parts

Spare parts shall include the following:

O-ring for housing, O-ring for housing cover, O-ring for nozzles, barrel flange gasket, base flange gasket, main valve seat gasket or O-ring, hydrant valve and cap gaskets.

For traffic model hydrants, also include traffic repair kits.

5-1/4" AMERICAN-DARLING® B-84-B-5 REPAIR INSTRUCTIONS

Disassembling the Hydrant

View Video

WARNING: Special care should be taken in the installation, inspection and repair of pressure containing devices such as valves and hydrants. FAILURE TO FOLLOW PROPER PRACTICE AND GUIDELINES CAN RESULT IN SERIOUS INJURY OR DEATH. High pressure and water hammer, due to rapid opening or closing of a hydrant or valve, can also cause major damage to the hydrant, valve, water main, fire hose, or other attached equipment.

Removing Internal Parts

One person with hand tools and a lightweight seat wrench can quickly remove all the working parts, including hydrant valve, drain lever and hydrant seat. To repair, it is not necessary to excavate American-Darling hydrants; merely remove the internal parts.

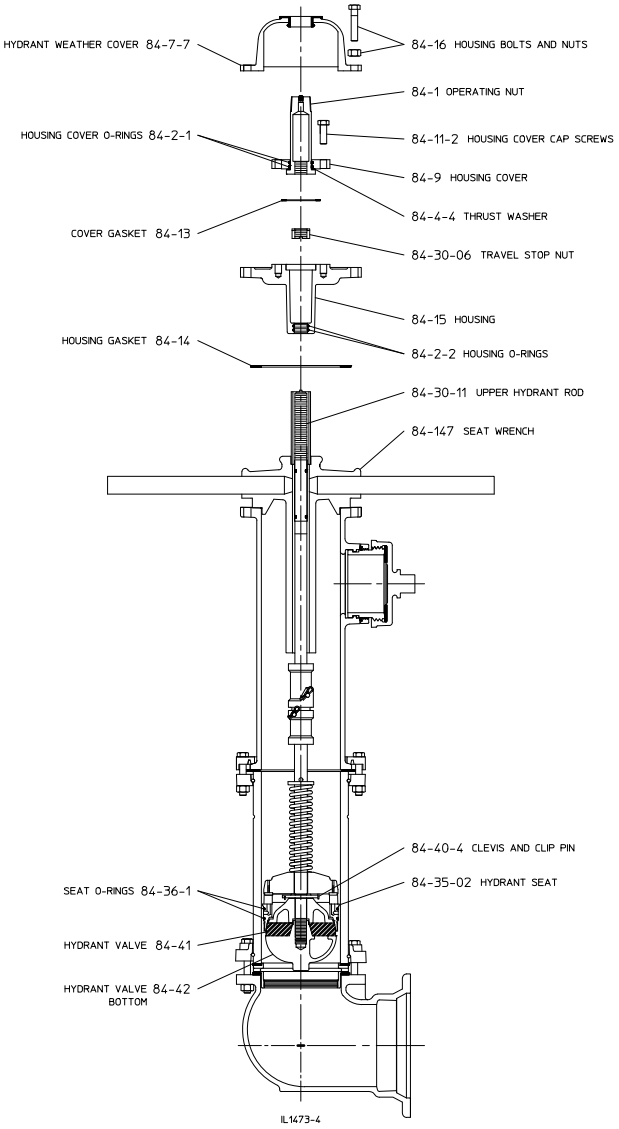

Directions for Removing Internal Parts of 5-1/4" American-Darling B-84-B-5 Hydrants

1. **Shut off water line leading to hydrant making sure the hydrant is not under pressure. FAILURE TO FOLLOW PROPER PRACTICE AND GUIDELINES CAN RESULT IN SERIOUS INJURY OR DEATH.**
2. Partially open hydrant valve to relieve trapped pressure.
3. Standing to the side of the hydrant and away from the direction of the hydrant cap(s), loosen one of the hose caps to relieve any pressure that may be present in the hydrant barrel. Close hydrant valve. From full open to full close takes approximately 17 1/2 turns.
4. Remove hydrant weather cover (84-7-7) with weather shield by removing two bolts and nuts (84-16).
5. Remove the four housing cover cap screws (84-11-2) on housing cover (84-9).
6. Unscrew and remove operating nut (84-1) from upper hydrant rod (84-30-11) together with housing cover (84-9) and thrust washer (84-4-4).
7. Use top of seat wrench to unscrew and remove travel stop nut (84-30-06).
8. Remove remaining housing bolts (84-16) then lift out housing (84-15). Inspect O-rings and replace if necessary. Special care must be taken to avoid damaging O-rings (84-2-2).
9. Place seat wrench over upper hydrant rod (84-30-11) and turn to the left (counterclockwise) to unscrew bronze hydrant seat (84-35-02) and lift out hydrant rod with completely assembled internal working parts attached, including hydrant seat, hydrant valve, drain lever and seat O-rings.

   NOTE: When a supply of gaskets and O-rings are available, always install new ones when reassembling the hydrant. Clean dirt from O- ring grooves.

Reassembling the Hydrant

View Video

WARNING: Special care should be taken in the installation, inspection and repair of pressure containing devices such as valves and hydrants. FAILURE TO FOLLOW PROPER PRACTICE AND GUIDELINES CAN RESULT IN SERIOUS INJURY OR DEATH. High pressure and water hammer, due to rapid opening or closing of a hydrant or valve, can also cause major damage to the hydrant, valve, water main, fire hose, or other attached equipment.

1. On B-84-B hydrants manufactured prior to 1997 when the hydrant valve is replaced, use a locking compound to secure the valve ball assembly. On B-84-B hydrants manufactured after 1997, pin the valve ball assembly in place with the clevis and clip pin (84-40-4). Tighten lower valve bottom (84-42) to 145 ft-lbs. of torque. Advance slot in the valve top (84-40) to next pin location.
2. Thread the valve assembly (parts 84-40, 84-41, 84-42) to the lower hydrant rod. Grease the seat O-rings (84-36-1) and lower the parts through the hydrant barrel.
3. When the assembly has made contact with the drain ring (84-37), push the assembly straight down. To avoid cross threading, turn the seat wrench counterclockwise until an ajar is felt. This ajar indicates that the thread starts are properly aligned.
4. Turn the seat wrench clockwise approximately seven turns until it is tight. Pull upward on the rod to ensure it is securely fastened to the drain ring (84-37). Replace the housing gasket (84-14).
5. Grease the threads on the upper hydrant rod (84-30-11) and the O-rings (84-2-2) in the housing.
6. Slip the housing (84-15) over the rod. Note: Special care should be taken to avoid damaging housing O-rings. Thread the travel stop nut (84-30-06) onto the upper rod until contact is made with the brass rod sleeve. Care should be taken to not over tighten the travel stop nut or damage can occur to the sleeve.
7. Put the cover gasket (84-13) in place and then thread the bronze operating nut (84-1) onto the rod.
8. Bolt up the housing (84-15)using approximately 60 ft-lbs of torque.
9. Tighten the operating nut with the operating wrench and put the cover cap screws (84-11-2) in place. Then replace the weather cover (84-7-7) and bolt it up properly using approximately 60 ft-lbs of torque.
10. Carefully pressurize the hydrant and check for visual leaks.

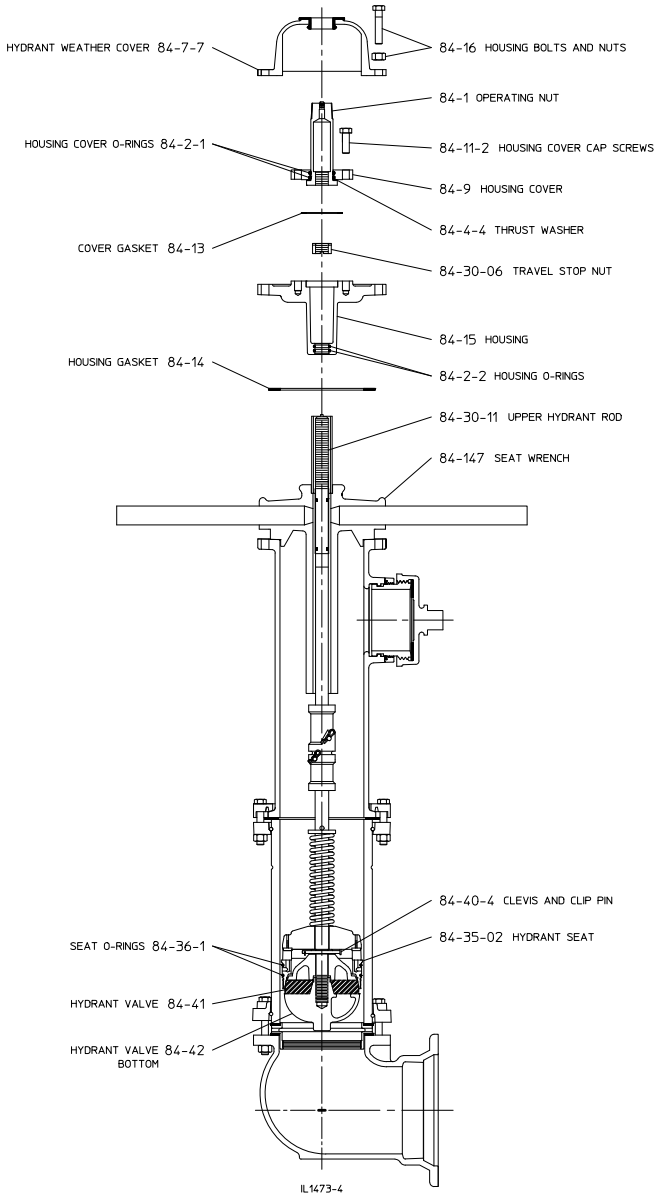

Note: Where grease is specified, use an AMERICAN Flow Control recommended food grade grease.

5-1/4" AMERICAN-DARLING® B-84-B-5 TRAFFIC DAMAGE REPAIR

View Video

WARNING: Special care should be taken in the installation, inspection and repair of pressure containing devices such as valves and hydrants. FAILURE TO FOLLOW PROPER PRACTICE AND GUIDELINES CAN RESULT IN SERIOUS INJURY OR DEATH. High pressure and water hammer, due to rapid opening or closing of a hydrant or valve, can also cause major damage to the hydrant, valve, water main, fire hose, or other attached equipment.

Should a hydrant be struck by a vehicle such that the upper barrel is seperated/broken from the lower barrel, the following procedure should be followed to reassemble the hydrant and make it operational. (A traffic damage repair kit for the specific **5-1/4" American-Darling B84-B** hydrant is required to perform this procedure.)

1. Although it is possible to repair break features of the hydrant under pressure, the extent of a traffic impact may be unknown. It is considered safe practice to close the auxilliary valve ahead of the hydrant, or use another means to cut off flow and pressure to the hydrant.
2. Inspect the upper barrel (84-18-60) to determine if any of the components are fractured. Traffic impact usually results in a fractured traffic flange (84-29-45), broken or bent flange bolts (84-39-9), a fractured rod coupling (84-29-30) and damage to the gasket between the upper and lower barrels (84-38-1). Should cracking or fracture of any component occur, it should be replaced.
3. The operating nut (84-1) should be rotated to verify that it turns smoothly and easily and that the hydrant rod is centered in the barrel. (Should there be any binding or difficulty in turning the operating nut, the upper barrel should be disassembled and inspected for damaged parts.)
4. Remove the broken coupling (84-29-30) and verify that the upper hydrant rod (84-30-11) is not bent or damaged.
5. Inspect the lower barrel (84-19-SR) and clean any dirt or debris from the gasket seating surface.
6. Inspect the lower barrel flange (84-29-13) to determine that it will receive the new bolts contained in the traffic damage repair kit.
7. Turn the operating nut to place the hydrant in the full open position; this will extend the upper hydrant rod and ease the replacement of the rod coupling (84-29-30). Remove the broken rod coupling segment from the lower hydrant rod and verify that the rod end will receive the new coupling.
8. Orient the new rod coupling such that the end with the word "TOP" is placed on the upper hydrant rod such that the hole in the coupling aligns with the half hole on the hydrant rod. Lock coupling in place with stainless steel coupling pin (84-29-31) and clip pin.
9. Lift the upper barrel assembly and position it over the lower barrel while aligning the hydrant rod coupling on the upper hydrant rod with the lower hydrant rod such that the hole in the coupling aligns with the half hole on the lower hydrant rod. Slide the coupling over the lower valve rod and insert coupling pin and clip pin. Lift upper barrel assembly to insure upper and lower rods are connected to coupling.
10. Turn operating nut in the closing direction which will lower the upper barrel onto the lower barrel. Rotate the hydrant to position the hose and pumper nozzles in the desired orientation to the curb. Be careful to position the barrel gasket (84-38-1) to achieve full coverage of the end faces of the upper and lower barrels. Install new traffic flanges (84-29-45). (Note: While lowering the upper section onto the lower section, a pinch point exists. Keep fingers clear.)
11. After nuts have been started on all bolts, tighten the flange bolts in an alternating pattern to a torque value of between 55 and 60 ft-lbs.
12. Once the hydrant has been reassembled, it is essential that it be operated to determine that it is fully functional via the following procedure.
13. Open the auxiliary or secondary gate valve in the lateral to allow water pressure to the hydrant.
14. The hose and pumper caps should be tightened and the operating nut turned in the open direction. After cracking the valve seat open, the operating nut should rotate freely without binding.

Traffic Damage Repair Kit Parts		
84-29-31	2	Rod Coupling and Clip Pin
84-29-30	1	Breakable Rod Coupling
84-29-45	2	Traffic Flange
84-38-1	1	Barrel Gasket
84-39-9	8	Barrel Bolts and Nuts

5-1/4" AMERICAN-DARLING® B-84-B AMLOK NOZZLE REPLACEMENT (FOR HYDRANTS BUILT PRIOR TO 2006)

View Video

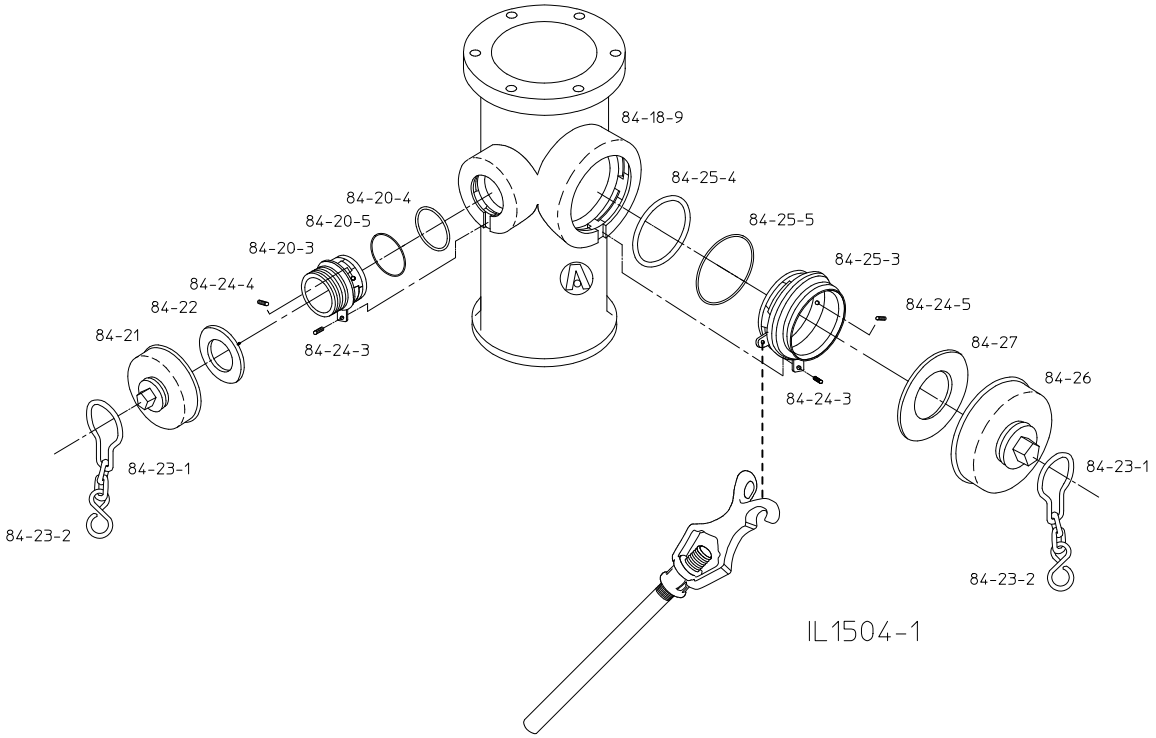

Amlok Nozzle Replacement

WARNING: POTENTIAL HYDRANT CAP HAZARD. FAILURE TO RELIEVE PRESSURE CAN RESULT IN THE CAP BLOWING OFF, CAUSING SERIOUS INJURY OR DEATH. Make sure the auxiliary gate valve in the lateral between the main and the hydrant is closed and that the hydrant is not charged with pressure when removing caps.

Step 1

Remove the nozzle cap. Remove the 5/16 in. internal set screw (84-24-4 or 84-24-5) with a 5/32 in. hex head allen wrench. Unscrew the 5/16 in external slotted screw (84-24-3) out of the lug on the nozzle.

Step 2

Use a universal spanner wrench or AMERICAN Flow Control nozzle wrench to rotate nozzle 1/8 turn clockwise. The nozzle can now be pulled from the hydrant barrel.

Step 3

Remove O-ring gasket from the nozzle boss. Insert new O-ring and lubricate with food grade grease. Place the nozzle spacer O-ring (84-20-5) or (84-25-5) on the nozzle directly behind the nozzle collar. Place a small amount of lubricant on the plain end of the new nozzle.

Note: Where grease is specified, use an AMERICAN Flow Control recommended food grade grease.

Step 4

Insert the new nozzle into the hydrant barrel with the tapped lug at the 7:30 position. Push the nozzle home and rotate counterclockwise until the nozzle stops.

Step 5

Insert the 5/16 in. slotted nozzle set screw (84-24-3) into the tapped lug on the nozzle. Tighten the set screw into the slot on the hydrant barrel to remove any play in the nozzle. The top of the set screw should be flush with the surface of the nozzle lug.

Step 6

Start internal set screw (84-24-4) or (84-24-5) into the threaded hole inside the nozzle. Apply Loctite Thread Sealant #545 or equivalent to the external threads of the set screw. Continue to turn the set screw into the threaded hole with a 5/32 in. hex head allen wrench until it stops. DO NOT TIGHTEN. Replace the nozzle cap and hydrostatically test the hydrant.

5-1/4" AMERICAN-DARLING® B-84-B-5 NOZZLE REPLACEMENT MECHANICALLY ATTACHED PUMPER NOZZLE (FOR HYDRANTS BUILT BEGINNING IN 2006)

View Video

WARNING: POTENTIAL HYDRANT CAP HAZARD. FAILURE TO RELIEVE PRESSURE CAN RESULT IN THE CAP BLOWING OFF, CAUSING SERIOUS INJURY OR DEATH. Make sure the auxiliary gate valve in the lateral between the main and the hydrant is closed and that the hydrant is not charged with pressure when removing caps.

Removal

1. Remove cap.
2. Place wrench on the retainer so it engages the rounded protrusions and unthread from nozzle.

   Note: Removal of the 4 in. and 5 in. Storz hydrant nozzle requires the use of the hinged pumper nozzle retainer wrench (AMERICAN Flow Control Part No. 82766).
3. Rotate nozzle counterclockwise until the four lugs on the nozzle disengage the recesses in the nozzle section socket which will allow the nozzle to be removed.

Installation

1. Thread retainer onto the retainer threads of the pumper nozzle.
2. Place washer over nozzle starting from the end with the four lugs and into the chamfer recess in the retainer.
3. Grease O-ring and place it over nozzle starting from the end with the four lugs and against the washer.
4. Insert the nozzle/retainer/washer/O-ring subassembly into the socket in the nozzle section. Rotate the subassembly clockwise until it stops with the four lugs on the nozzle fully engaged in the anti-rotation recesses in the socket. If it cannot be rotated, turn the retainer in a direction to allow the nozzle to be inserted further into the socket so the subassembly rotates clockwise against the stops.
5. Hand tighten the retainer to press O-ring against the face of the socket.
6. Place wrench on the retainer so it engages the rounded protrusions, tighten firmly.
7. Note: Installation of the 5-inch Storz hydrant nozzle requires the use of the hinged pumper nozzle retainer wrench (AMERICAN Flow Control Part No. 82766).
8. Clean rust or corrosion from cap threads and replace cap gasket if necessary. Apply a light coat of grease to the nozzle threads and install the cap.

   Cap all nozzles and open the hydrant valve, check the area around the repaired nozzle for leaks.

   NOTE: Where grease is specified, use an AMERICAN Flow Control recommended food grade grease.

Mechanically Attached Pumper Nozzle

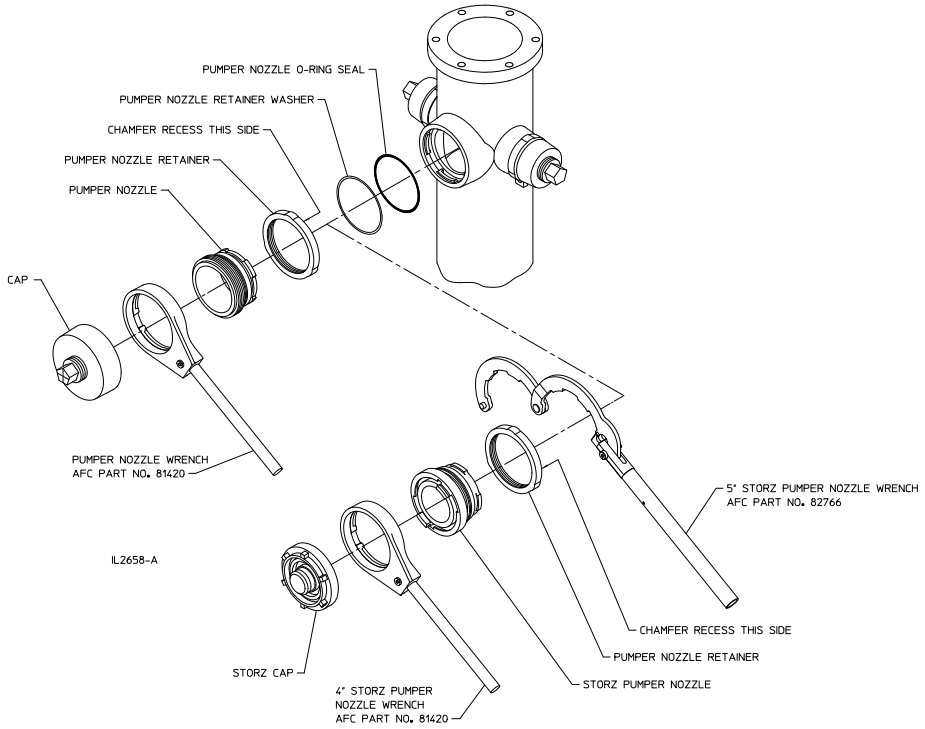

5-1/4" AMERICAN-DARLING® B-84-B-5 NOZZLE REPLACEMENT MECHANICALLY ATTACHED 2-1/2" HOSE NOZZLE (FOR HYDRANTS BUILT BEGINNING IN 2006)

View Video

WARNING: POTENTIAL HYDRANT CAP HAZARD. FAILURE TO RELIEVE PRESSURE CAN RESULT IN THE CAP BLOWING OFF, CAUSING SERIOUS INJURY OR DEATH. Make sure the auxiliary gate valve in the lateral between the main and the hydrant is closed and that the hydrant is not charged with pressure when removing caps.

Removal

1. Remove cap.
2. Place wrench on the retainer so it engages the rounded protrusions and unthread from nozzle.
3. Rotate nozzle counterclockwise until the two lugs on the nozzle disengage the recesses in the nozzle section socket, which will allow the nozzle to be removed.

Installation

1. Thread retainer onto the retainer threads of the hose nozzle. NOTE: In cases where hose nozzle threads having a larger diameter than the retainer, the retainer will need to be assembled from the lug side only.
2. Place washer over nozzle starting from the end with the two lugs and into the chamfer recess in the retainer.
3. Grease O-ring and place it over nozzle starting from the end with the two lugs and against the washer.
4. Insert the nozzle /retainer/washer/O-ring subassembly into the socket in the nozzle section. Rotate the subassembly clockwise until it stops with the lugs on the nozzle fully engaged in the anti-rotation recesses in the socket. If it cannot be rotated, turn the retainer in a direction to allow the nozzle to be inserted further into the socket so the subassembly rotates clockwise against the stops.
5. Hand tighten the retainer to press O-ring against the face of the socket.
6. Place Hose Nozzle Wrench on Retainer so it engages the rounded protrusions, and tighten firmly. Apply no more than 190 ft-lbs. of torque.
7. Clean rust or corrosion from cap threads and replace cap gasket if necessary. Apply a light coat of grease to the nozzle threads and install the cap.

   NOTE: Where grease is specified, use an AMERICAN Flow Control recommended food grade grease.

Mechanically Attached Hose Nozzle

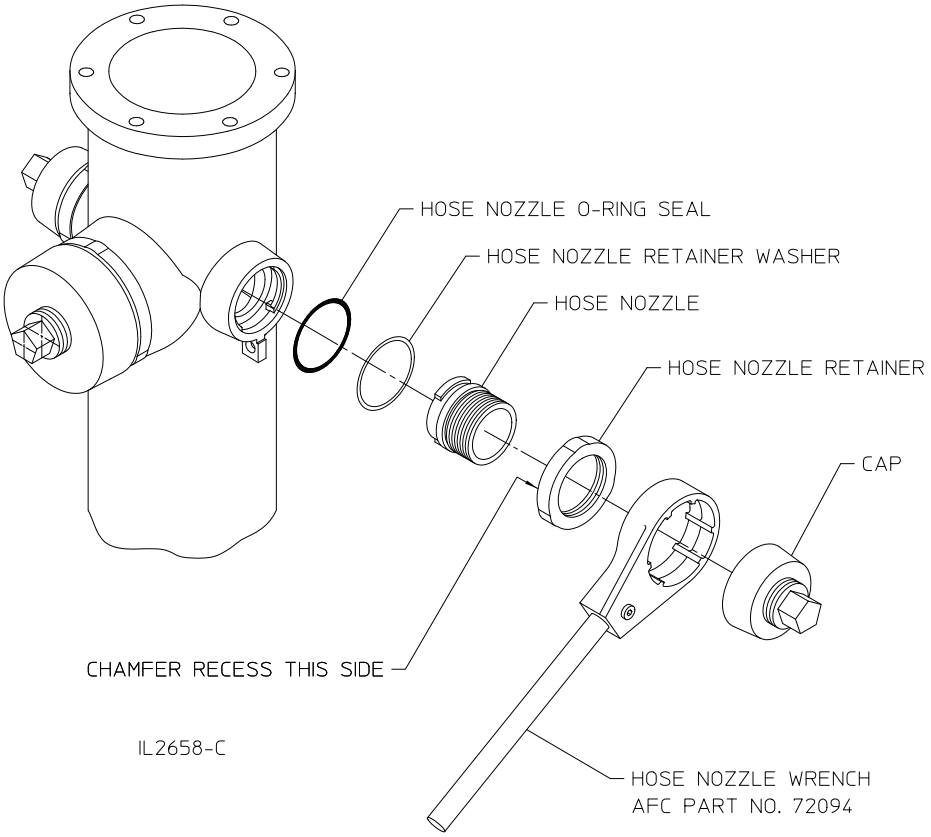

5-1/4" AMERICAN-DARLING® B-84-B-5 EXTENSION INSTRUCTIONS

View Video

The **5-1/4" American-Darling B-84-B-5** hydrant is extended at the barrel flange above the ground line, eliminating the need for excavation.

Parts Required for Hydrant Extension

84-19X-SR	1	Extension Barrel*
84-29-13	2	Unbreakable Flanges
84-29-14	2	Snap Rings
84-29-31	2	Rod Coupling Pins
84-29-40	1	Unbreakable Rod Coupling
84-30-15	1	Extension Rod
84-38-1	2	Barrel Gaskets
84-39-9	8	Barrel Bolts and Nuts

*Extension barrels and rods are available in increments of 6", starting at 6" long.

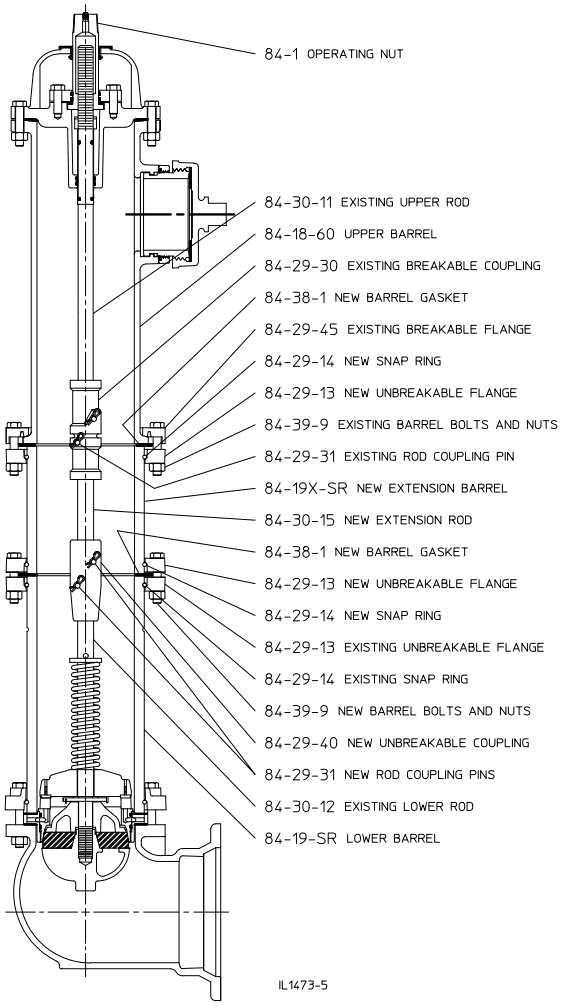

NOTE: The use of extension lengths made by more than one extension kit is not recommended. When combined extension kit and existing trench depth exceeds 9 feet, replace existing lower rod with appropriate length lower rod instead of using rod extension. When combined length exceeds 12 ft, rod guides are recommended for lower rod.

Procedure

1. Close hydrant valve. It is considered safe practice to close the auxiliary valve ahead of the hydrant, or use another means to cut off flow and pressure to the hydrant. Always standing to the side of the hydrant and away from the direction of the hydrant caps, loosen one of the hose caps to relieve any pressure that may be present in the hydrant barrel. **WARNING: FAILURE TO RELIEVE PRESSURE CAN RESULT IN THE CAP BLOWING OFF, CAUSING SERIOUS INJURY OR DEATH.**
2. Remove existing barrel bolts and nuts (84-39-9).
3. Remove existing traffic barrel flange halves (84-29-45).
4. Raise upper barrel (84-18-60) from lower barrel (84-19-SR) by turning operating nut (84-1) in the opening direction and lifting the upper barrel at the same time to prevent the hydrant valve from opening.
5. Raise the upper barrel until there is sufficient separation from the lower barrel to permit removing of the lower rod coupling pin (84-29-31) and clip pin. **Block upper barrel in this position to ensure protection while removing the coupling pins.**
6. Safely remove lower rod coupling pin and clip pin. Lift and remove upper barrel assembly. **Use proper lifting techniques to avoid injury.**
7. Assemble new unbreakable rod coupling (84-29-40) to one end of the new extension rod (84-30-15) in position as shown. Insert a new coupling pin (84-29-31) and clip pin. Assemble other end of new unbreakable rod coupling to existing lower rod (84-30-12) using a new coupling pin (84-29-31) and clip pin.
8. Remove old gasket and place new barrel gasket (84-38-1) on lower barrel.
9. Place assembly on lower barrel making sure gasket and hydrant barrel inside diameters are aligned.
10. Assemble new barrel bolts and nuts (84-39-9). Torque in an alternating pattern to 80 ft.-lbs.
11. Place new barrel gasket (84-38-1) on extension barrel. Lift upper assembly and attach existing breakable rod coupling (84-29-30) to new extension rod (84-30-15). **Use proper lifting techniques to avoid injury.**
12. **Block the upper barrel assembly as in Step 5** and insert a new coupling pin (84-29-31) and clip pin in the existing breakable rod coupling (84-29-30).
13. Lower upper barrel assembly to the extension barrel by turning operating nut in the closing direction, making sure gasket remains centered. Lift barrel flange and assemble breakable flange halves by using existing barrel bolts and nuts (84-39-9). Torque in an alternating pattern to 55-60 ft.-lbs. Important: **Make sure gap between barrel flange (84-29-45) and new barrel flange (84-29-13) is equal around circumference of flanges.**
14. Safely shell test hydrant for joint tightness.

5-1/4" AMERICAN-DARLING® B-84-B-5 SPECIFICATIONS

Fire hydrants shall meet or exceed ANSI/AWWA C502, latest revision. Rated working pressure shall be 250 psig, test pressure shall be 500 psig and hydrants shall include the following specific design criteria:

- The main valve closure shall be of the compression type.
- Traffic feature must be designed for easy 360 rotation of nozzle section during field installation.
- The main valve opening shall not be less than 5-1/4 in. and be designed so that removal of all working parts can be accomplished without excavating.
- The hydrant valve shall be constructed of EPDM rubber and have a vertical taper of 20° or less.
- The bronze seat shall be threaded into an all bronze drain ring.
- The draining system of the hydrant shall be bronze and positively activated by the main operating rod. Hydrant drains shall close completely after no more than three turns of the operating nut. There shall be a minimum of two internal ports and four outlets to the exterior of the hydrant. Drain shutoff to be direct compression closure. Sliding drains are not permitted.
- Hydrant barrels shall be made of ductile iron. Nozzles shall be retained by collars. Threaded-in nozzles and nozzles using set screws, are not allowed.
- Hydrant upper barrel shall be factory coated with Electrodeposition (E-coat) epoxy primer and catalyzed two part polyurethane top coating. Base shall be coated with fusion bonded epoxy. All bolting below grade shall be 304 stainless steel.
- Friction loss not to exceed 3.0 psig at 1000 gpm through 4-1/2 in. pumper nozzle.
- Hydrants shall be equal to the **5-1/4 in. American-Darling B-84-B-5** by AMERICAN Flow Control fire hydrant.

INDEX

5-1/4" AMERICAN - DARLING® B-62-B-5 FIRE HYDRANT

Page

INTRODUCTION AND HISTORY 1C-2

ORDERING

Dimensions:

Overall Hydrant 1C-3

Optional Bases 1C-4

Operating Nut Sizes 1C-5, 1C-6

Weights 1C-7

Friction Loss 1C-8

Submittal Sheet 1C-9

INSTALLATION AND TESTING

Installation 1C-10

Testing 1C-11, 1C-12

OPERATION AND MAINTENANCE

Operation and Maintenance 1C-12, 1C-13

Troubleshooting Guide 1C-14, 1C-15

REPAIRS

Parts List 1C-16, 1C-17, 1C-18

Spare Parts 1C-18

Repair Instructions 1C-19, 1C-20

Traffic Damage Repair 1C-21

Nozzle Replacement 1C-22

Mechanically Attached Nozzles 1C-23, 1C-24

EXTENDING

Extension Instructions 1C-25

SPECFICATIONS 1C-26

5-1/4" AMERICAN-DARLING® B-62-B-5 FIRE HYDRANT

View Video

The 5-1/4" American-Darling B-62-B-5 hydrant incorporates over 100 years of experience in design, manufacture and field experience. This means dependable and efficient operation when needed.

Introduced in 1962, the **5-1/4" American-Darling B-62-B-5** hydrant is rated at 200 psig and is seat tested at 400 psig. The hydrant meets or exceeds all requirements of ANSI/AWWA C502 for dry barrel hydrants.

The **5-1/4" American-Darling B-62-B-5** hydrant has all the features you expect from a high quality fire hydrant. The epoxy primer and polyurethane top coat system on external surfaces of the upper barrel provide a durable, high-gloss finish that will continue to look good for years without repainting. The all bronze seat and bronze drain ring assure that the **5-1/4" American-Darling B-62-B-5** hydrant is easily repaired.

Optional UL-FM in Allowable Configurations

The **5-1/4" American-Darling B-62-B-5** hydrant is UL Listed by UL as meeting their standard UL 246, latest edition. FM Approvals has Approved the **5-1/4" American-Darling B-62-B-5**. Both UL and FM Approvals require that we consistently manufacture and test our hydrants in compliance with their stringent requirements. Our facilities are subject to periodic inspections to assure we are in compliance with their standards.

5-1/4” AMERICAN-DARLING® B-62-B-5 DIMENSIONS

Depth of Trench	Length of Lower Rod
2’ -0”	19.88”
2’ -6”	25.88”
3’ -0”	31.88”
3” -6”	37.88”
4’ -0”	43.88”
4’ -6”	49.88”
5’ -0”	55.88”
5’ -6”	61.88”
6’ -0”	67.88”
6’ -6”	73.88”
7’ -0”	79.88”
7’ -6”	85.88”
8’ -0”	91.88”
8’ -6”	97.88”
9’ -0”	103.88”
9’ -6”	109.88”
10’ - 0”	115.88”
10’ -6”	121.88”
11’ -0”	127.88”
11’ -6”	133.88”
12’ -0”	139.88”
12’ -6”	145.88”
13’ -0”	151.88”
13’ -6”	157.88”
14’ -0”	163.88”
14’ -6”	169.88”
15’ -0”	175.88”
15’ -6”	181.88”
16’ -0”	187.88”
16’ -6”	193.88”
17’ -0”	199.88”
17’ -6”	205.88”
18’ -0”	211.88”
18’ -6”	217.88”
19’ -0”	223.88”
19’ -6”	229.88”
20’ -0”	235.88

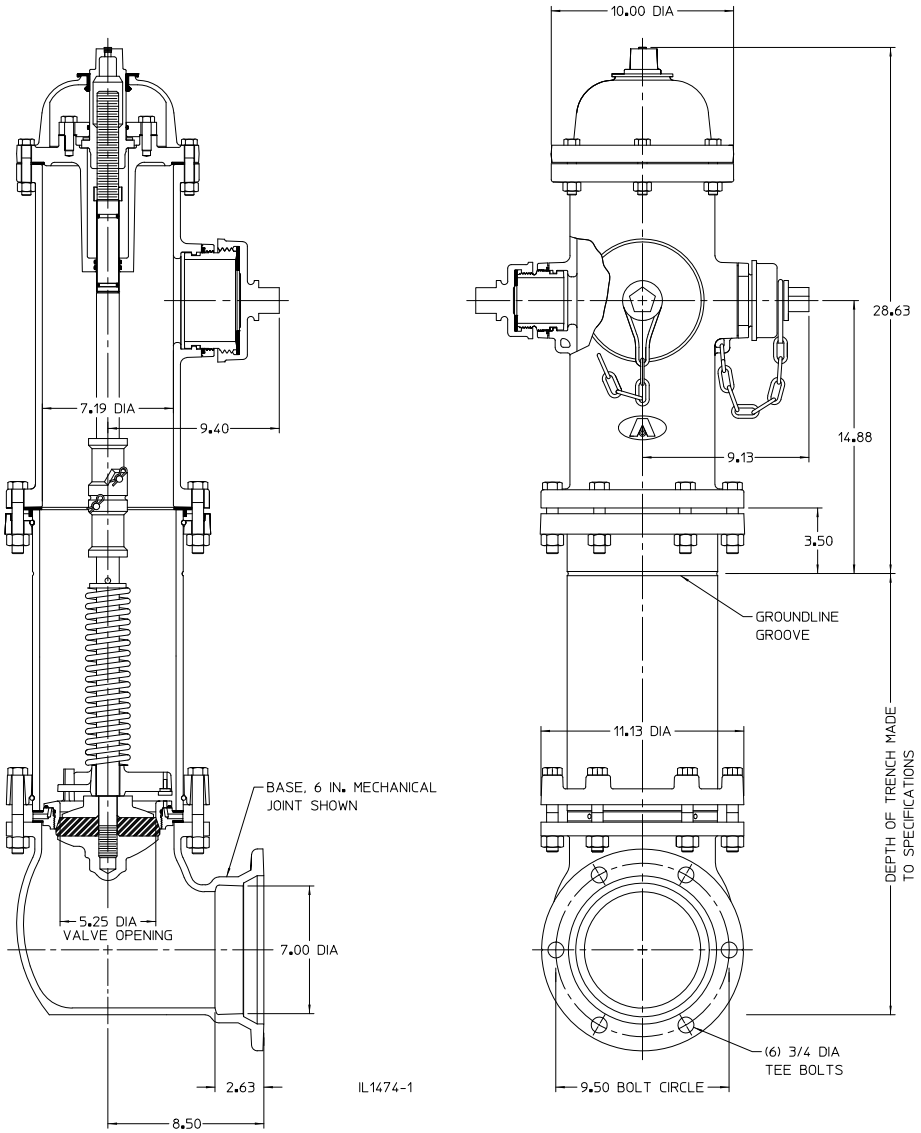

NOTES:

1. Depth of trench is the nominal distance from ground line to bottom of connecting pipe.
2. Size and shape of nut on operating nut and cap, threading on nozzles and caps, and the direction of opening made to specifications.
3. Cap chains are not furnished unless specified.
4. Working pressure 200 psig test pressure 400 psig.
5. Hydrant meets or exceeds the ANSI/AWWA C502 standard.
6. Upper barrel can be rotated 360° .
7. UL Listed and Approved by FM Approvals at 200 psig in allowable configurations.
8. Certified to NSF/ANSI Standard 61 and NSF/ANSI 372.

5-1/4" AMERICAN-DARLING® B-62-B-5 DIMENSIONS, OPTIONAL BASES

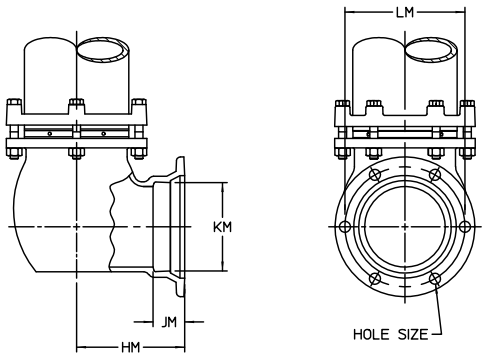

SIZE	HM	JM	KM	LM	HOLES	
					NO.	SIZE
4	9.00	2.50	4.91	7.50	4	.88
6	8.50	2.50	7.03	9.50	6	.88
8	9.75	2.50	9.18	11.75	6	.88

MECHANICAL JOINT BASE

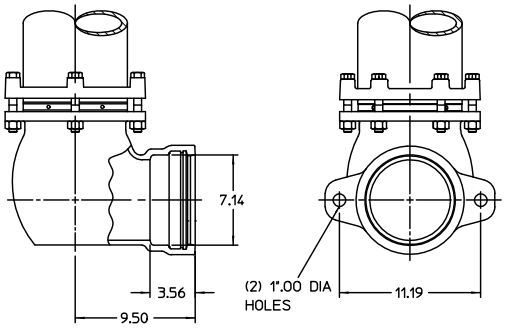

6" TYTON® BASE WITH LUGS

TYTON® is a registered trademark of United States Pipe and Foundry Co., LLC.

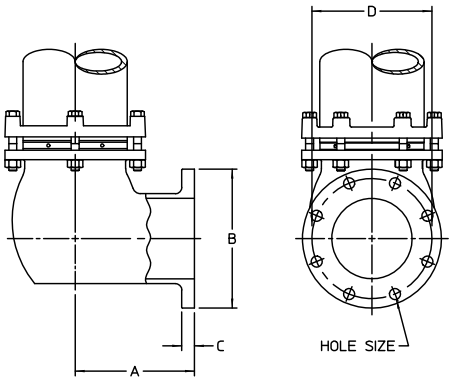

SIZE	A	B	C	D	HOLES	
					NO.	SIZE
6	9.44	11.00	1.00	9.50	8	.88
8	10.13	13.50	1.13	11.75	8	.88

FLANGED BASE

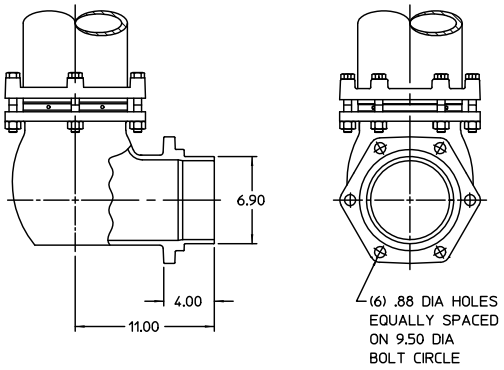

6" PLAIN END W/INTEGRAL
MJ GLAND BASE

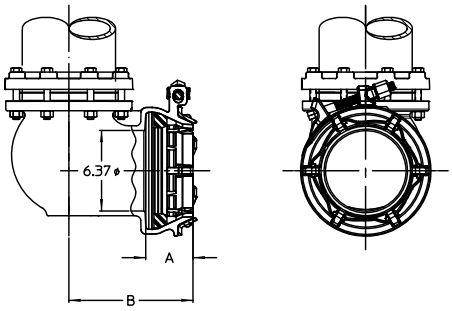

JOINT	A	B
ALPHA™	3.75	9.83
ALPHA™ XL	4.042	10.13

6" ALPHA™ AND ALPHA™ XL BASE

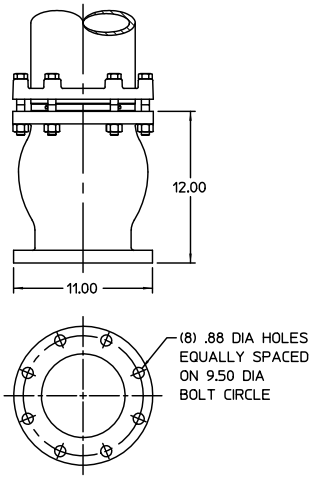

6" FLANGED VERTICAL ENTRY BASE

IL1474-2A

ALPHA™ is a trademark of Romac Industries, Inc. (U.S. Patent 8,894,100)

5-1/4" AMERICAN-DARLING® B-62-B-5 OPERATING NUT SIZES

Square "A" **Pentagon "B"** **Hexagon "C"** **Triangle "D"**

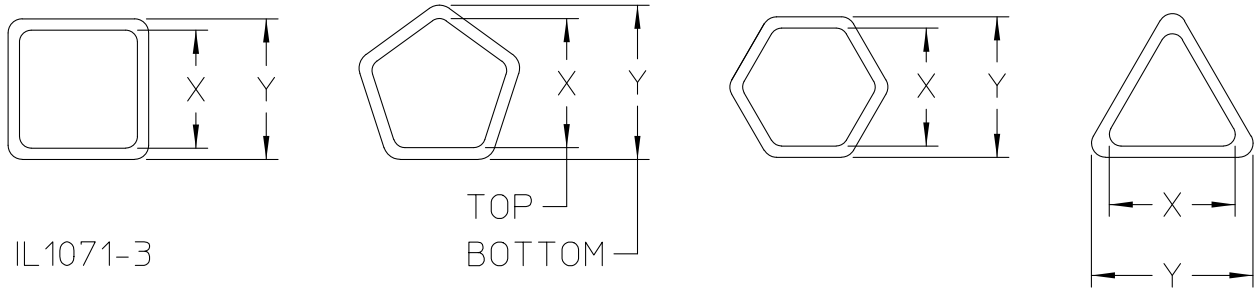

NOTES:
1. Operating nut furnished L.H. opening (counterclockwise) or R.H. (clockwise)
2. Cap nuts 1.125 high.

Nut Shape	American-Darling Nut No.	X	Y
Square "A"	A-1	.750	.812
	A-2	.750	.875
	A-3	.812	.875
	A-8	.875	.938
	A-9	.875	1.000
	A-12	.938	1.000
	A-13	.938	1.062
	A-16	1.000	1.062
	A-17	1.062	1.125
	A-19	1.125	1.188
	A-23	1.188	1.188
	A-24	1.188	1.250
	A-38	.750	.750
	A-41	1.125	1.125
Pentagon "B"	B-2	1.000	1.000
	B-3	1.000	1.062
	B-5	1.062	1.125
	B-11	1.125	1.188
	B-12	1.125	1.312
	B-13	1.125	1.375
	B-18	1.188	1.250
	B-23	1.250	1.250
	B-24	1.250	1.312
	B-26	1.250	1.375
	B-27	1.250	1.500
	B-31	1.312	1.375

5-1/4" AMERICAN-DARLING® B-62-B-5 OPERATING NUT SIZES

Nut Shape	American-Darling Nut No.	X	Y
Pentagon "B"	B-34	1.375	1.438
	B-35	1.375	1.500
	B-36	1.375	1.750
	B-41	1.438	1.500
	B-49	1.500	1.562
	B-50	1.500	1.625
	B-54	1.562	1.625
	B-69	1.125	1.250
	B-74	1.375	1.375
	B-75	.812	.875
	B-76	1.812	1.875
Hexagon "C"	C-1	1.062	1.125
	C-2	1.125	1.188
	C-5	1.188	1.188
	C-6	1.188	1.250
	C-8	1.312	1.375
	C-10	1.375	1.438
	C-15	1.438	1.500
	C-18	1.500	1.500
	C-22	1.250	1.312
	C-23	1.000	1.000
Triangle "D"	D-1	1.375	1.375
	D-2	1.375	1.375
	D-3	1.750	1.812

5-1/4” AMERICAN-DARLING® B-62-B-5 WEIGHTS WITH 6” MECHANICAL JOINT BASE AND ACCESSORIES (GLAND, GASKET AND HARDWARE)

TWO HOSE AND ONE PUMPER NOZZLE	
TRENCH DEPTH	WEIGHT (LBS)
3’-0”	380
3’-6”	400
4’-0”	420
4’-6”	440
5’-0”	460
5’-6”	480
6’-0”	500
6’-6”	520
7’-0”	540
7’-6”	560
8’-0”	580
8’-6”	600
9’-0”	620
9”-6”	640
10’-0”	660

Add or deduct 20 lbs for each 6 in. variance in bury depth.

Add for: 4 in. Flanged base - 5 lbs
6 in. Flanged base - 30 lbs

Deduct for: Two hose nozzles only - 25 lbs

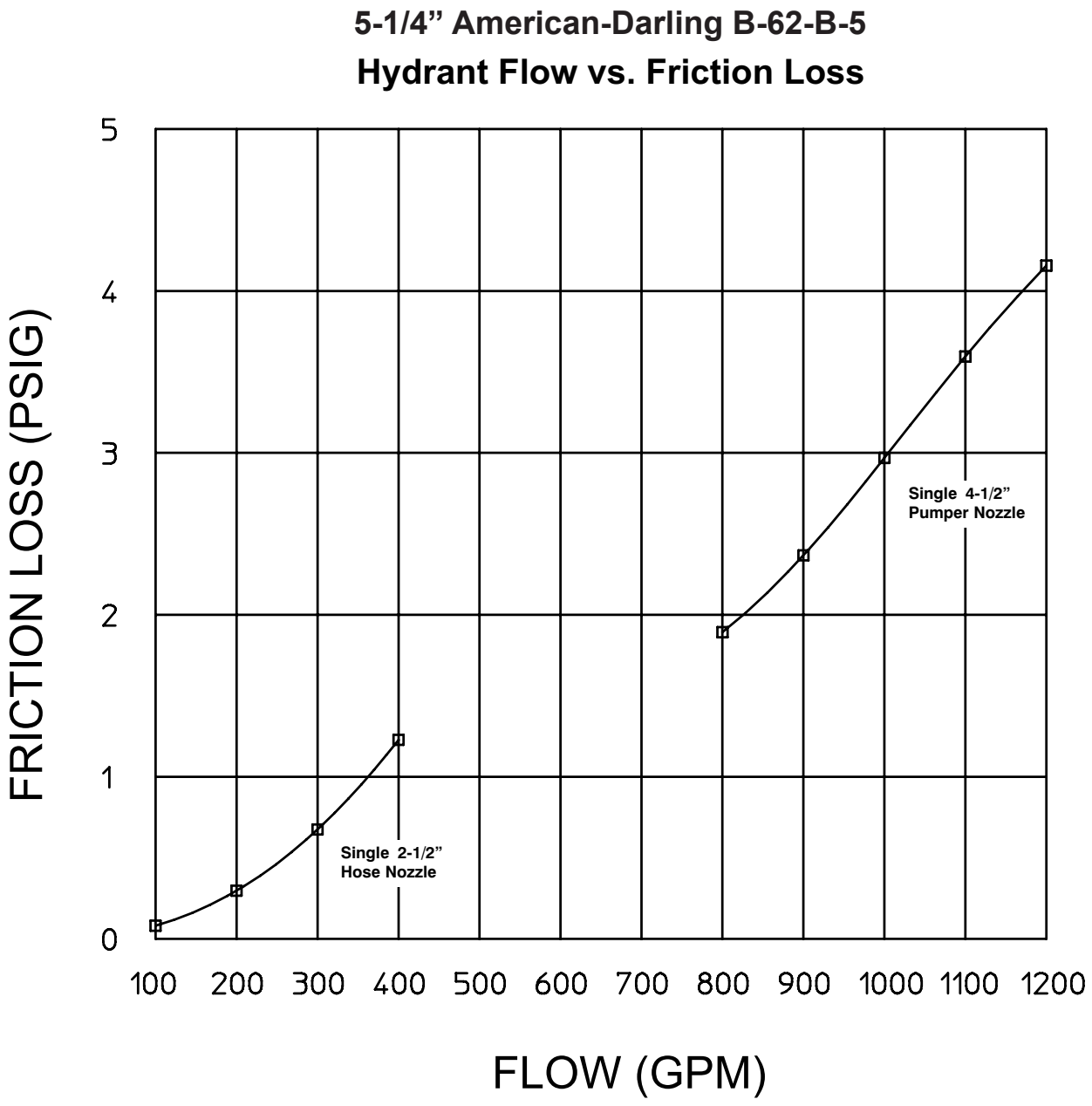
5-1/4" American-Darling B-62-B-5
Hydrant Flow vs. Friction Loss
FRICTION LOSS (PSIG)
0
1
2
3
4
5
100
200
300
400
500
600
700
800
900
1000
1100
1200
FLOW (GPM)
Single 2-1/2" Hose Nozzle
Single 4-1/2" Pumper Nozzle

AMERICAN Flow Control®
5-1/4" AMERICAN-DARLING® B-62-B-5 FIRE HYDRANT
SUBMITTAL SHEET

City Specification: _____ Quantity: _____

Direction to Open: ☐ Left (C.C.W.) ☐ Right (C.W.)

Operating Nut Size: _____ Shape _____ American Darling No. (If Known) _____

Nozzles

Configuration: (Check One)	Pumper Nozzle:	Hose Nozzle:
☐ Two Hose, One Pumper ☐ Two Pumpers @ 90° ☐ Two Hose, One Pumper; 20" CL to GL ☐ One Hose, Two Pumpers; 20" CL to GL	Storz: 4 in. 5 in. National Std ☐ Yes ☐ No Size ___ _____ _____ _____ Pitch Dia x _____T.P.I. _____ O. D. American-Darling Thread (If Known) _____ _____ _____ _____	National Std ☐ Yes ☐ No Size ___ _____ _____ _____ _____ Pitch Dia x _____T.P.I. _____ O. D. American -Darling Thread (If Known) _____ _____ _____ _____

Nozzle Cap Chains: ☐ Yes ☐ No

Depth of Trench:

Base Connection: (Check One)
☐ 4" MJ ☐ 6" MJ ☐ 8" MJ ☐ 6" Class 125 Flange ☐ 6" TYTON®
☐ 6" Plain End with Intergral MJ Gland ☐ 6" Vertical Entry ☐ 6" ALPHA™ ☐ 6" ALPHA™ XL

Paint Color: _____ _____ _____

UL Listed, FM Approved: ☐ Yes ☐ No

Other Requirements: (List)

AMERICAN Flow Control
American-Darling & Waterous
A Division of AMERICAN

NOTES:
1. Meets or exceeds requirements of ANSI/AWWA C502, latest revision, with 200 psig rated working pressure.
2. UL Listed and Approved by FM Approvals at 200 psig in allowable configurations.
3. Certified to NSF/ANSI 61 and NSF/ANSI 372.
4. TYTON® is a registered trademark of United States Pipe and Foundry Co., LLC.
5. ALPHA™ is a trademark of Romac Industries, Inc. (U.S. Patent 8,894,100)

Visit our website at http://www.american-usa.com/afc

5-1/4" AMERICAN-DARLING® B-62-B-5 INSTALLATION

This instruction is issued as a recommendation to the customer for the proper use of the AMERICAN Flow Control manufactured fire hydrants. AMERICAN recommends you follow the general Inspection and Installation guidelines outlined in AWWA Manual *M17 for Installation, Field Testing, and Maintenance of Fire Hydrants* and/or as recommended below. **WARNING: Special care should be taken in the installation, inspection and repair of pressure containing devices such as valves and hydrants. FAILURE TO FOLLOW PROPER PRACTICE AND GUIDELINES CAN RESULT IN SERIOUS INJURY OR DEATH. High pressure and water hammer, due to rapid opening or closing of a hydrant or valve, can also cause major damage to the hydrant, valve, water main, fire hose, or other attached equipment.**

Receiving Inspection

On receipt, inspect for direction of opening, correct nozzle threads and operating nuts and shipping damage.

Report any problems to carrier, note on bill of lading and have the driver sign your copy.

Installation

1. When hydrants are received, they should be handled carefully to avoid breakage and damage to flanges. Keep hydrants closed until they are installed. Protect stored hydrants from the elements.
2. **Before installation of hydrant, clean piping, base and drain ring of hydrant of any rocks, sand and/or foreign material. Check for loose bolts at base, ground line and cover. Tighten if necessary.**
3. Hydrants shall be located as shown or as directed and in a manner to provide complete accessibility, and also in such a manner that the possibility of damage from vehicles or injury to pedestrians will be minimized. Locate hydrants as detailed in AWWA M17 and/or in accordance with applicable fire codes, the requirements of local fire authority, or the applicable municipal design standard.
4. All hydrants shall stand plumb and shall have their nozzles parallel with or at right angles to the curb, with the pumper nozzle facing the curb, except that hydrants having two hose nozzles 90° apart shall be set with each nozzle facing the curb at the angle of 45°.
5. It is recommended practice to install an auxiliary or secondary gate valve in the lateral between the hydrant and the main to permit inspection and repair of the hydrant without shutting down mains. The use of AMERICAN Flow Control Series 2500 Resilient Wedge Gate Valves are recommended.
6. On traffic hydrants, surrounding soil must be adequately compacted around the barrel to support the lower barrel against transferring the force of a vehicular impact to the base. If the soil is too sandy and will not support the loads, pour a concrete pad around the barrel at or near the ground line at least 6 inches thick and 36 inches in diameter for barrel support.
7. Whenever a hydrant is set in soil that is pervious, drainage shall be provided at the base of the hydrant by placing coarse gravel or crushed stone mixed with coarse sand, from the bottom of the trench to at least 6 inches above the drain opening in the hydrant and to a distance of 1 foot around the elbow.
8. Whenever a hydrant is set in clay or other impervious soil, a drainage pit 2 feet in diameter and 3 feet deep shall be excavated below each hydrant and compactly filled with coarse gravel or crushed stone mixed with coarse sand under and around the elbow of the hydrant and to a level of 6 inches above the drain opening.
9. Where there is a high ground water level or other conditions which prevent the use of hydrants with drains, "non-draining" hydrants should be used. Hydrants of this type are provided with either a solid seat and/or plugged drains and are marked to pump after use. This is especially important to avoid damage to the hydrant in areas where freezing temperatures are likely. Non-draining hydrants should be checked upon installation and during semi-annual inspections to make sure the hydrant stays dry inside the lower and upper barrel.
10. Restrain hydrant movement with appropriate thrust blocking or restrained joint to prevent pipe and/or joint separation. If a concrete thrust block is installed, care should be taken to prevent blocking the hydrant drains if they are to remain operable.
11. When first installed, the hydrant should be operated from full closed to full open position and back to make sure no obstructions are present.
12. After the line, as well as the hydrant, have been hydrostatically tested, the hydrant should be flushed and checked for proper drainage, if applicable.

5-1/4" AMERICAN -DARLING® B-62-B-5 TESTING

AMERICAN Flow Control recommends you follow the General Inspection and Installation Guidelines outlined in AWWA Manual M17 for Installation, Field Testing, and Maintenance of Fire Hydrants and/or as recommended below. ANSI/AWWA C502 permits dry barrel hydrants with unplugged drain outlets to have an allowable leakage of 5 fluid oz/min (0.25 mL/s) through the drain valve. Therefore, the hydrant should not be opened at the same time that the water main is tested. The auxiliary valve should be closed during water main tests (see ANSI/AWWA C600). If it is necessary to test the hydrant and water main at the same time, the installer may elect to temporarily plug the drain outlets by installing a non-draining seat. **WARNING: Special care should be taken in the installation, inspection and repair of pressure containing devices such as valves and hydrants. FAILURE TO FOLLOW PROPER PRACTICE AND GUIDELINES CAN RESULT IN SERIOUS INJURY OR DEATH. High pressure and water hammer, due to rapid opening or closing of a hydrant or valve, can also cause major damage to the hydrant, valve, water main, fire hose, or other attached equipment.** After the hydrant is installed and, when possible, before backfilling (and after pressure testing the water main), the hydrant should be tested as follows:

Pressure Test at Main Pressure

WARNING: FAILURE TO RELIEVE PRESSURE CAN RESULT IN THE CAP BLOWING OFF, CAUSING INJURY OR DEATH.

1. Remove an outlet nozzle cap and open the hydrant valve enough turns to close the drain. Allow the hydrant to fill until water is at the bottom of the outlet nozzle.
2. Replace the outlet nozzle cap and leave it loose to permit all air to escape.
3. After all air has escaped, tighten the outlet nozzle cap.
4. Open the hydrant completely. (Opening the hydrant fully before all the air has escaped will compress the air and cause a safety hazard.)
5. Check for leakage at all joints and outlet nozzles.
6. If leakage is noted, safely repair or replace the necessary components or the entire hydrant using the instructions found in this publication.
7. Repeat the test until results are satisfactory.

Pressure Test at Pressures Above Main Pressure

WARNING: FAILURE TO RELIEVE PRESSURE CAN RESULT IN THE CAP BLOWING OFF, CAUSING INJURY OR DEATH.

1. Connect a pressure test pump to one of the hydrant's outlet nozzles.
2. Open an outlet nozzle cap. Open the hydrant valve a few turns. Allow the hydrant to fill until the water level is at the bottom of the outlet nozzle.
3. After all the air has escaped, tighten the outlet nozzle cap.
4. Open the hydrant completely.
5. Close the auxiliary valve.
6. Safely pump up to the test pressure but do not exceed the rated working pressure of the hydrant or system components.
7. Check for leakage at all joints and outlet nozzles.
8. Safely repair or replace hydrant, if necessary, using the instructions found in this publication.
9. Repeat the test until results are satisfactory.
10. Close the hydrant and relieve pressure. Open the auxiliary valve.

5-1/4" AMERICAN-DARLING® B-62-B-5 TESTING

Drainage Test for Dry Barrel Hydrants (Draining Type)

WARNING: FAILURE TO RELIEVE PRESSURE CAN RESULT IN THE CAP BLOWING OFF, CAUSING INJURY OR DEATH.

1. Following the pressure test, close the hydrant main valve.
2. Carefully remove one outlet nozzle cap and place the palm of one hand over the outlet nozzle opening.
3. Drainage should be sufficiently rapid to create a noticeable suction.
4. If the hydrant fails the drainage test, replace and tighten the nozzle cap, partially open the hydrant (1 or 2-turns) with the outlet nozzle caps on to create a pressure that will flush and clear the drain assembly. If this fails to restore proper drainage, then the drain assembly should be removed and inspected. If the drain assembly is clear, then the problem may be that the drain outlets are plugged from outside the hydrant. Repair will require digging down around the outside of the hydrant and clearing the drain outlets.

Placing a Hydrant Into Service

1. After testing and backfilling, the hydrant should be safely flushed and tested to be sure that it is bacteriologically safe before it is put into service.
2. Tighten the outlet nozzle caps so they will not be excessively tight, but tight enough to prevent their removal by hand.
3. Clean the hydrant exterior to remove dirt accumulated during installation. Touch up any areas where factory coating was damaged during handling or installation. Use an appropriate top coating or contact factory for touch-up coatings.

5-1/4" AMERICAN-DARLING B-62-B-5 OPERATION, INSPECTION, AND MAINTENANCE

Operation View Video

AMERICAN Flow Control recommends you follow the general Inspection and Installation guidelines outlined in AWWA Manual M17 for Installation, Field Testing, and Maintenance of Fire Hydrants and/or as recommended below. The thrust bearing hydrant requires a minimum of torque to operate. **WARNING: Special care should be taken in the installation, inspection and repair of pressure containing devices such as valves and hydrants. FAILURE TO FOLLOW PROPER PRACTICE AND GUIDELINES CAN RESULT IN SERIOUS INJURY OR DEATH. High pressure and water hammer, due to rapid opening or closing of a hydrant or valve, can also cause major damage to the hydrant, valve, water main, fire hose, or other attached equipment.** It is possible to damage the hydrant by forcing it beyond its limits of travel with excess torque; therefore:

1. Check direction of opening as marked on the hydrant cover.
2. To open, turn the operating nut until the main valve is fully open and the travel stop nut limits further opening. **Do not force the hydrant in the opening direction beyond fully-open as indicated by sudden resistance to turning**. If water does not flow when the hydrant is open, it is probably due to a closed valve upstream from the hydrant. Always open the hydrant completely, never only partially. A hydrant that is partially open will allow pressurized flow through the drain valve, which may wash away the soil from the area surrounding the base, or the partially open main valve may trap small stones or other debris between the valve seal and seat.
3. To close, turn the operating nut until the valve stops the flow. **It is not necessary to close this style of hydrant with great force.** Once the flow has stopped, turn the operating nut in the opening direction about 1/4 turn to take the strain off the operating parts of the hydrant. If the hydrant does not shut off completely, do not attempt to force the hydrant to close. Debris and small stones may be trapped in the valve seat and may be preventing the hydrant from closing. Partially open and close the hydrant several times to help dislodge the debris. If this does not work, safely remove the hydrant operating rod assembly, remove the debris and repair as detailed in subsequent sections of this manual.
4. **WARNING: FAILURE TO RELIEVE PRESSURE CAN RESULT IN THE CAP BLOWING OFF, CAUSING INJURY OR DEATH.** Make sure the auxiliary gate valve in the lateral between the main and the hydrant is closed and that the hydrant is not charged with pressure when removing caps.

Inspection

1. It is recommended that hydrants be inspected twice per year to ensure their satisfactory operation. After each use (especially in cold weather) hydrants should be specifically inspected for drainage.
2. Routine inspection should cover the points outlined in AWWA Manual M17 and include (but not be limited to) the following points:
   a. External inspection of paint, caps, chains, etc.
   b. Checking traffic type hydrants for damage to the breakaway feature.
   c. Using a listening device to check the main valve for leakage.
   d. Statically testing the hydrant to look for leakage at gaskets, caps, O-rings and drains.
   e. Verifying the hydrant drains properly.
   f. Cycling the hydrant from full open to full close.
   g. Check for routine lubrication needs which includes but may not be limited to loss of lubricant, nozzle caps and operating mechanism.
3. At time of inspection, flush the hydrant to remove any foreign material from the hydrant and the lateral. If necessary, flush the drains by filling the hydrant and then cycling open the main valve two times to force water out of the drains under pressure. If the hydrant is non-draining type, pump water out after flushing.

Maintenance View Video

AMERICAN Flow Control strongly recommends that you follow routine maintenance on fire hydrants as outlined in AWWA Manual M17 for Installation, Field Testing, and Maintenance of Fire Hydrants. The ease of operation and the frequency of repair depends on the condition of the water system and the maintenance given. Dirt, gravel and other foreign material in the hydrant may prevent it from closing or draining properly, which may result in damage to the hydrant main valve. Under most operating conditions, AMERICAN Flow Control recommends semi-annual lubrication and inspection of fire hydrants.

Note: Where grease is specified, use an AMERICAN Flow Control recommended food grade grease.

1. Twice per year, open the hydrant completely and flush for several minutes. Open and close valve to make sure it works properly, and check for leaks.
2. Remove a cap and verify that the hydrant is draining properly. After the main valve is closed, the water in the hydrant should drain rapidly. If it does not, the drain ports may be clogged. To clear drain ports, install nozzle cap, and tighten until water tight, then open hydrant two or three turns for several minutes. This will leave drain port partially open and permit water pressure to wash out the obstruction. If this method is unsuccessful, remove the operating rod assembly and clean the drain mechanism. If neither of above methods permits water to drain, it indicates that the drainage area around the hydrant base should be rebuilt.
3. If it is necessary to add lubricant, turn operating nut back from tight closed position until it turns freely, then remove pipe plug in top of operating nut and pump food grade grease into operating nut. DO NOT OVER PRESSURE LUBRICANT OR OVERFILL HYDRANT WITH LUBRICANT. FAILURE TO FOLLOW THESE INSTRUCTIONS WILL RESULT IN HARD OPERATION OF THE HYDRANT. SHOULD HARD OPERATION OCCUR REFER TO "TROUBLE SHOOTING GUIDE" DETAILED IN THIS MANUAL.
4. Remove all nozzle caps, clean rust or corrosion from threads of nozzles and caps, and replace cap gaskets if necessary. Apply a light coat of grease to nozzle threads before replacing cap.

5-1/4" AMERICAN-DARLING® B-62-B-5 TROUBLESHOOTING GUIDE

WARNING: Special care should be taken in the installation, inspection and repair of pressure containing devices such as valves and hydrants. FAILURE TO FOLLOW PROPER PRACTICE AND GUIDELINES CAN RESULT IN SERIOUS INJURY OR DEATH. High pressure and water hammer, due to rapid opening or closing of a hydrant or valve, can also cause major damage to the hydrant, valve, water main, fire hose, or other attached equipment.

Problem	Solution
1. Operating nut turns freely but hydrant does not open.	1. Inspect rod coupling for breakage and ensure rod pin is properly installed.
2. Hydrant will not shut off or ground around hydrant is highly saturated.	2. Close hydrant and remove nozzle cap. Check with listening device to determine if water is passing by main valve. If it is determined that the main valve is leaking, try the following: a. Flush hydrant in fully open position (watch to see if rocks or other foreign objects flush out of the barrel). b. After flushing for several minutes, shut off the hydrant. Watch for several minutes to see if flow stops. Place hand over open hose nozzle; suction should be felt, indicating hydrant is no longer leaking and drains are working properly. c. If flushing does not solve the problem, it would indicate that something is trapped or has cut the main valve rubber. Safely follow the seat removal instructions to replace the valve. Check threads on bronze seat to be sure that it is not damaged. If threads appear worn or bent, replace the bronze seat. d. If replacing the valve does not stop the leakage, bolting at the hydrant shoe may be loose or the base gasket is damaged. The hydrant must be excavated to make the repair.
3. External leakage is noticed around the operating nut.	3. This indicates that O-rings are cut or missing. Replace o-rings as referenced in the disassembly and repair instructions.

Problem	Solution
4. Operating nut is extremely hard to turn.	4. Try to turn the operating nut. If the nut turns, carefully turn the nut back from a tight closed position until it turns freely. Remove the pipe plug in the top of the operating nut. If necessary, add food grade grease to the operating nut. DO NOT OVERPRESSURE THE LUBRICANT OR OVERFILL THE HYDRANT WITH LUBRICANT. FAILURE TO FOLLOW THESE DIRECTIONS MAY RESULT IN HARD OPERATION OF THE HYDRANT. ALWAYS FULLY OPEN AND CLOSE THE HYDRANT AFTER LUBRICATING. Replace the pipe plug taking care to replace the thread sealant. The hydrant should cycle freely. If this does not solve the problem, remove the operating nut. Verify the hydrant has not been over lubricated and inspect the threads of the operating nut and upper rod. Inspect the thrust washer to ensure it is lubricated and is undamaged. Replace and/or lubricate the thrust washer if necessary. If this does not solve the problem, remove the hydrant seat and flush thoroughly, then reassemble. **Note: Where grease is specified, use an AMERICAN Flow Control recommended food grade grease.**
5. Water is dripping around nozzles.	5. Close hydrant and remove nozzle cap. Replace cap gasket. Check the nozzle to be sure it is properly installed.
6. Hydrant will not drain properly.	6. Check to be sure the water table has not risen too high to allow for drainage. Flush hydrant to be sure drains are clear. Open hydrant slowly several turns while leaving caps firmly in place to ensure hydrant drains are clear. Close hydrant and repeat this procedure. Do this slowly several times. If problem is not corrected, excavate the hydrant to see if concrete or other materials have blocked the drain outlets.

5-1/4" AMERICAN-DARLING® B-62-B-5 PARTS LIST

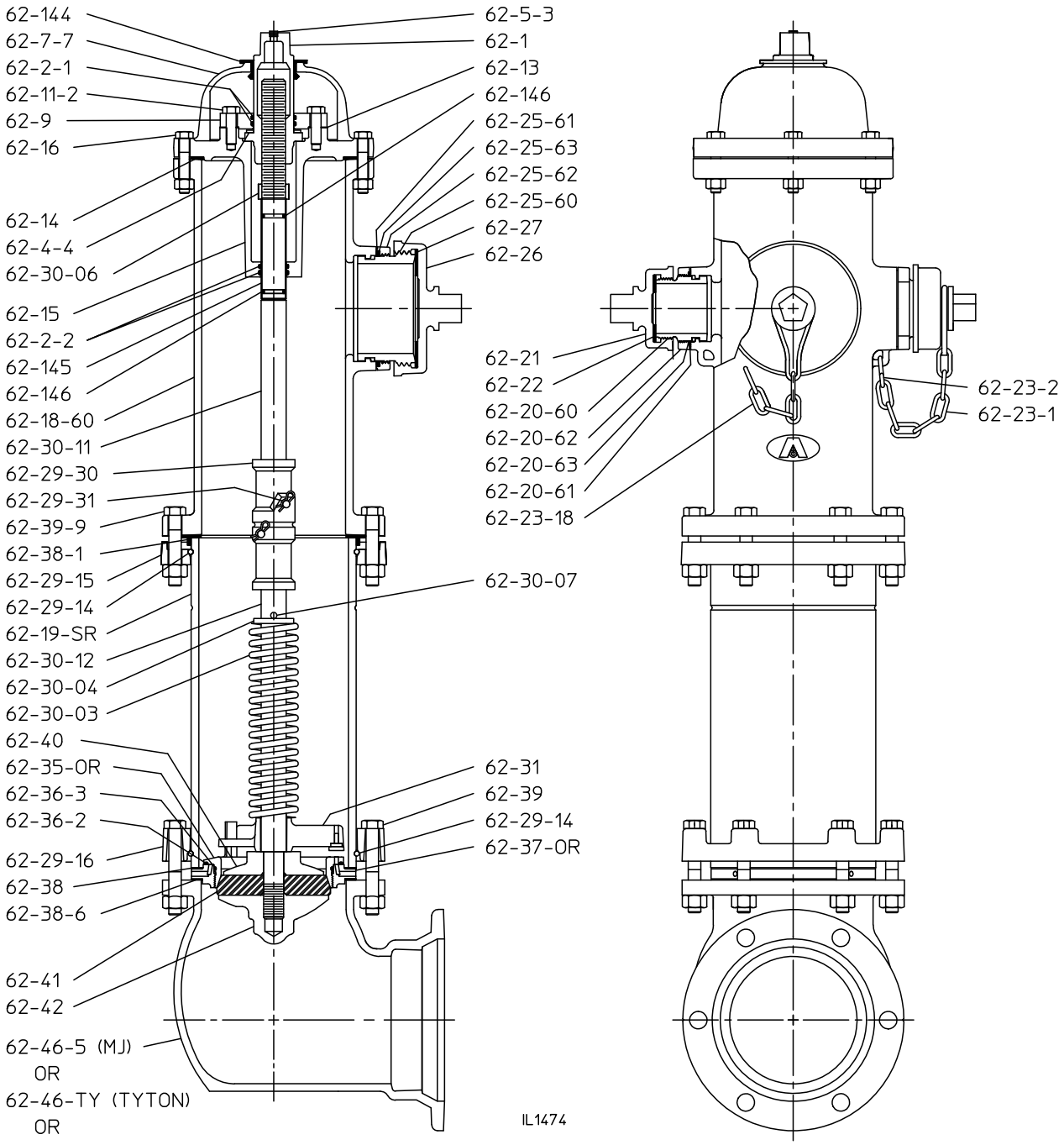

5-1/4" AMERICAN-DARLING® B-62-B-5 PARTS LIST

Part No.	Qty.	Description	Material
62-1	1	Operating Nut	Bronze
62-2-1	2	Cover O-ring	Buna N
62-2-2	2	Housing O-ring	Buna N
62-4-4	1	Thrust Washer	Nylatron
62-5-3	1	Pipe Plug	Stainless Steel
62-7-7	1	Weather Cover	Gray Iron
62-9	1	Housing Cover	Gray Iron
62-11-2	4	Housing Cover Cap Screw	Plated Steel
62-13	1	Housing Cover Gasket	Fiber
62-14	1	Housing Gasket	Composition Rubber
62-15	1	Housing	Ductile Iron
62-16	6	Housing Bolt and Nut	Plated Steel
62-18-60	1	Upper Barrel	Ductile Iron
62-19-SR	1	Lower Barrel	Ductile Iron
62-20-60	2	Hose Nozzle	Bronze
62-20-61	2	Hose Nozzle O-ring Seal	Buna N
62-20-62	2	Hose Nozzle Retainer	Ductile Iron
62-20-63	2	Hose Nozzle Retainer Washer	Teflon
62-21	2	Hose Cap	See Note 8
62-22	2	Hose Cap Gasket	Rubber
62-23-1	1 Per Nozzle	Hose Cap Chain	Steel
62-23-2	1 Per Nozzle	S Hook	Steel
62-23-18	1 Per Nozzle	Pumper Cap Chain	Steel
62-25-60	1 or 0	Pumper Nozzle	Bronze
62-25-61	1 Per Nozzle	Pumper Nozzle O-ring Seal	Buna N
62-25-62	1 Per Nozzle	Pumper Nozzle Retainer	Ductile Iron
62-25-63	1 Per Nozzle	Pumper Nozzle Retainer Washer	Teflon
62-26	1 Per Nozzle	Pumper Cap	See Note 8
62-27	1 Per Nozzle	Pumper Cap Gasket	Rubber
62-29-14	2	Snap Ring	Stainless Steel
62-29-15	1	Breakable Flange	Ductile Iron
62-29-16	1	Base Flange	Ductile Iron
62-29-30	1	Rod Coupling	Epoxy Coated Gray Iron
62-29-31	2	Rod Coupling Pin and Clip Pin	Stainless Steel
62-30-03	1	Spring	Stainless Steel
62-30-04	1	Spring Plate	Stainless Steel
62-30-06	1	Travel Stop Nut	Bronze
62-30-07	1	Spring Plate Pin	Stainless Sreel
62-30-11	1	Upper Rod	Steel
62-30-12	1	Lower Rod	Steel
62-31	1	Drain Lever	Bronze
62-35-OR	1	Hydrant Seat	Bronze
62-36-2	1	Hydrant Seat O-ring-Outside	Buna N

5-1/4" AMERICAN-DARLING® B-62-B-5 PARTS LIST

Part No.	Qty.	Description	Material
62-36-3	1	Hydrant Seat O-ring-Inside	Buna N
62-37-OR	1	Drain Ring	Bronze
62-38	2	Drain Ring Gasket	Composition Rubber
62-38-1	1	Barrel Gasket	Composition Rubber
62-38-6	1	Base Gasket	Composition Rubber
62-39	8	Base Bolt and Nut	Stainless Steel
62-39-9	8	Barrel Bolt and Nut	Plated Steel
62-40	1	Valve Top	Gray Iron
62-41	1	Hydrant Valve	EPDM Rubber
62-42	1	Valve Bottom	Gray Iron
62-46-2	1	Flanged Base	Ductile Iron
62-46-2A	1	Vertical Entry Base	Ductile Iron
62-46-5	1	Mechanical Joint Base	Ductile Iron
62-46-PE	1	Mechanical Joint Plain End Base	Ductile Iron
62-46-TY	1	TYTON® Base	Ductile Iron
62-46-6AA	1	ALPHA™ Restraint Joint Base	Ductile Iron
62-144	1	Weather Shield	Rubber
62-145	1	Rod Sleeve	Bronze
62-146	2	Sleeve O-ring	Buna N

ALPHA restraint joints will accommodate the following pipe types and sizes:

ALPHA

- Ductile iron per AWWA C151
- PVC per ASTM D1785 (Schedule 40 and 80)
- PVC per ASTM D2241 (SDR 21)
- PVC per AWWA C900
- HDPE per AWWA C906 (SDR 9, 11, 13.5, and 17)

ALPHA XL

- Gray iron (Class A, B, C, and D)

Nominal Size (in)	ALPHA OD Range (in)	ALPHA XL OD Range (in)
6	6.60 - 7.00	6.90 - 7.10

Notes

1. Size and shape of nut on operating nut and cap, threading on nozzles and caps, and the direction of opening made to specifications.
2. Cap chains are not furnished unless specified.
3. Working pressure 200 psig, Factory test pressure 400 psig.
4. Hydrant meets or exceeds the ANSI/AWWA C502 standard.
5. Upper barrel can be rotated 360°.
6. UL Listed and Approved by FM Approvals at 200 psig in allowable configurations.
7. Certified to NSF/ANSI Standard 61 and NSF/ANSI 372.
8. National Standard and other common cap configurations are constructed of ductile iron. Other offerings may be constructed of gray cast iron.
9. Nominal turns to open is 22.
10. TYTON® is a registered trademark of United States Pipe and Foundry Co., LLC.
11. ALPHA™ is a trademark of Romac Industries, Inc. (U.S. Patent 8,894,100)

Spare Parts

Spare parts shall include the following:

O-ring for housing, O-ring for housing cover, O-ring for nozzles, barrel flange gasket, base flange gasket, main valve seat gasket or O-ring, hydrant valve and cap gaskets.

For traffic model hydrants, also include traffic repair kits.

5-1/4" AMERICAN-DARLING® B-62-B-5 REPAIR INSTRUCTIONS

Disassembling the Hydrant

View Video

WARNING: Special care should be taken in the installation, inspection and repair of pressure containing devices such as valves and hydrants. FAILURE TO FOLLOW PROPER PRACTICE AND GUIDELINES CAN RESULT IN SERIOUS INJURY OR DEATH. High pressure and water hammer, due to rapid opening or closing of a hydrant or valve, can also cause major damage to the hydrant, valve, water main, fire hose, or other attached equipment.

Removing Internal Parts

One person with hand tools and a lightweight seat wrench can quickly remove all the working parts, including hydrant valve, drain lever and hydrant seat. To repair, it is not necessary to excavate American-Darling hydrants; merely remove the internal parts.

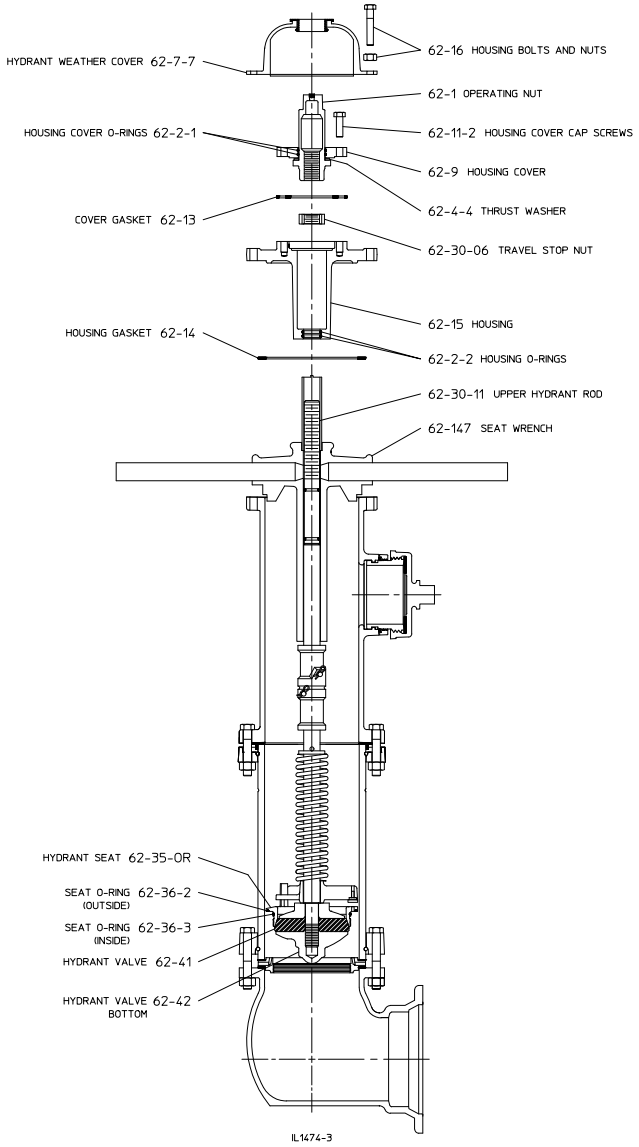

Directions for Removing Internal Parts of 5-1/4" AMERICAN-DARLING B-62-B-5 Hydrants

1. **Shut off water line leading to hydrant making sure the hydrant is not under pressure. FAILURE TO FOLLOW PROPER PRACTICE AND GUIDELINES CAN RESULT IN SERIOUS INJURY OR DEATH.**
2. Partially open hydrant valve to relieve trapped pressure.
3. Standing to the side of the hydrant and away from the direction of the hydrant cap(s), loosen one of the hose caps to relieve any pressure that may be present in the hydrant barrel. Close hydrant valve. From full open to full close takes approximately 22 turns.
4. Remove hydrant weather cover (62-7-7) with weather shield by removing two bolts and nuts (62-16).
5. Remove the four housing cover cap screws (62-11-2) on housing cover (62-9).
6. Unscrew and remove operating nut (62-1) from upper hydrant rod (62-30-11) together with housing cover (62-9) and thrust washer (62-4-4).
7. Use top of seat wrench to unscrew and remove travel stop nut (62-30-06).
8. Remove remaining housing bolts (62-16) then lift out housing (62-15). Inspect O-rings and replace if necessary. Special care must be taken to avoid damaging O-rings (62-2-2).
9. Place seat wrench over upper hydrant rod (62-30-11) and turn to the left (counterclockwise) to unscrew bronze hydrant seat (62-35-OR) and lift out hydrant rod with completely assembled internal working parts attached, including hydrant seat, hydrant valve, drain lever and seat O-rings.

   NOTE: When a supply of gaskets and O-rings are available, always install new ones when reassembling the hydrant. Clean dirt from O- ring grooves.

Reassembling the Hydrant

View Video

WARNING: Special care should be taken in the installation, inspection and repair of pressure containing devices such as valves and hydrants. FAILURE TO FOLLOW PROPER PRACTICE AND GUIDELINES CAN RESULT IN SERIOUS INJURY OR DEATH. High pressure and water hammer, due to rapid opening or closing of a hydrant or valve, can also cause major damage to the hydrant, valve, water main, fire hose, or other attached equipment.

1. When the hydrant valve is replaced, use a locking compound to secure the valve ball assembly (parts 62-40, 62-41, 62-42). Tighten lower valve bottom (62-42) to 75 ft-lbs. of torque.
2. Thread the valve ball assembly to the lower hydrant rod. Grease the seat O-rings (62-36-2, 62-36-3) and lower the parts through the hydrant barrel.
3. When the assembly has made contact with the drain ring, push the assembly straight down. To avoid cross threading, turn the seat wrench counterclockwise until an ajar is felt. This ajar indicates that the thread starts are properly aligned.
4. Turn the seat wrench clockwise approximately seven turns until it is tight. Pull upward on the rod to ensure it is fastened to the drain ring (62-37-or)Replace the housing gasket (62-14).
5. Grease the threads on the upper hydrant rod (62-30-11) and the O-rings (62-2-2) in the housing.
6. Slip the housing (62-15) over the rod. Note: Special care should be taken to avoid damaging housing O-rings. Thread the travel stop nut (62-30-06) onto the upper rod until contact is made with the brass rod sleeve. Care should be taken to not over tighten the travel stop nut or damage can occur to the sleeve.
7. Put the cover gasket (62-13) in place and then thread the bronze operating nut (62-1) onto the rod.
8. Bolt up the housing (62-15) using approximately 60 ft-lbs of torque.
9. Tighten the operating nut with the operating wrench and put the cover cap screws (62-11-2) in place. Then replace the weather cover (62-7-7) and bolt it up properly using approximately 60 ft-lbs of torque.
10. Carefully pressurize the hydrant and check for visual leaks.

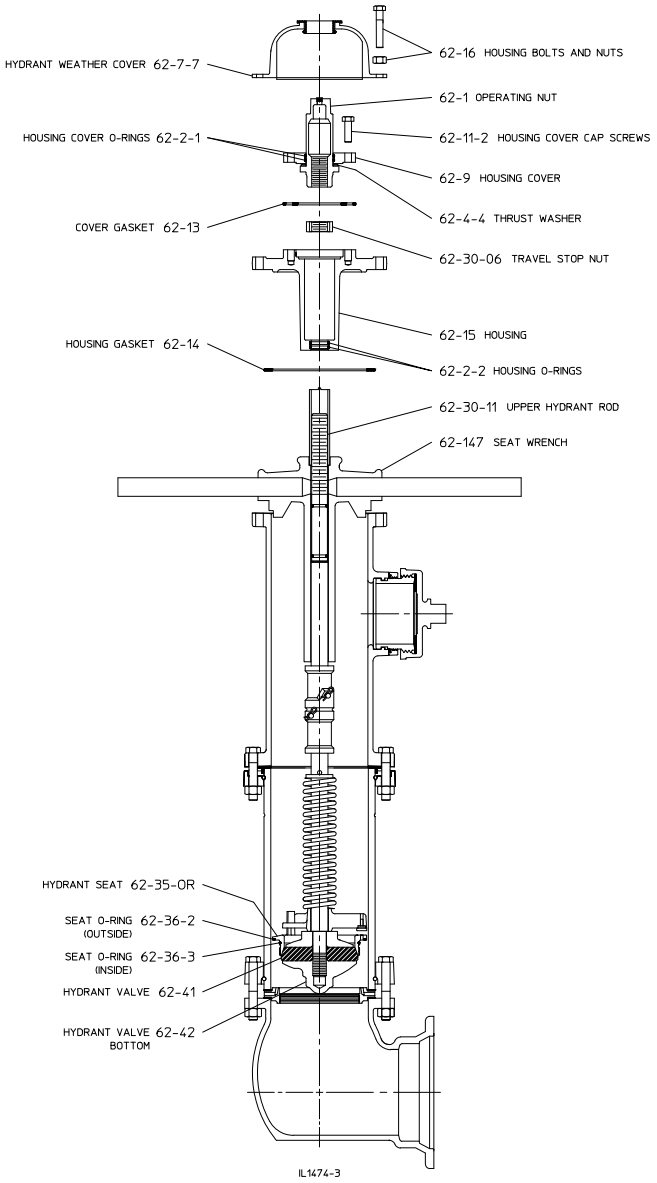

Note: Where grease is specified, use an AMERICAN Flow Control recommended food grade grease.

5-1/4" AMERICAN-DARLING® B-62-B-5 TRAFFIC DAMAGE REPAIR

View Video

WARNING: Special care should be taken in the installation, inspection and repair of pressure containing devices such as valves and hydrants. FAILURE TO FOLLOW PROPER PRACTICE AND GUIDELINES CAN RESULT IN SERIOUS INJURY OR DEATH. High pressure and water hammer, due to rapid opening or closing of a hydrant or valve, can also cause major damage to the hydrant, valve, water main, fire hose, or other attached equipment.

Should a hydrant be struck by a vehicle such that the upper barrel is seperated/broken from the lower barrel, the following procedure should be followed to reassemble the hydrant and make it operational. (A traffic damage repair kit for the specific 5-1/4" American-Darling B-62-B-5 hydrant is required to perform this procedure.)

1. Although it is possible to repair break features of the hydrant under pressure, the extent of a traffic impact may be unknown. It is considered safe practice to close the auxilliary valve ahead of the hydrant, or use another means to cut off flow and pressure to the hydrant.
2. Inspect the upper barrel (62-18-60) to determine if any of the components are fractured. Traffic impact usually results in a fractured traffic flange (62-29-15), broken or bent flange bolts (62-39-9), a fractured rod coupling (62-29-30) and damage to the gasket between the upper and lower barrels (62-38-1). Should cracking or fracture of any component occur, it should be replaced.
3. The operating nut (62-1) should be rotated to verify that it turns smoothly and easily and that the hydrant rod is centered in the barrel. (Should there be any binding or difficulty in turning the operating nut, the upper barrel should be disassembled and inspected for damaged parts.)
4. Remove the broken coupling (62-29-30) and verify that the upper hydrant rod (62-30-11) is not bent or damaged.
5. Inspect the lower barrel (62-19-SR) and clean any dirt or debris from the gasket seating surface.
6. Inspect the lower barrel flange (62-29-15) to determine that it will receive the new bolts contained in the traffic damage repair kit.
7. Turn the operating nut to place the hydrant in the full open position; this will extend the upper hydrant rod and ease the replacement of the rod coupling (62-29-30). Remove the broken rod coupling segment from the lower hydrant rod and verify that the rod end will receive the new coupling.
8. Orient the new rod coupling such that the end with the word "TOP" is placed on the upper hydrant rod such that the hole in the coupling aligns with the half hole on the hydrant rod. Lock coupling in place with stainless steel coupling pin (62-29-31) and clip pin.
9. Place new breakable flange (62-29-15) and new snap ring (62-29-14) on lower barrel section. Place new gasket (62-38-1) on lower barrel section.
10. Lift the upper barrel assembly and position it over the lower barrel while aligning the hydrant rod coupling on the upper hydrant rod with the lower hydrant rod such that the hole in the coupling aligns with the half hole on the lower hydrant rod. Slide the coupling over the lower valve rod and insert coupling pin and clip pin. Lift upper barrel assembly to insure upper and lower rods are connected to coupling.
11. Turn operating nut in the closing direction which will lower the upper barrel onto the lower barrel. Rotate the hydrant to position the hose and pumper nozzles in the desired orientation to the curb. Be careful to position the gasket to achieve full coverage of the end faces of the upper and lower barrels. (Note: While lowering the upper section onto the lower section, a pinch point exists. Keep fingers clear.)
12. After nuts have been started on all bolts, tighten the flange bolts in an alternating pattern to a torque value of between 55 and 60 ft.- lbs.
13. Once the hydrant has been reassembled, it is essential that it be operated to determine that it is fully functional via the following procedure.
14. Open the auxiliary or secondary gate valve in the lateral to allow water pressure to the hydrant.
15. The hose and pumper caps should be tightened and the operating nut turned in the open direction. After cracking the valve seat open, the operating nut should rotate freely without binding.

Traffic Damage Repair Kit Parts		
62-29-31	2	Rod Coupling and Clip Pin
62-29-30	1	Breakable Rod Coupling
62-29-14	1	Snap Ring
62-29-15	1	Traffic Flange
62-38-1	1	Barrel Gasket
62-39-9	8	Barrel Bolts and Nuts

5-1/4" AMERICAN-DARLING® B-62-B AMLOK NOZZLE REPLACEMENT (FOR HYDRANTS BUILT PRIOR TO 2006)

View Video

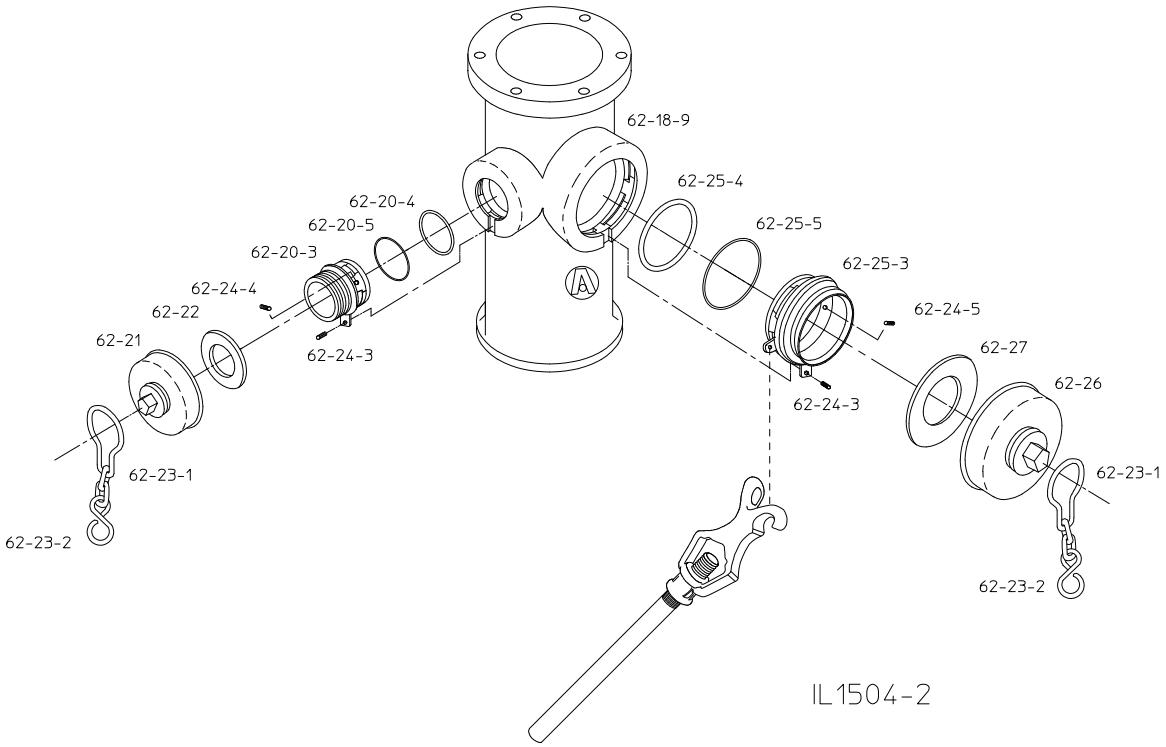

Amlok Nozzle Replacement

WARNING: POTENTIAL HYDRANT CAP HAZARD. FAILURE TO RELIEVE PRESSURE CAN RESULT IN THE CAP BLOWING OFF, CAUSING SERIOUS INJURY OR DEATH. Make sure the auxiliary gate valve in the lateral between the main and the hydrant is closed and that the hydrant is not charged with pressure when removing caps.

Step 1

Remove the nozzle cap. Remove the 5/16 in. internal set screw (62-24-4 or 62-24-5) with a 5/32 in. hex head allen wrench. Unscrew the 5/16 in. external slotted screw (62-24-3) out of the lug on the nozzle.

Step 2

Use a universal spanner wrench or American Flow Contrlol nozzle wrench to rotate nozzle 1/8 turn clockwise. The nozzle can now be pulled from the hydrant barrel.

Step 3

Remove O-ring gasket from the nozzle boss. Insert new O-ring and lubricate with food grade grease. Place the nozzle spacer O-ring (62-20-5) or (62-25-5) on the nozzle directly behind the nozzle collar. Place a small amount of lubricant on the plain end of the new nozzle.

Note: Where grease is specified, use an AMERICAN Flow Control recommended food grade grease.

Step 4

Insert the new nozzle into the hydrant barrel with the tapped lug at the 7:30 position. Push the nozzle home and rotate counterclockwise until the nozzle stops.

Step 5

Insert the 5/16 in. slotted nozzle set screw (62-24-3) into the tapped lug on the nozzle. Tighten the set screw into the slot on the hydrant barrel to remove any play in the nozzle. The top of the set screw should be flush with the surface of the nozzle lug.

Step 6

Start internal set screw (62-24-4) or (62-24-5) into the threaded hole inside the nozzle. Apply Loctite Thread Sealant #545 or equivalent to the external threads of the set screw. Continue to turn the set screw into the threaded hole with a 5/32 in. hex head allen wrench until it stops. **DO NOT TIGHTEN**. Replace the nozzle cap and hydrostatically test the hydrant.

5-1/4” AMERICAN-DARLING® B-62-B-5 NOZZLE REPLACEMENT MECHANICALLY ATTACHED PUMPER NOZZLE (FOR HYDRANTS BUILT BEGINNING IN 2006)

View Video

WARNING: POTENTIAL HYDRANT CAP HAZARD. FAILURE TO RELIEVE PRESSURE CAN RESULT IN THE CAP BLOWING OFF, CAUSING SERIOUS INJURY OR DEATH. Make sure the auxiliary gate valve in the lateral between the main and the hydrant is closed and that the hydrant is not charged with pressure when removing caps.

Removal

1. Remove cap.
2. Place wrench on the retainer so it engages the rounded protrusions and unthread from nozzle.

   Note: Removal of the 4 in. and 5 in. Storz hydrant nozzle requires the use of the hinged pumper-nozzle retainer wrench (AMERICAN Flow Control Part No. 82766).
3. Rotate nozzle counter-clockwise until the four lugs on the nozzle disengage the recesses in the nozzle section socket which will allow the nozzle to be removed.

Installation

1. Thread retainer onto the retainer threads of the pumper nozzle.
2. Place washer over nozzle starting from the end with the four lugs and into the chamfer recess in the retainer.
3. Grease O-ring and place it over nozzle starting from the end with the four lugs and against the washer.
4. Insert the nozzle/retainer/washer/O-ring subassembly into the socket in the nozzle section. Rotate the sub-assembly clockwise until it stops with the four lugs on the nozzle fully engaged in the antirotation recesses in the socket. If it cannot be rotated, turn the retainer in a direction to allow the nozzle to be inserted further into the socket so the subassembly rotates clockwise against the stops.
5. Hand tighten the retainer to press O-ring against the face of the socket.Place wrench on the retainer so it engages the rounded protrusions, tighten firmly.

   Note: Installation of the 5 in. Storz hydrant nozzle requires the use of the hinged pumpernozzle retainer wrench (AMERICAN Flow Control Part No. 82766).
6. Clean rust or corrosion from cap threads and replace cap gasket if necessary. Apply a light coat of grease to the nozzle threads and install the cap.
7. Cap all nozzles and open the hydrant valve, check the area around the repaired nozzle for leaks.

   Note: Where grease is specified, use an AMERICAN Flow Control recommended food grade grease.

Mechanically Attached Pumper Nozzle

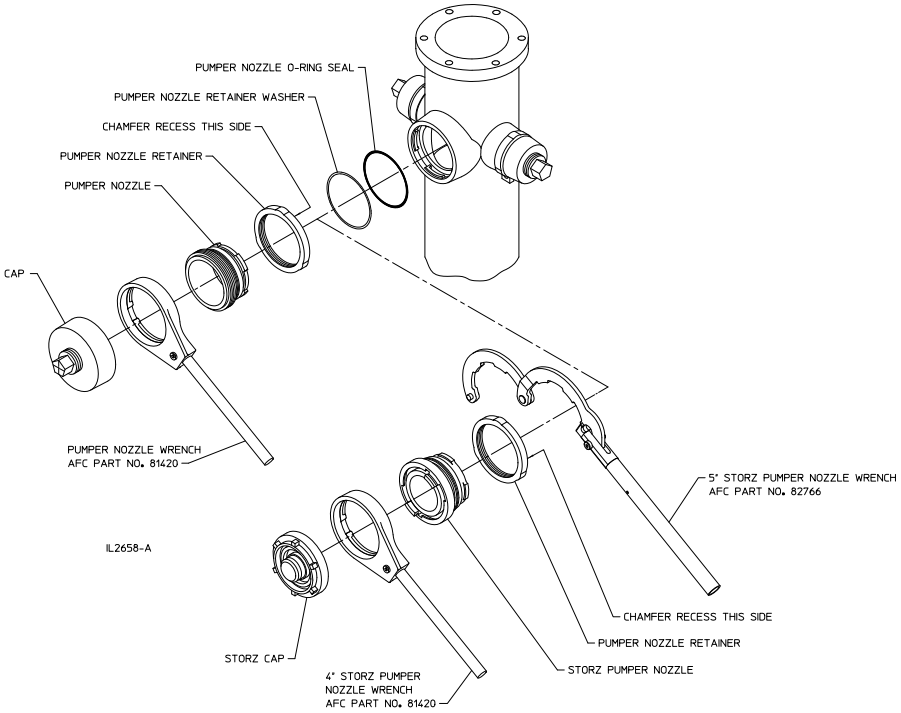

5-1/4" AMERICAN-DARLING® B-62-B-5 NOZZLE REPLACEMENT MECHANICALLY ATTACHED 2-1/2" HOSE NOZZLE (FOR HYDRANTS BUILT BEGINNING IN 2006)

View Video

WARNING: POTENTIAL HYDRANT CAP HAZARD. FAILURE TO RELIEVE PRESSURE CAN RESULT IN THE CAP BLOWING OFF, CAUSING SERIOUS INJURY OR DEATH. Make sure the auxiliary gate valve in the lateral between the main and the hydrant is closed and that the hydrant is not charged with pressure when removing caps.

Removal

1. Remove cap.
2. Place wrench on the retainer so it engages the rounded protrusions and unthread from nozzle.
3. Rotate nozzle counter-clockwise until the two lugs on the nozzle disengage the recesses in the nozzle section socket which will allow the nozzle to be removed.

Installation

1. Thread retainer onto the retainer threads of the hose nozzle. NOTE: In cases where hose nozzle threads having a larger diameter than the retainer, the retainer will need to be assembled from the lug side only.
2. Place washer over nozzle starting from the end with the two lugs and into the chamfer recess in the retainer.
3. Grease O-ring and place it over nozzle starting from the end with the two lugs and against the washer.
4. Insert the nozzle /retainer/washer/O-ring subassembly into the socket in the nozzle section. Rotate the subassembly clockwise until it stops with the lugs on the nozzle fully engaged in the anti-rotation recesses in the socket. If it cannot be rotated, turn the retainer in a direction to allow the nozzle to be inserted further into the socket so the subassembly rotates clockwise against the stops.
5. Hand tighten the retainer to press O-ring against the face of the socket.
6. Place Hose Nozzle Wrench on Retainer so it engages the rounded protrusions, and tighten firmly. Apply no more than 190 ft-lbs. of torque.
7. Clean rust or corrosion from cap threads and replace cap gasket if necessary. Apply a light coat of grease to the nozzle threads and install the cap.

   NOTE: Where grease is specified, use an AMERICAN Flow Control recommended food grade grease.

Mechanically Attached Hose Nozzle

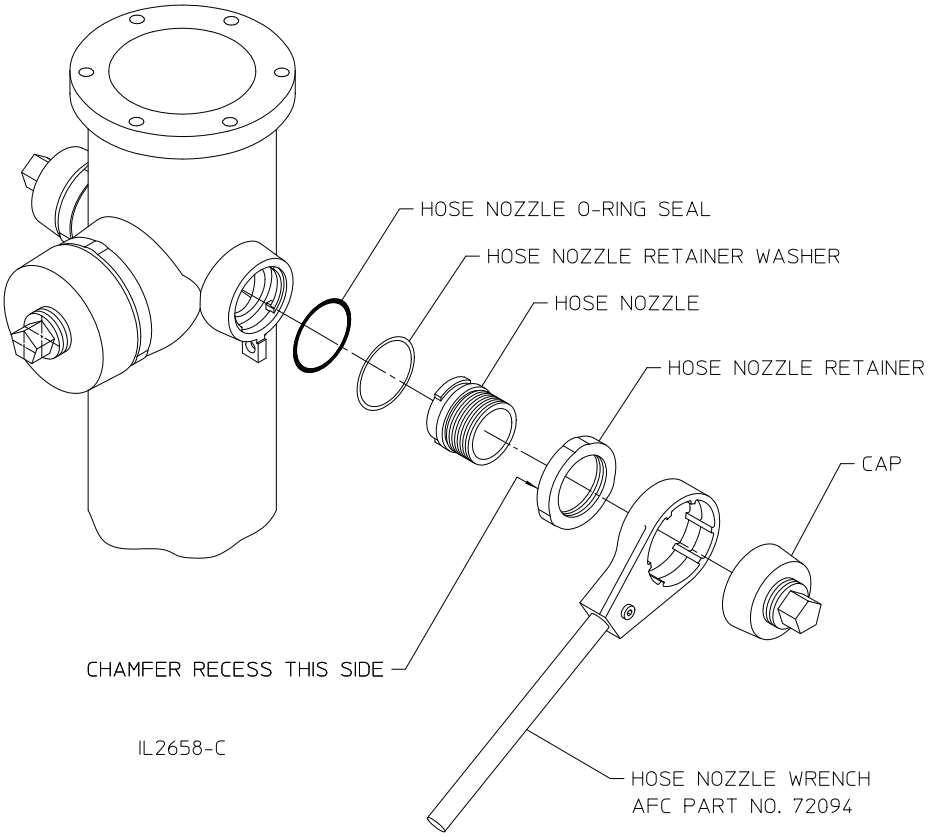

5-1/4" AMERICAN-DARLING® B-62-B-5 EXTENSION INSTRUCTIONS

View Video

The **5-1/4" American-Darling B-62-B-5** hydrant is extended at the barrel flange above the ground line, eliminating the need for excavation.

Parts Required for Hydrant Extension

62-19X-SR	1	Extension Barrel*
62-29-13	2	Unbreakable Flanges
62-29-14	2	Snap Rings
62-29-31	2[1]	Rod Coupling Pins
62-29-40	1	Unbreakable Rod Coupling
62-30-15	1	Extension Rod
62-38-1	2	Barrel Gaskets
62-39-9	8	Barrel Bolts and Nuts

[1] Two required for extension. Three included in kit.

*Extension barrels and rods are available in increments of 6", starting at 6" long.

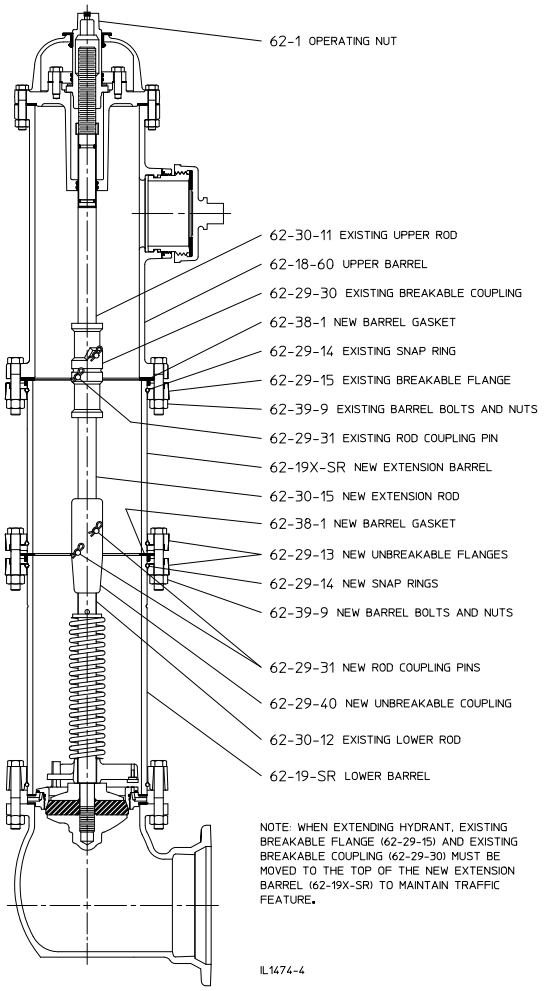

NOTE: The use of extension lengths made by more than one extension kit is not recommended. When combined extension kit and existing trench depth exceeds 9 feet, replace existing lower rod with appropriate length lower rod instead of using rod extension. When combined length exceeds 12 feet, rod guides are recommended for lower rod.

Procedure

1. Close hydrant valve. It is considered safe practice to close the auxiliary valve ahead of the hydrant, or use another means to cut off flow and pressure to the hydrant. Always standing to the side of the hydrant and away from the direction of the hydrant caps, loosen one of the hose caps to relieve any pressure that may be present in the hydrant barrel. **WARNING: FAILURE TO RELIEVE PRESSURE CAN RESULT IN THE CAP BLOWING OFF, CAUSING SERIOUS INJURY OR DEATH.**
2. Remove existing barrel bolts and nuts (62-39-9).
3. Raise upper barrel (62-18-60) from lower barrel (62-19-SR) by turning operating nut (62-1) in the opening direction and lifting the upper barrel at the same time to prevent the hydrant valve from opening.
4. Raise the upper barrel until there is sufficient separation from the lower barrel to permit removal of the lower rod coupling pin (62-29-31) with clip pin and **block upper barrel in this position to ensure protection while removing the coupling pins.**
5. Remove lower rod coupling pin with clip pin. Remove upper barrel assembly. **Use proper lifting techniques to avoid injury.**
6. Remove existing snap ring (62-29-14) and existing breakable flange (62-29-15) and set aside for re-use. **Breakable flange** (62-29-15) since 2015 has four cast notches at ninety degrees on the outside diameter. Breakable flange from prior to 2015 has cast marking "BREAK FLANGE". **Unbreakable flange** (62-29-13) lacks notches and has cast marking "DUCTILE".
7. Assemble **new unbreakable rod coupling** (62-29-40) to one end of the new extension rod (62-30-15) by inserting a new coupling pin (62-29-31) with clip pin and assemble other end of new rod coupling to existing lower rod (62-30-12) using a new coupling pin (62-29-31) with clip pin.
8. Place **new unbreakable flange** (62-29-13) over lower barrel (62-19-SR) with recessed beveled portion facing up. Place new snap ring (62-29-14) in lower barrel groove.
9. Remove old gasket and place new barrel gasket (62-38-1) on lower barrel.
10. Place new snap ring (62-29-14) in either groove of new extension barrel (62-19X-SR) and place end of extension barrel with snap ring on lower barrel making sure gasket and pipe inside diameters are aligned.
11. Place other **new unbreakable flange** (62-29-13) over extension barrel (62-19X-SR) with recessed beveled portion facing down.
12. Assemble new barrel bolts and nuts (62-39-9). Torque in an alternating pattern to 80 ft.-lbs.
13. Place **existing breakable flange** (62-29-15) from Step 6 over extension barrel (62-19X-SR) with recessed beveled portion facing up. Place existing snap ring (62-29-14) in top extension barrel groove.
14. Place other new barrel gasket (62-38-1) and upper barrel assembly on the extension barrel by inserting new extension rod into the existing breakable rod coupling (62-29-30). **Use proper lifting techniques to avoid injury.**
15. Block the upper assembly as in Step 4 and insert a new coupling pin (62-29-31) with clip pin in the **existing breakable rod coupling** (62-29-30).
16. Lower upper barrel assembly to the extension barrel by turning operating nut in the closing direction making sure gasket remains centered and assemble **breakable flange** by using existing barrel bolts and nuts (62-39-9). Torque in an alternating pattern to 55-60 ft.-lbs.
17. Safely pressure test hydrant for joint tightness.

5-1/4" AMERICAN-DARLING® B-62-B-5 SPECIFICATIONS

Fire hydrants shall meet or exceed ANSI/AWWA C502, latest revision. Rated working pressure shall be 200 psig, test pressure shall be 400 psig and hydrants shall include the following specific design criteria:

- The main valve closure shall be of the compression type.
- Traffic feature must be designed for easy 360 rotation of nozzle section during field installation.
- The main valve opening shall not be less than 5-1/4 in. and be designed so that removal of all working parts can be accomplished without excavating.
- The hydrant valve shall be constructed of EPDM rubber and have a vertical taper of 20° or less.
- The bronze seat shall be threaded into an all bronze drain ring.
- The draining system of the hydrant shall be bronze and positively activated by the main operating rod. Hydrant drains shall close completely after no more than three turns of the operating nut. There shall be a minimum of two internal ports and four outlets to the exterior of the hydrant. Drain shutoff to be direct compression closure. Sliding drains are not permitted.
- Hydrant barrels shall be made of ductile iron. Nozzles shall be retained by collars. Threaded-in nozzles and nozzles using set screws, are not allowed.
- Hydrant upper barrel shall be factory coated with Electrodeposition (E-coat) epoxy primer and catalyzed two part polyurethane top coating. Base shall be coated with fusion bonded epoxy. All bolting below grade shall be 304 stainless steel.
- Friction loss not to exceed 3.0 psig at 1000 gpm through 4-1/2 in. pumper nozzle.

Hydrants shall be equal to the **5-1/4" American-Darling B-62-B-5** by AMERICAN Flow Control fire hydrant.

AMERICAN Flow Control

SECTION 2

FIRE HYDRANTS (WATEROUS COMPANY)

4-3/4" Waterous Trend	2A-1 through 2A-33
5-1/4" Waterous Pacer®	2B-1 through 2B-41

AMERICAN

FLOW CONTROL

THE RIGHT WAY

INDEX

4-3/4" WATEROUS TREND FIRE HYDRANT

Page

INTRODUCTION AND HISTORY 2A-2

ORDERING

Dimensions:

Overall Hydrant 2A-3

Optional Bottoms (Bases) 2A-4

Operating Nut Sizes 2A-5

Weights 2A-6

Friction Loss 2A-7

Submittal Sheet 2A-8

INSTALLATION AND TESTING

Installation 2A-9, 2A-10

Testing 2A-11, 2A-12

OPERATION AND MAINTENANCE

Operation 2A-12

Maintenance 2A-13

Troubleshooting Guide 2A-14

REPAIRS

Identifying Trend Variations 2A-15

Ordering Repair Parts 2A-15

Parts List:

250 PSIG Rated Ductile Iron Trend (WB77-1) 2A-16, 2A-17

200 PSIG Rated Gray Iron Trend (WB77) 2A-18, 2A-19

Repair Instructions ..... 2A-20 thru 2A-23

Traffic Damage Repair 2A-24, 2A-25

Nozzle Replacement 2A-26

Mechanically Attached Nozzles 2A-27, 2A-28

EXTENDING

Extension Instructions ..... 2A-29 thru 2A-32

SPECIFICATIONS 2A-33

4-3/4" WATEROUS TREND FIRE HYDRANT

View Video

AMERICAN Flow Control's **4-3/4" Waterous Trend** Fire Hydrant incorporates over 100 years of experience designing and manufacturing quality products for the water works industry. Introduced in 1977, the **4-3/4" Waterous Trend** hydrant's stylish and distinctive design provides real solutions to today's water system demands. The **4-3/4" Waterous Trend** hydrant is rated for 250 PSIG working pressure and meets or exceeds all of the requirements of ANSI/AWWA C502. Ductile iron construction throughout assures strength and durability. With many cities experiencing increased pressure to stretch their dollars, it is important to note that just one person can easily perform maintenance on the **4-3/4" Waterous Trend** hydrant.
The removal of four bolts and nuts allows access to all of the working parts.

The **4-3/4" Waterous Trend** hydrant has all the features you expect from a high quality fire hydrant. The epoxy primer and polyurethane top coat system on external surfaces of the upper barrel provide a durable, high-gloss finish that will continue to look good for years without repainting. The all bronze valve seat and bronze seat insert help assure that the **4-3/4" Waterous Trend** hydrant remains easy to repair.

In 2006, the **4-3/4" Waterous Trend** hydrant adopted the basic design of the 5-1/4" Waterous Pacer Fire hydrant. This hydrant has been manufactured for almost forty years while continuing to maintain parts interchangeability. This allows you to truly standardize on a fire hydrant.

4-3/4" WATEROUS TREND - DIMENSIONS

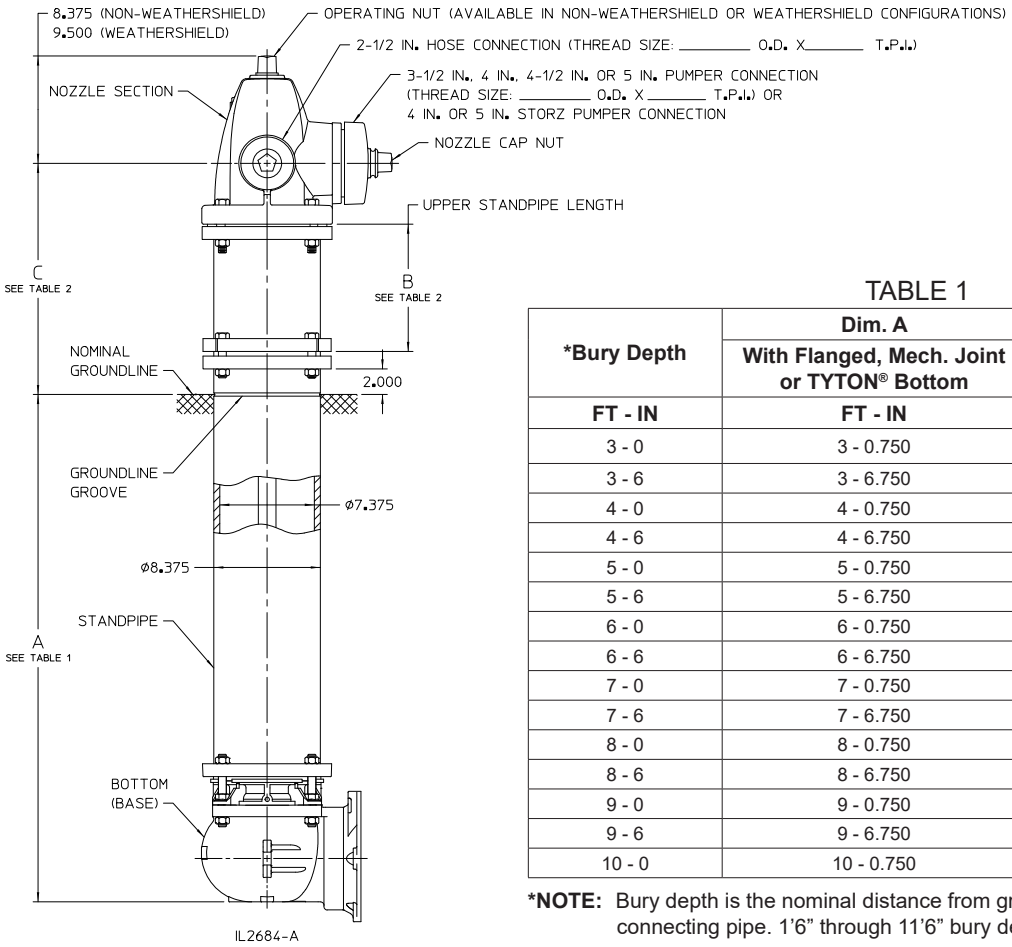

TABLE 1

*Bury Depth	Dim. A With Flanged, Mech. Joint or TYTON® Bottom	Rod Length Traffic Model (Lower Rod Length)
FT - IN	FT - IN	FT - IN
3 - 0	3 - 0.750	2 - 9.312
3 - 6	3 - 6.750	3 - 3.312
4 - 0	4 - 0.750	3 - 9.312
4 - 6	4 - 6.750	4 - 3.312
5 - 0	5 - 0.750	4 - 9.312
5 - 6	5 - 6.750	5 - 3.312
6 - 0	6 - 0.750	5 - 9.312
6 - 6	6 - 6.750	6 - 3.312
7 - 0	7 - 0.750	6 - 9.312
7 - 6	7 - 6.750	7 - 3.312
8 - 0	8 - 0.750	7 - 9.312
8 - 6	8 - 6.750	8 - 3.312
9 - 0	9 - 0.750	8 - 9.312
9 - 6	9 - 6.750	9 - 3.312
10 - 0	10 - 0.750	9 - 3.312

***NOTE:** Bury depth is the nominal distance from groundline to bottom of connecting pipe. 1'6" through 11'6" bury depths are available.

TABLE 2

DIM. B Upper Standpipe Length	DIM. C Nozzle Elevation Above Groundline
10 IN.	18 IN.
16 IN.	24 IN.
22 IN.	30 IN.
28 IN.	36 IN.
34 IN.	42 IN.

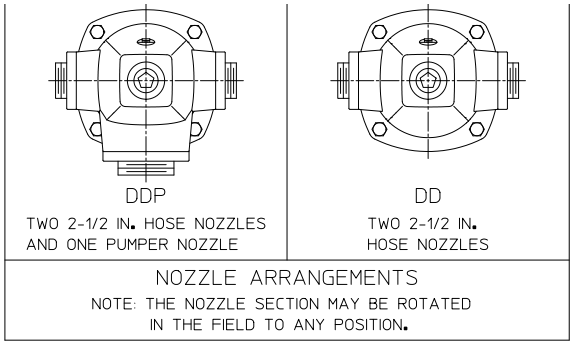

NOTES:
1. 250 PSIG rated working pressure
2. Meets or exceeds requirements of AWWA C502, latest revision.
3. Certified to NSF/ANSI Standard 61 and NSF/ANSI 372.
4. TYTON® is a registered trademark of United States Pipe and Foundry Co., LLC.
5. ALPHA™ is a trademark of Romac Industries, Inc. (U.S. Patent 8,894,100)

4-3/4" WATEROUS TREND - DIMENSIONS, OPTIONAL BOTTOMS (BASES)

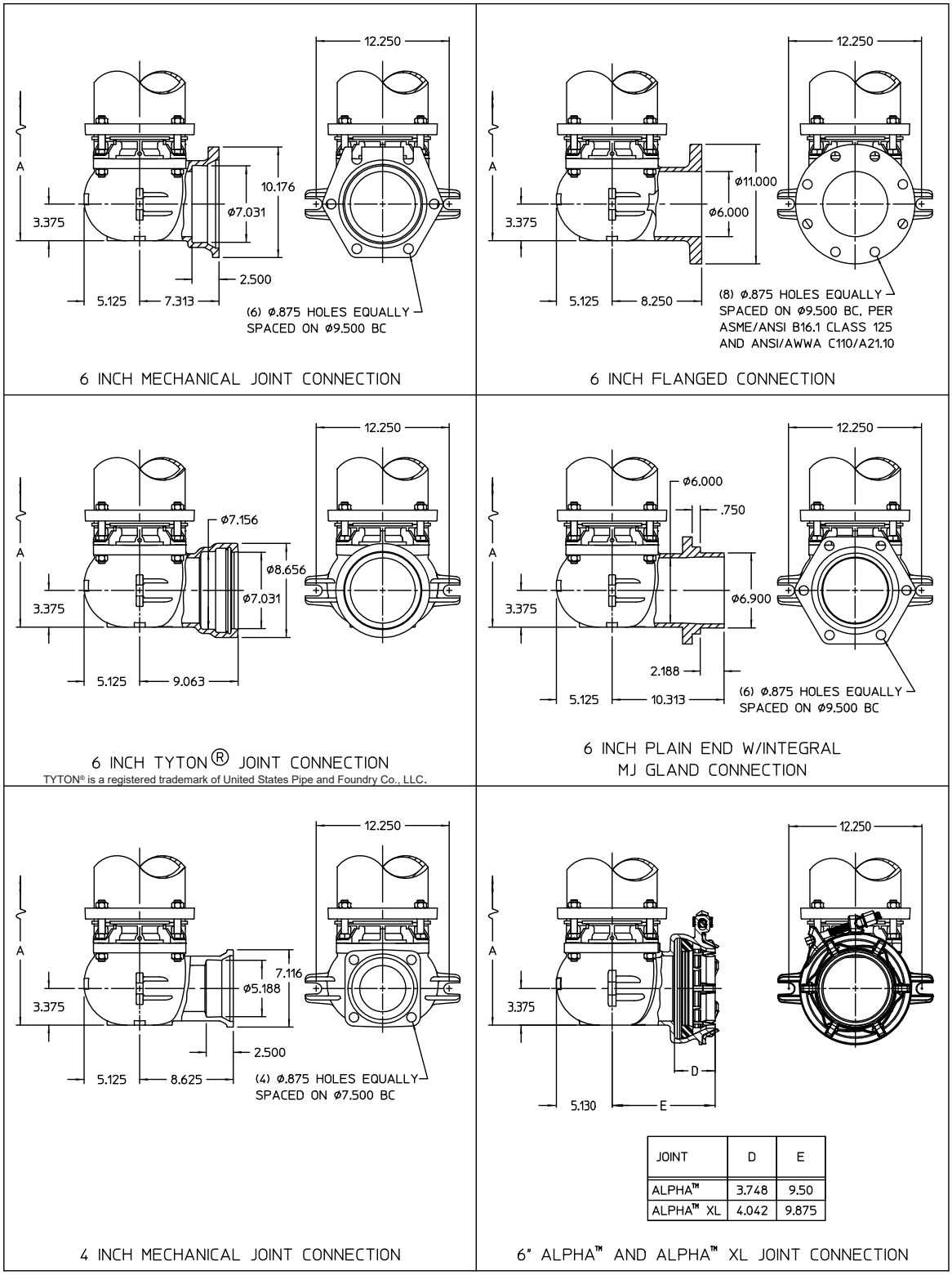

JOINT	D	E
ALPHA™	3.748	9.50
ALPHA™ XL	4.042	9.875

IL2684-1

ALPHA™ is a trademark of Romac Industries, Inc. (U.S. Patent 8,894,100)

NOTE: See Table 1 on Page 2A-3 for Dimension A.

4-3/4" WATEROUS TREND - OPERATING NUT SIZES

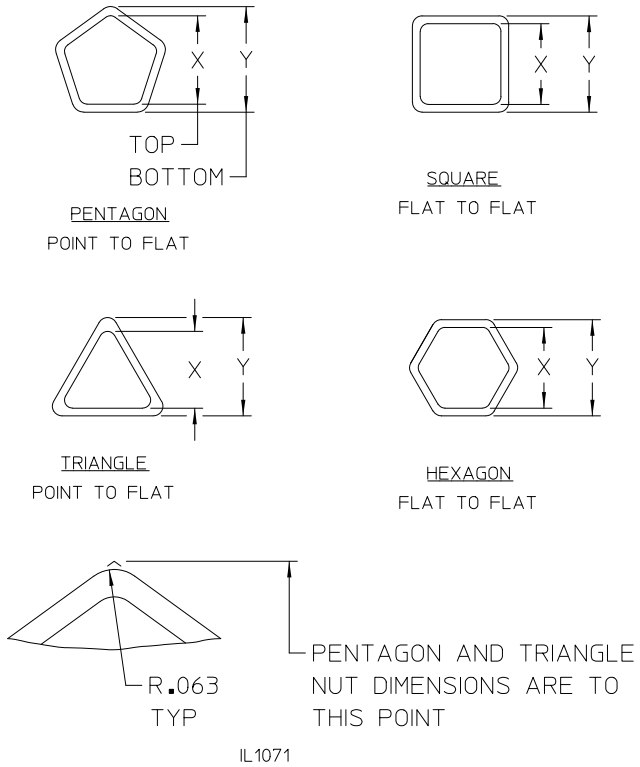

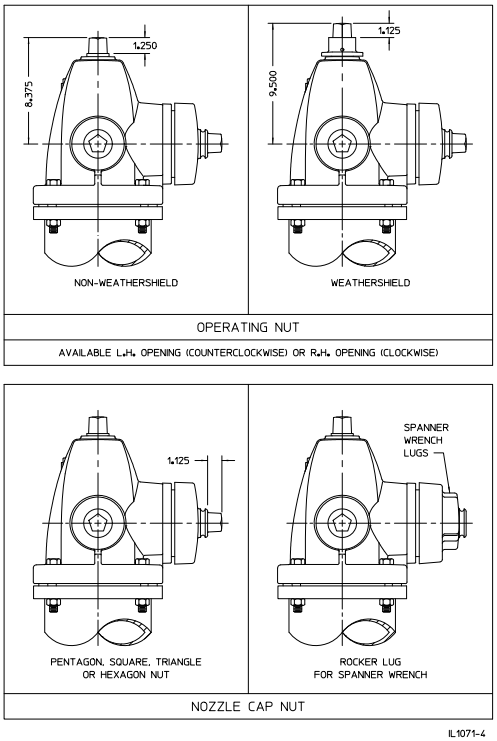

Nut Shape	Waterous Nut No.	Nominal Nut Size	X (Top)	Y (Bottom)
Pentagon	1	15/16	.866 / .835	.962 / .931
	2	1-1/8	1.059 / 1.028	1.155 / 1.124
	3	1-7/32	1.155 / 1.124	1.251 / 1.220
	3A	1-9/32	1.204 / 1.171	1.299 / 1.268
	4	1-5/16	1.251 / 1.220	1.348 / 1.317
	4A	1-3/8	1.309 / 1.278	1.406 / 1.375
	5	1-1/2	1.443 / 1.412	1.540 / 1.509
Square	6	7/8	.750 / .719	.875 / .844
	7	1	.875 / .844	1.000 / .969
Triangle	8	1-1/2	1/520 / 1.480	1.582 / 1.542
Pentagon	9	1-19/32	1.540 / 1.509	1.637 / 1.606
	*10	1-11/16	1.637 / 1.606	1.732 / 1.701
	*11	1-25/32	1.732 / 1.701	1.827 / 1.796
	*12	1-7/8	1.827 / 1.796	1.923 / 1.892
Square	13	1-1/8	1.000 / .969	1.125 / 1.094
	14	1-1/4	1.187 / 1.156	1.250 / 1.219
	*15	2	1.875 / 1.844	2.000 / 1.969
Hexagon	17	1-5/16	1.320 / 1.280	1.395 / 1.355
	17A	1-1/4	1.190	1.280
Square	19	15/16	.812 / .781	.937 / .906
Triangle	20	1-3/8	1.375 / 1.344	1.437 / 1.406
Square	*21	1-3/8	1.312 / 1.281	1.375 / 1.344
Hexagon	22	1-1/2	1.437 / 1.406	1.531 / 1.500
	22A	1-7/16	1.406 / 1.375	1.500 / 1.469
Square	*23	1-3/4	1.718 / 1.687	1.781 / 1.750
Rocker Lug	41	Rocker lug for spanner wrench (caps only)		

*NOTE: Operating nuts in these sizes are available only as weathershield type

4-3/4” WATEROUS TREND - WEIGHTS
With 6” Mechanical Joint Bottom (Less Accessories)

BURY DEPTH	WEIGHT
	TRAFFIC MODEL WB77-1
FT - IN.	DDP
3-0	357
3-6	377
4-0	398
4-6	418
5-0	439
5-6	458
6-0	480
6-6	500
7-0	521
7-6	541
8-0	562
8-6	582
9-0	603
9-6	623
10-0	644

NOTES:

1. Deduct 11 lbs for DD (2 hose)
2. 16 in. Breakoff Section - Use weight for 6 in. longer hydrant
3. 22 in. Breakoff Section - Use weight for 12 in. longer hydrant
4. Add 11 lbs for 4 in. Mechanical Joint accessories
5. Add 17 lbs for 6 in. Mechanical Joint accessories

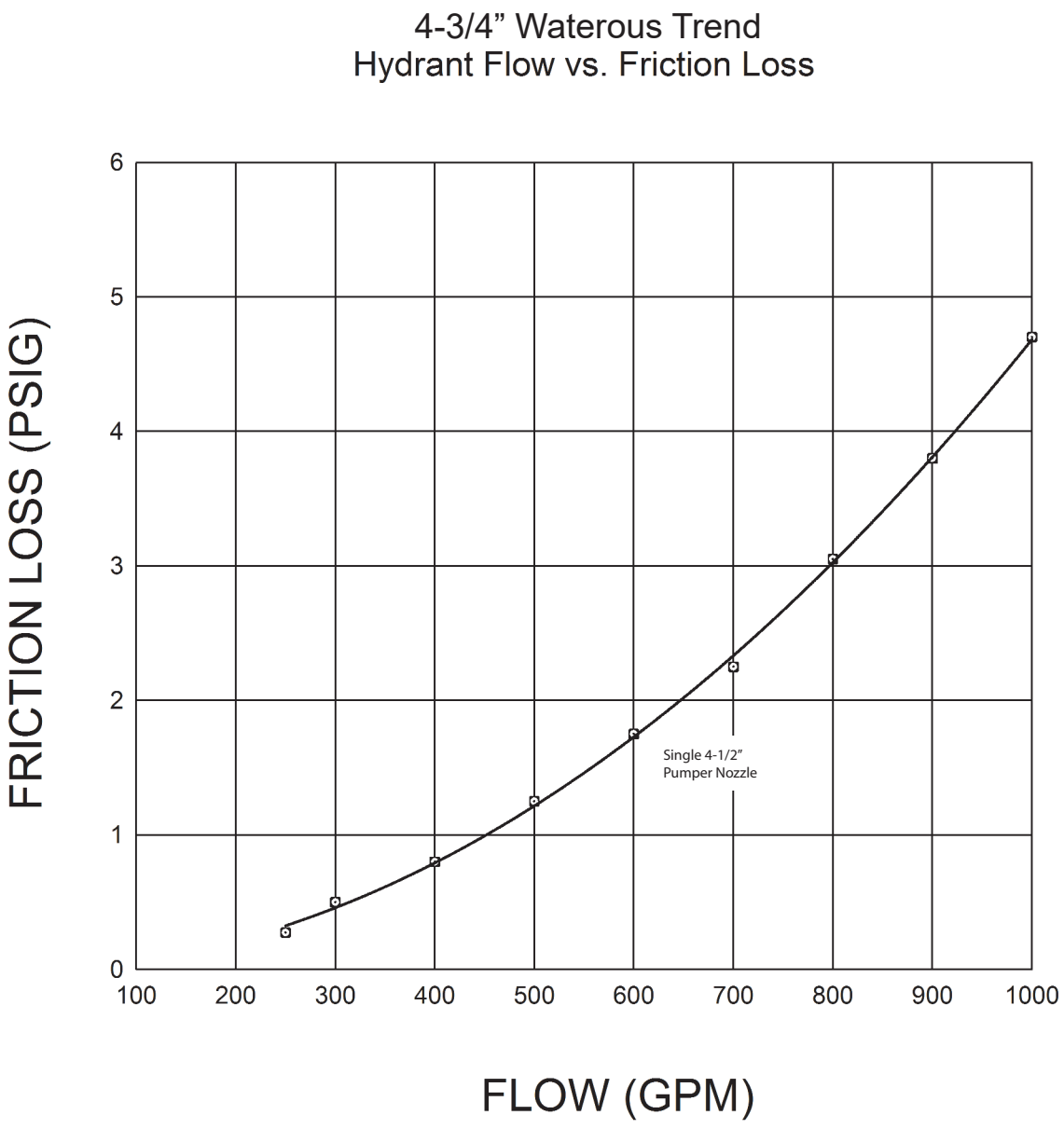
4-3/4" Waterous Trend
Hydrant Flow vs. Friction Loss
FRICTION LOSS (PSIG)
0
1
2
3
4
5
6
100
200
300
400
500
600
700
800
900
1000
Single 4-1/2"
Pumper Nozzle
FLOW (GPM)

IL1072

AMERICAN Flow Control®
4-3/4" WATEROUS TREND FIRE HYDRANT
SUBMITTAL SHEET

City Specfication:			**Quantity:**	
Type: ☐ Traffic (Model WB77-1) ☐ (Non-Traffic not available)				
Direction to Open: ☐ Left (C.C.W.) ☐ Right (C.W.)				
Operating Nuts	**Operating Nut**		**Nozzle Cap Nuts**	
	Non-Weathershield Weathershield		☐ Rocker Lug for Spanner Wrench or ☐ Same as Operating Nut	
	Nominal Size:	Shape:	Nominal Size:	Shape:
	Waterous No. (If Known)		Waterous No. (If Known)	
Nozzles	**Nozzle Configuration (Check One)**	**Pumper Nozzle**	**Hose or IHG Valve Nozzle**	
	☐ DDP (Two Hose, One Pumper ☐ DD (Two Hose)	Storz: ☐ 4 in. ☐ 5 in. Nat'l Std. ☐ Yes ☐ No	Nat'l Std: ☐ Yes ☐ No	
		Size: Pitch Dia: O.D. x T.P.I.	Size: Pitch Dia: O.D. x T.P.I.	
		Waterous Template (If Known):	Waterous Template (If Known):	
Nozzle Cap Chains: ☐ Yes ☐ No			**Bury Depth:** (Depth of Trench)	
Upper Standpipe Length: ☐ 10" ☐ 16" ☐ 22" ☐ 28" ☐ 34"				
Bottom (Base) Connection: (Check One) ☐ 6" Flanged ☐ 6" MJ ☐ 6" TYTON® ☐ 6" Plain End with Integral MJ Gland ☐ 4" MJ ☐ 6" ALPHA™ ☐ 6" ALPHA™ XL				
Paint Color:				
Other Requirements: (List)				

Notes:
1. Meets or exceeds requirements of AWWA C502, latest revision.
2. 250 PSIG AWWA rated working pressure.
3. Certified to NSF/ANSI Standard 61 and NSF/ANSI 372.
4. TYTON® is a registered trademark of United States Pipe and Foundry Co., LLC.
5. ALPHA™ is a trademark of Romac Industries, Inc. (U.S. Patent 8,894,100)

4-3/4" WATEROUS TREND - INSTALLATION

This instruction is issued as a recommendation to the customer for the proper use of the AMERICAN Flow Control manufactured fire hydrants. AMERICAN recommends you follow the general Inspection and Installation guidelines outlined in AWWA Manual *M17 for Installation, Field Testing, and Maintenance of Fire Hydrants* and/or as recommended below. **WARNING: Special care should be taken in the installation, inspection and repair of pressure containing devices such as valves and hydrants. FAILURE TO FOLLOW PROPER PRACTICE AND GUIDELINES CAN RESULT IN SERIOUS INJURY OR DEATH. High pressure and water hammer, due to rapid opening or closing of a hydrant or valve, can also cause major damage to the hydrant, valve, water main, fire hose, or other attached equipment.**

Receiving Inspection

On receipt, inspect for direction of opening, correct nozzle threads and operating nuts and shipping damage.

Report any problems to carrier, note on bill of lading and have the driver sign your copy.

Installation

1. When hydrants are received, they should be handled carefully to avoid breakage and damage to flanges. Keep hydrants closed until they are installed. Protect stored hydrants from the elements.
2. **Before installation of hydrant, clean piping, base and drain ring of hydrant of any rocks, sand and/or foreign material. Check for loose bolts at base, ground line and cover. Tighten if necessary.**
3. Hydrants shall be located as shown or as directed and in a manner to provide complete accessibility, and also in such a manner that the possibility of damage from vehicles or injury to pedestrians will be minimized. Locate hydrants as detailed in AWWA M17 and/or in accordance with applicable fire codes, the requirements of local fire authority, or the applicable municipal design standard.
4. All hydrants shall stand plumb and shall have their nozzles parallel with or at right angles to the curb, with the pumper nozzle facing the curb, except that hydrants having two hose nozzles 90° apart shall be set with each nozzle facing the curb at the angle of 45°. Hydrants shall be set to the established grade, with nozzles at least 18 inches above the ground, as shown or as directed by the engineer.
5. It is recommended practice to install an auxiliary or secondary gate valve in the lateral between the hydrant and the main to permit inspection and repair of the hydrant without shutting down mains. The use of AMERICAN Flow Control Series 2500 Resilient Wedge Gate Valves are recommended.
6. On traffic hydrants, surrounding soil must be adequately compacted around the standpipe to support the lower barrel against transferring the force of a vehicular impact to the base. If the soil is too sandy and will not support the loads, pour a concrete pad around the barrel at or near the ground line at least 6 inches thick and 36 inches in diameter for standpipe support.
7. Whenever a hydrant is set in soil that is pervious. drainage shall be provided at the base of the hydrant by placing coarse gravel or crushed stone mixed with coarse sand, from the bottom of the trench to at least 6 inches above the drain opening in the hydrant and to a distance of 1 foot around the elbow.
8. Whenever a hydrant is set in clay or other impervious soil, a drainage pit 2 feet in diameter and 3 feet deep shall be excavated below each hydrant and compactly filled with coarse gravel or crushed stone mixed with coarse sand under and around the elbow of the hydrant and to a level of 6 inches above the drain opening.
9. Where there is a high ground water level or other conditions that prevent the use of hydrants with drains, "non-draining" hydrants should be used. Hydrants of this type are provided with either a solid seat and/or plugged drains and are marked to pump after use. This is especially important to avoid damage to the hydrant in areas where freezing temperatures are likely. Non-draining hydrants should be checked upon installation and during semi-annual inspections to make sure the hydrant stays dry inside the lower and upper barrel.
10. Restrain hydrant movement with appropriate thrust blocking or restrained joint to prevent pipe and/or joint separation. If a concrete thrust block is installed, care should be taken to prevent blocking the hydrant drains if they are to remain operable.
11. When first installed, the hydrant should be operated from full closed to full open position and back to make sure no obstructions are present.
12. After the line, as well as the hydrant, have been hydrostatically tested, the hydrant should be flushed and checked for proper drainage, if applicable.

4-3/4" WATEROUS TREND - INSTALLATION

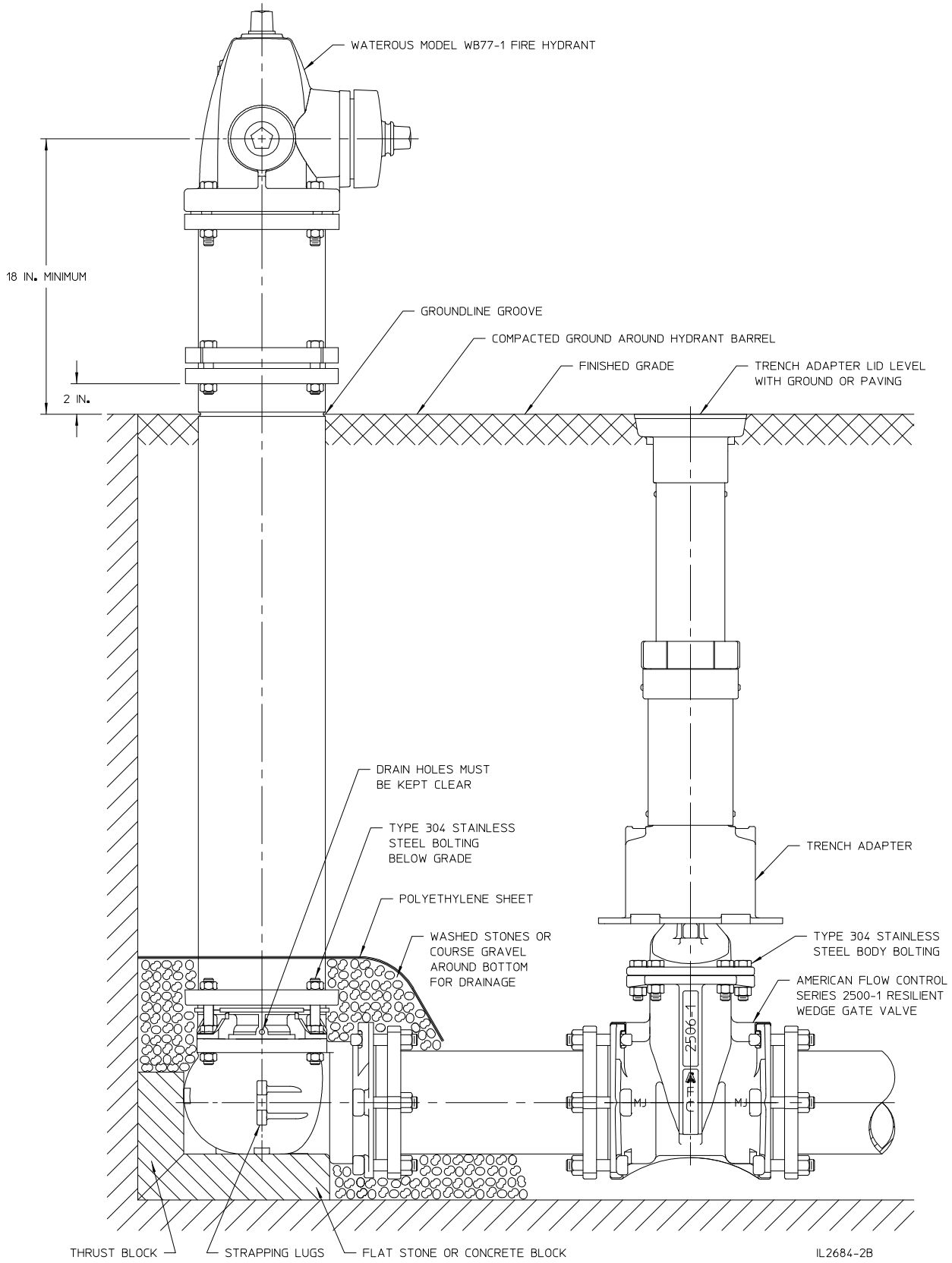

4-3/4" WATEROUS TREND TESTING

AMERICAN Flow Control recommends you follow the General Inspection and Installation Guidelines outlined in AWWA Manual M17 for Installation, Field Testing, and Maintenance of Fire Hydrants and/or as recommended below. ANSI/AWWA C502 permits dry barrel hydrants with unplugged drain outlets to have an allowable leakage of 5 fluid oz/min (0.25 mL/s) through the drain valve. Therefore, the hydrant should not be opened at the same time that the water main is tested. The auxiliary valve should be closed during water main tests (see ANSI/AWWA C600). If it is necessary to test the hydrant and water main at the same time, the installer may elect to temporarily plug the drain outlets by installing a non-draining seat. **WARNING: Special care should be taken in the installation, inspection and repair of pressure containing devices such as valves and hydrants. FAILURE TO FOLLOW PROPER PRACTICE AND GUIDELINES CAN RESULT IN SERIOUS INJURY OR DEATH. High pressure and water hammer, due to rapid opening or closing of a hydrant or valve, can also cause major damage to the hydrant, valve, water main, fire hose, or other attached equipment.** After the hydrant is installed and, when possible, before backfilling (and after pressure testing the water main), the hydrant should be tested as follows:

Pressure Test at Main Pressure

WARNING: FAILURE TO RELIEVE PRESSURE CAN RESULT IN THE CAP BLOWING OFF, CAUSING INJURY OR DEATH.

1. Remove an outlet nozzle cap and open the hydrant valve enough turns to close the drain. Allow the hydrant to fill until the water level reaches bottom of the outlet nozzle.
2. Replace the outlet-nozzle cap and leave it loose to permit all air to escape.
3. After all air has escaped, tighten the outlet-nozzle cap.
4. Open the hydrant completely. (Opening the hydrant fully before all the air has escaped will compress the air and cause a safety hazard.)
5. Check for leakage at all joints and outlet nozzles.
6. If leakage is noted, repair or replace the necessary components or the entire hydrant using the instructions found in this publication.
7. Repeat the test until results are satisfactory.

Pressure Test at Pressures Above Main Pressure

WARNING: FAILURE TO RELIEVE PRESSURE CAN RESULT IN THE CAP BLOWING OFF, CAUSING INJURY OR DEATH.

1. Connect a pressure test pump to one of the hydrant's outlet nozzles.
2. Open an outlet nozzle cap. Open the hydrant valve a few turns. Allow the hydrant to fill until the water level is at the bottom of the outlet nozzle.
3. After all the air has escaped, tighten the outlet nozzle cap.
4. Open the hydrant completely.
5. Close the auxiliary valve.
6. Safely pump up to the test pressure but do not exceed the rated working pressure of the hydrant or system components.
7. Check for leakage at all joints and outlet nozzles.
8. Safely repair or replace hydrant, if necessary, using the instructions found in this publication.
9. Repeat the test until results are satisfactory.
10. Close the hydrant and relieve pressure. Open the auxiliary valve.

4-3/4" WATEROUS TREND TESTING

Drainage Test for Dry Barrel Hydrants (Draining Type)

WARNING: FAILURE TO RELIEVE PRESSURE CAN RESULT IN THE CAP BLOWING OFF, CAUSING INJURY OR DEATH.

1. Following the pressure test, close the hydrant main valve.
2. Carefully remove one outlet nozzle cap and place the palm of one hand over the outlet nozzle opening.
3. Drainage should be sufficiently rapid to create a noticeable suction.
4. If the hydrant fails the drainage test, replace and tighten the nozzle cap, partially open the hydrant (1 or 2-turns) with the outlet nozzle caps on to create a pressure that will flush and clear the drain assembly. If this fails to restore proper drainage, then the drain assembly should be removed and inspected. If the drain assembly is clear, then the problem may be that the drain outlets are plugged from outside the hydrant. Repair will require digging down around the outside of the hydrant and clearing the drain outlets.

Placing a Hydrant Into Service

1. After testing and backfilling, the hydrant should be safely flushed and tested to be sure that it is bacteriologically safe before it is put into service.
2. Tighten the outlet nozzle caps so they will not be excessively tight, but tight enough to prevent their removal by hand.
3. Clean the hydrant exterior to remove dirt accumulated during installation. Touch up any areas where factory coating was damaged during handling or installation. Use an appropriate top coating or contact factory for touch-up coatings.

4-3/4" WATEROUS TREND OPERATION, INSPECTION, AND MAINTENANCE

Operation View Video

AMERICAN Flow Control recommends you follow the general Inspection and Installation guidelines outlined in AWWA Manual M17 for Installation, Field Testing, and Maintenance of Fire Hydrants and/or as recommended below. The thrust bearing hydrant requires a minimum of torque to operate. **WARNING: Special care should be taken in the installation, inspection and repair of pressure containing devices such as valves and hydrants. FAILURE TO FOLLOW PROPER PRACTICE AND GUIDELINES CAN RESULT IN SERIOUS INJURY OR DEATH. High pressure and water hammer, due to rapid opening or closing of a hydrant or valve, can also cause major damage to the hydrant, valve, water main, fire hose, or other attached equipment.** It is possible to damage the hydrant by forcing it beyond its limits of travel with excess torque; therefore:

1. Check direction of opening as marked on the nozzle section.
2. To open, turn the operating nut until the main valve is fully open and the travel stop nut limits further opening. **Do not force the hydrant in the opening direction beyond fully-open as indicated by sudden resistance to turning**. If water does not flow when the hydrant is open, it is probably due to a closed valve upstream from the hydrant. Always open the hydrant completely, never only partially. A hydrant that is partially open will allow pressurized flow through the drain valve, which may wash away the soil from the area surrounding the base, or the partially open main valve may trap small stones or other debris between the valve seal and seat.
3. To close, turn the operating nut until the valve stops the flow. **It is not necessary to close this style of hydrant with great force.** Once the flow has stopped, turn the operating nut in the opening direction about 1/4 turn to take the strain off the operating parts of the hydrant. If the hydrant does not shut off completely, do not attempt to force the hydrant to close. Debris and small stones may be trapped in the valve seat and may be preventing the hydrant from closing. Partially open and close the hydrant several times to help dislodge the debris. If this does not work, safely remove the hydrant operating rod assembly, remove the debris and repair as detailed in subsequent sections of this manual.
4. **WARNING: FAILURE TO RELIEVE PRESSURE CAN RESULT IN THE CAP BLOWING OFF, CAUSING INJURY OR DEATH.** Make sure the auxiliary gate valve in the lateral between the main and the hydrant is closed and that the hydrant is not charged with pressure when removing caps.

Inspection

1. It is recommended that hydrants be inspected twice per year to ensure their satisfactory operation. After each use (especially in cold weather) hydrants should be specifically inspected for drainage.
2. Routine inspection should cover the points outlined in AWWA Manual M17 and include (but not be limited to) the following points:
   a. External inspection of paint, caps, chains, etc.
   b. Checking traffic type hydrants for damage to the breakaway feature.
   c. Using a listening device to check the main valve for leakage.
   d. Statically testing the hydrant to look for leakage at gaskets, caps, O-rings and drains.
   e. Verifying the hydrant drains properly.
   f. Cycling the hydrant from full open to full close.
   g. Check for routine lubrication needs which includes but may not be limited to loss of lubricant, nozzle caps and operating mechanism.
3. At time of inspection, flush the hydrant to remove any foreign material from the hydrant and the lateral. If necessary, flush the drains by filling the hydrant and then cycling open the main valve two times to force water out of the drains under pressure. If the hydrant is non-draining type, pump water out after flushing.

MAINTENANCE View Video

AMERICAN Flow Control strongly recommends that you follow routine maintenance on fire hydrants as outlined in AWWA Manual *M17 for Installation, Field Testing, and Maintenance of Fire Hydrants.* The ease of operation and the frequency of repair depends on the condition of the water system and the maintenance given. Dirt, gravel and other foreign material in the hydrant may prevent it from closing or draining properly, which may result in damage to the hydrant main valve. Under most operating conditions, AMERICAN Flow Control recommends semi-annual lubrication and inspection of fire hydrants. Where grease is specified, use an AMERICAN Flow Control recommended food grade grease.

1. Twice per year, open the hydrant completely and flush for several minutes. Open and close valve to make sure it works properly, and check for leaks.
2. Remove a cap and verify that the hydrant is draining properly. After the main valve is closed, the water in the hydrant should drain rapidly. If it does not, the drain ports may be clogged. To clear drain ports, install nozzle cap, and tighten until water tight, then open hydrant two or three turns for several minutes. This will leave drain port partially open and permit water pressure to wash out the obstruction. If this method is unsuccessful, remove the operating rod assembly and clean the drain mechanism. If neither of above methods permits water to drain, it indicates that the drainage area around the hydrant base should be rebuilt.
3. **Oil Reservoir Hydrants:**

   Remove oil level plug and check oil level. The oil level should be to the level of the plug. If it is necessary to add oil, remove the oil level plug on the back of the nozzle section and add oil.
4. **Non-Oil Reservoir Hydrants:**

   Remove screw from operating nut, and add approximately one tablespoon of oil through opening. Replace screw.
5. Remove all nozzle caps, clean rust or corrosion from threads of nozzles and caps, and replace cap gaskets if necessary. Apply a light coat of grease to nozzle threads before replacing cap.

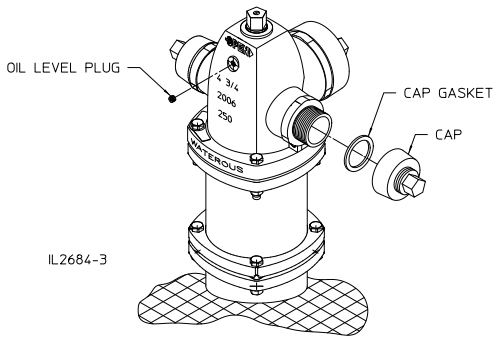

MODEL WB77-1

Note: Where oil or grease is specified, use an AMERICAN Flow Control recommended food grade lubricant.

4-3/4" WATEROUS TREND - TROUBLESHOOTING GUIDE

WARNING: Special care should be taken in the installation, inspection and repair of pressure containing devices such as valves and hydrants. FAILURE TO FOLLOW PROPER PRACTICE AND GUIDELINES CAN RESULT IN SERIOUS INJURY OR DEATH. High pressure and water hammer, due to rapid opening or closing of a hydrant or valve, can also cause major damage to the hydrant, valve, water main, fire hose, or other attached equipment.

Problem	Solution
1. Operating nut turns freely but hydrant does not open.	1. Inspect rod coupling for breakage and ensure rod pin is properly installed.
2. Hydrant will not shut off or ground around hydrant is highly saturated.	2. Close hydrant and remove nozzle cap. Check with listening device to determine if water is passing by main valve. If it is determined that the main valve is leaking, try the following: a. Flush hydrant in fully open position (watch to see if rocks or other foreign objects flush out of the barrel). b. After flushing for several minutes, shut off the hydrant. Watch for several minutes to see if flow stops. Place hand over open hose nozzle; suction should be felt, indicating hydrant is no longer leaking and drains are working properly. c. If flushing does not solve the problem, it would indicate that something is trapped or has cut the main valve rubber. Follow the seat removing instructions to replace the valve. Check threads on bronze seat to be sure that is not damaged. If threads appear worn or bent, replace the bronze seat. d. If replacing the valve does not stop the leakage, bolting at the hydrant shoe may be loose or the base gasket is damaged. The hydrant must be excavated to make the repair.
3. External leakage is noticed around the operating nut.	3. This indicates that O-rings are cut or missing. Replace o-rings as referenced in the disassembly and repair instructions.
4. Operating nut is extremely hard to turn.	4. Try to turn the operating nut. If the nut turns, carefully turn the nut back from a tight closed position until it turns freely. If it is necessary to add lubricant, for hydrants with an oil reservoir, remove the oil level plug on the back of the nozzle section and add oil. Fill oil to the level of the plug, if necessary. For hydrants with no oil reservoir, remove the flat head screw on the operating nut and add mineral oil or similar lubricant. ALWAYS FULLY OPEN AND CLOSE THE HYDRANT AFTER LUBRICATING. Replace the oil level plug or the flat head screw taking care to replace the thread sealant. The hydrant should cycle freely. If this does not solve the problem, remove the operating nut. Inspect the threads of the operating nut and upper rod. Inspect the thrust washer to ensure it is lubricated and is undamaged. Replace and/or lubricate the thrust washer if neces-sary. If this does not solve the problem, remove the hydrant seat and flush thoroughly. Note: **Where grease is specified, use an AMERICAN Flow Control recommended food grade grease**
5. Water is dripping around nozzles.	5. Close hydrant and remove nozzle cap. Replace cap gasket. Check the nozzle to be sure it is properly installed. Earlier model hydrants used caulked nozzles. Nozzle may require re-cauking or replacement of barrel. If nozzle has an O-ring behind the nozzle, it may need replacing.
6. Hydrant will not drain properly.	6. Check to be sure the water table has not risen too high to allow for drainage. Flush hydrant to be sure drains are clear. Open hydrant slowly several turns while leaving caps firmly in place to ensure hydrant drains are clear. Close hydrant and repeat this procedure. Do this slowly several times. If this does not solve the problem, remove the hydrant seat assembly and check the rubber drain facings. If no problems are found, excavate the hydrant to see if concrete or other materials have blocked the drain outlets.

4-3/4" WATEROUS TREND – IDENTIFYING VARIATIONS / REPAIR KITS

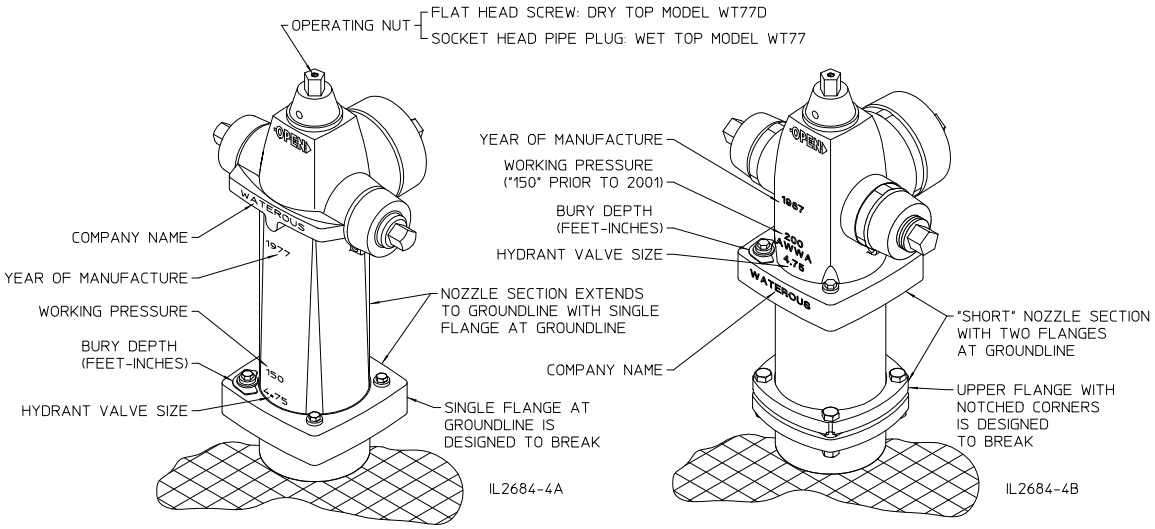

DRY TOP MODEL WT77D: BUILT FROM 1977 TO 1996
WET TOP MODEL WT77: BUILT FROM 1977 TO 1987

(SEE NOTE 6)

MODEL WB77: BUILT FROM 1987 TO 2006

(SEE NOTE 6)

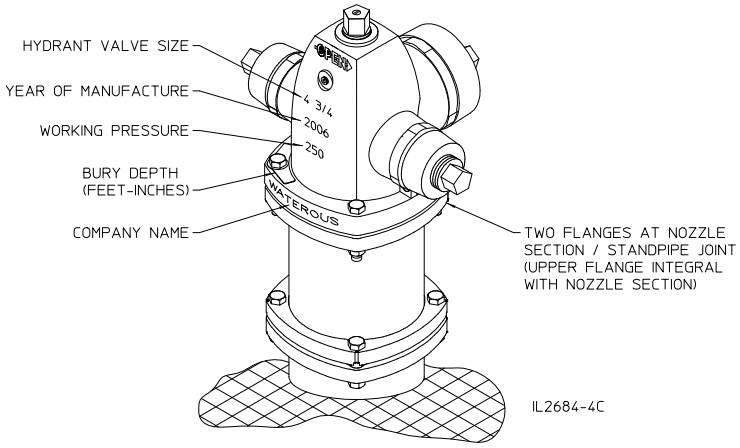

MODEL WB77-1: BUILT FROM 2006 TO PRESENT

4-3/4" TREND HYDRANT
AVAILABLE IN TRAFFIC CONFIGURATION ONLY

Repair Parts

To assure prompt delivery and shipment of the correct parts, furnish the following information with each repair parts order.

1. Date of manufacture or purchase of hydrant.
2. Depth of bury.
   NOTE: Depth is shown on bury depth plate.
3. Hydrant opening direction.
4. Check original order to see if any special parts are required. For replacement nozzles, caps, and operating nuts, be sure to furnish thread data and size and shape of nut.
5. For each part ordered, give reference number and description as found on the following parts lists.

NOTE: Kits are available for making most repairs or extending the hydrant.

6. For more information on repairs to a Trend Model WB77 built prior to mid 2006, see the following instructions:
   - 351, Installation, Operation, Maintenance and Overhaul Instructions.
   - H-358, Trend Traffic Damage Repair
   - H-404, Installation Instructions for Standpipe and Rod Extension Kit K479 in Trend Fire Hydrants.

Parts List - 250 PSIG Rated Ductile Iron 4-3/4" Waterous Trend

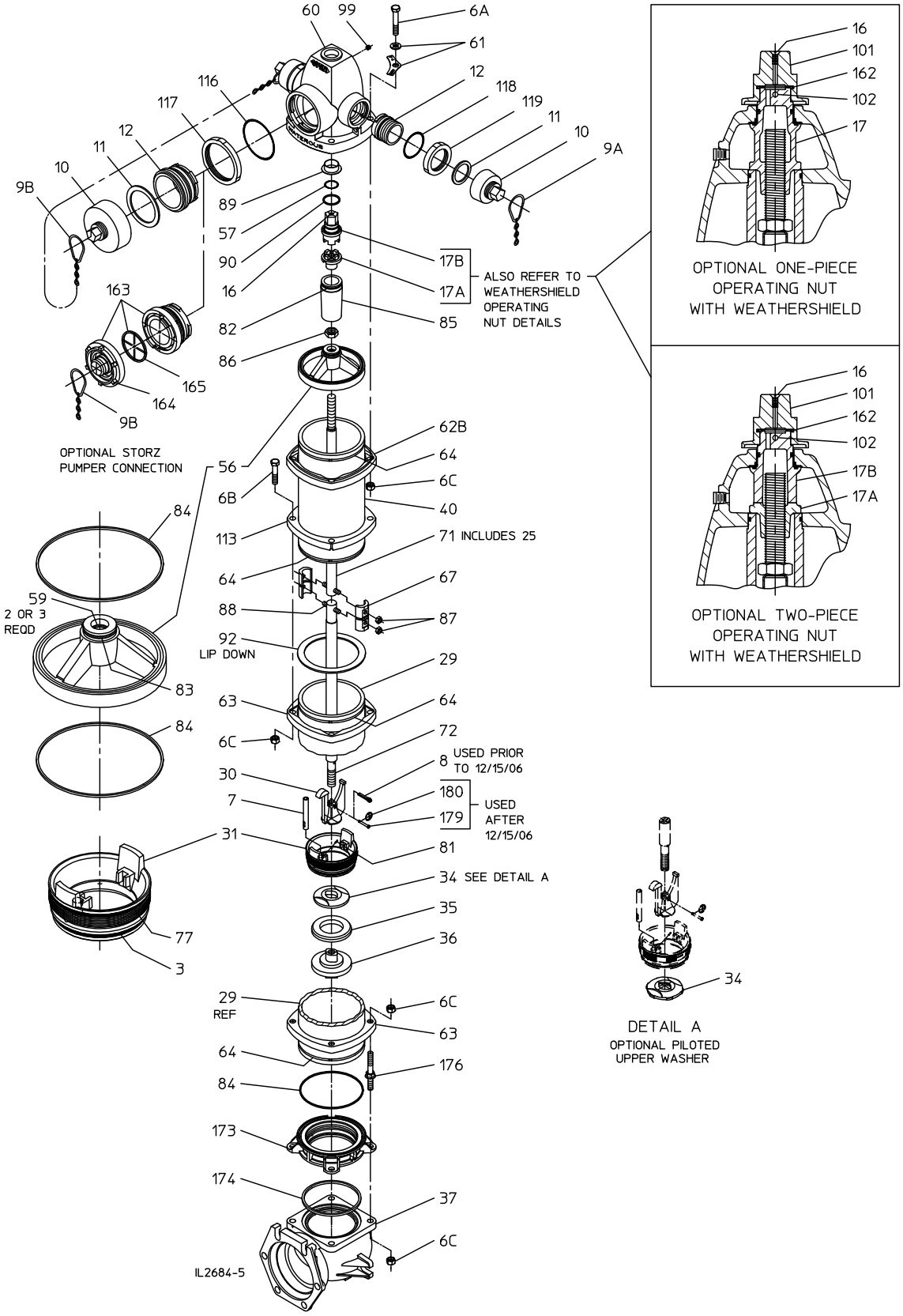

TREND MODEL WB77-1
BUILT FROM 2006 TO PRESENT

Parts List - 250 PSIG Rated Ductile Iron 4-3/4" Waterous Trend

Traffic Model WB77-1

REF NO.	DESCRIPTION	MATERIAL
3	O-ring (Lower valve seat), 5-5/8 x 6-3/64	Buna-N
6A	Hex hd bolt, 5/8-11 x 3-3/4 in.	Plated steel
6B	Hex hd bolt, 5/8-11 x 3 in.	Plated steel
6C	Hex nut, 5/8-11 (Above grade)	Plated steel
6C	Hex nut, 5/8-11 (Below grade)	Stainless steel
7	Drain plunger	Red brass
8	Cotter pin, 1/4 x 1-1/2 in.	Stainless steel
9A, 9B	Nozzle cap chain, single or double	Plated steel
10	Nozzle cap, hose or pumper	Ductile iron
11	Cap gasket, hose or pumper	Neoprene
12	Nozzle, hose or pumper	Brass
16	Flat hd screw, 1/4-20 x 1/2 in.	Stainless steel
17	Operating nut (one-piece)	Bronze
17A	Lower operating nut	Bronze
17B	Upper operating nut	Ductile iron**
25	Rod bushing	Red brass
29	Lower standpipe	Centrifugally cast ductile iron pipe*
30	Crossarm	Bronze
31	Valve seat	Bronze
34	Upper valve washer	Gray Iron
35	Main valve rubber	Urethane
36	Lower valve washer	Gray iron
37	Hydrant bottom	Ductile iron
40	Upper standpipe	Centrifugally cast ductile iron pipe*
56	Support wheel	Ductile iron
57	O-ring (Operating nut), 1-1/2 x 1-3/4	Buna-N
59	O-ring (Support wheel), 1-1/8 x 1-3/8	Buna-N
60	Nozzle section	Ductile iron
61	Bury depth plate	Aluminum
61	Bury depth plate washer	Plated steel
62B	Upper standpipe flange	Ductile iron
63	Standpipe flange	Ductile iron
64	Flange lock ring	Stainless steel
67	Coupling sleeve (two-halves)	Gray iron
71	Upper rod	Steel rod
72	Lower rod	Steel rod
77	O-ring (Upper valve seat), 5-7/8 x 6-1/4	Buna-N
81	Groove pin, 3/32 x 7/16 in.	Beryllium copper
82	O-ring (Upper tube seal), 2-3/8 x 2-5/8	Buna-N
83	O-ring (Lower tube seal), 1-7/8 x 2-1/8	Buna-N
84	Support wheel / Lower standpipe gasket	Buna-N
85	Support tube	Ductile iron
86	Stop nut, 1"- 8	Plated steel
87	Coupling nut, 1/2-20	Brass
88	Coupling stud, 1/2-20 x 2-9/16 in.	Stainless steel
89	Nozzle section bushing	Brass
90	Thrust ring	Polymer bearing
92	Upper standpipe gasket	Neoprene
99	Pipe plug, 1/4 NPT	Brass
101	Weathershield nut	Ductile iron
102	Spirol pin, hvy, 1/4 x 2-1/4 in.	Stainless steel
113	Breakable flange	Ductile iron
116	O-ring (Pumper nozzle), 5-1/4 x 5-3/4	Buna-N
117	Pumper nozzle retainer	Ductile iron
118	O-ring (Hose nozzle), 3-1/4 x 3-5/8	Buna-N
119	Hoze nozzle retainer	Ductile iron
162	Weathershield nut gasket	Nitrile
163	Nozzle, pumper, Storz (with cap and gasket)	Bronze and Aluminum
164	Nozzle cap, pumper, Storz	Aluminum
165	Cap gasket, pumper, Storz	Buna-N
173	Valve seat insert	Bronze
174	Valve seat insert gasket	Nitrile
176	Stud, 5/8-11 x 5.650 in.	Stainless steel
179	Clevis pin, 1/4 x 1-11/16 in.	Stainless steel
180	Kickout ring	Stainless steel

*AWWA Standard C151 (ANSI A21.51)
**Bronze is optional on some nut sizes

Parts List - 200 PSIG Rated Gray Iron 4-3/4" Waterous Trend

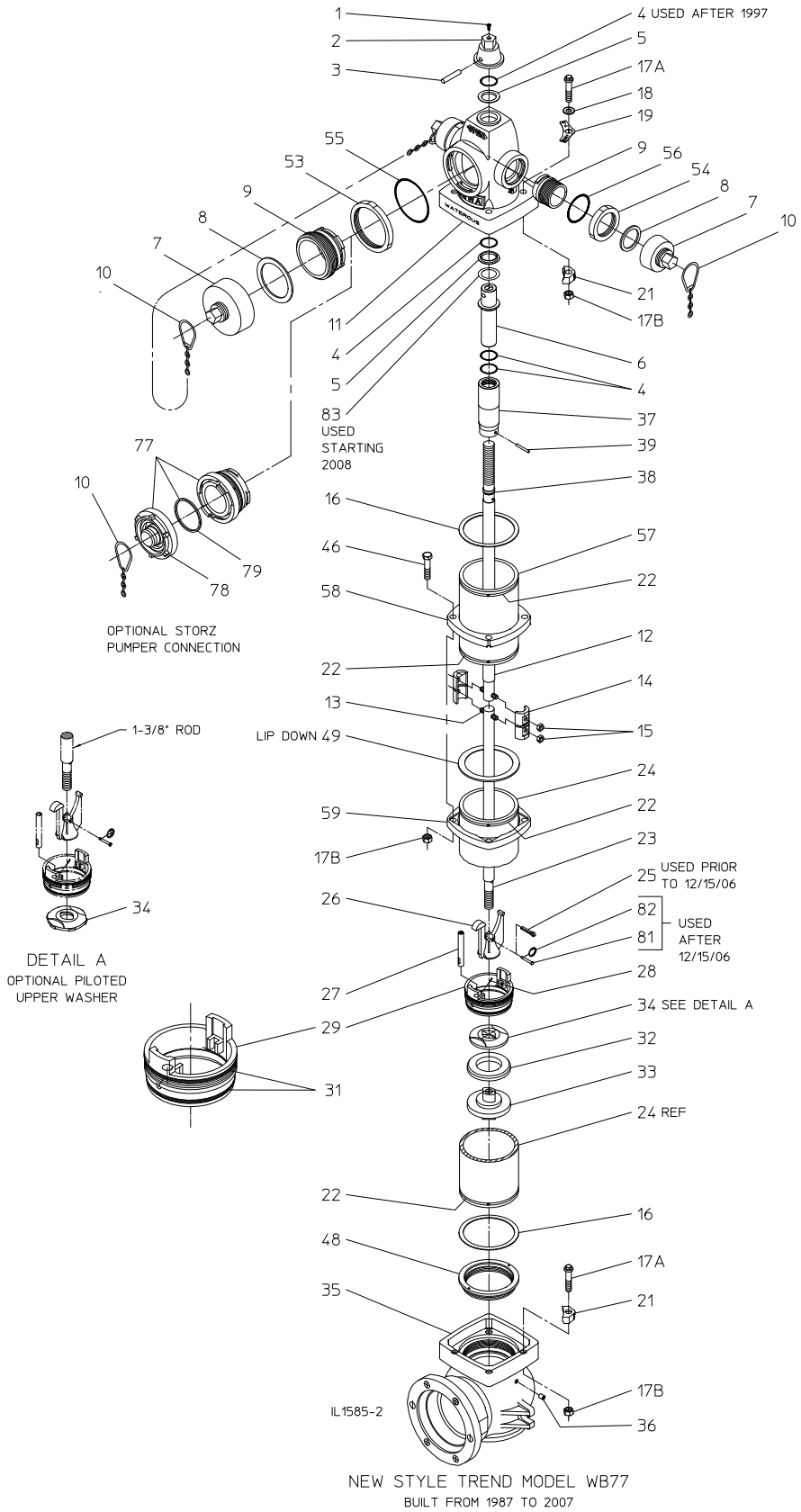

Parts List - 200 PSIG Rated Gray Iron 4-3/4" Waterous Trend

Traffic Model WB77

REF NO.	DESCRIPTION	MATERIAL
*1	Flat hd screw, 1/4-20 x 1/2 in.	Stainless steel
2	Weathershield nut	Gray iron
3	Spirol pin, hvy, 1/2 x 2-3/4 in.	Stainless steel
4	O-ring, 1-3/4 x 2	Buna-N
5	Thrust bushing	Sintered bronze
6	Operating nut	Brass
*7	Nozzle cap, hose or pumper	Ductile iron
*8	Cap gasket, hose or pumper	Neoprene
*9	Nozzle, hose or pumper	Bronze
*10	Nozzle cap chain, single or double	Plated steel
11	Nozzle section	Gray iron
12	Upper rod	Steel rod
*13	Coupling stud, 1/2-20 x 2-9/16 in.	Stainless steel
*14	Coupling sleeve (two halves)	Gray iron
*15	Coupling nut, 1/2-20	Brass
16	Standpipe gasket	Neoprene
*17A	Hex hd bolt, 5/8-11 x 3 in.	Plated steel
*17B	Hex nut, 5/8-11	Plated steel
*18	Bury depth plate washer	Plated steel
*19	Bury depth plate	Aluminum
*21	Lock ring clamp	Malleable iron
22	Flange lock ring	Stainless steel
*23	Lower rod	Steel rod
24	Lower standpipe	Centrifugally cast ductile iron pipe
*25	Cotter pin, 1/4 x 1-1/2 in.	Stainless Steel
26	Crossarm	Ductile iron
*27	Drain plunger	Red brass
*28	Groove pin, 3/32 x 7/16 in.	Beryllium copper
29	Valve seat	Bronze
31	O-ring, 4-7/8 x 5-1/4	Buna-N
32	Main valve rubber	Urethane
33	Lower valve washer	Gray iron
34	Upper valve washer	Gray iron
35	Hydrant bottom	Gray iron
*36	Drain bushing	Brass
37	Operating nut housing	Gray iron
38	O-ring, 1" x 1-1/4	Buna-N
39	Spirol pin, hvy, 1/4 x 2-1/4 in.	Stainless steel
*46	Hex hd bolt, 5/8-11 x 3 in.	Plated steel
48	Valve seat insert	Silicone brass
49	Upper standpipe gasket	Neoprene
*53	Pumper nozzle retainer	Ductile iron
*54	Hose nozzle retainer	Ductile iron
*55	O-ring (pumper nozzle), 5-1/4 x 5-3/4	Buna-N
*56	O-ring (hose nozzle), 3-1/4 x 3-5/8	Buna-N
57	Upper standpipe	Centrifugally cast ductile iron pipe
58	Breakable flange	Gray iron
59	Standpipe flange	Ductile iron
77	Nozzle, pumper, Storz (with cap and gasket)	Bronze and Aluminum
78	Nozzle cap, pumper, Storz	Aluminum
79	Cap gasket, pumper, Storz	Buna-N
81	Clevis pin, 1/4 x 1-11/16 in.	Stainless Steel
82	Kickout ring	Stainless Steel
83	Thrust washer (used starting 2008)	Teflon

*These parts are interchangeable with Waterous Pacer parts.

Disassembling the Hydrant

View Video

WARNING: Special care should be taken in the installation, inspection and repair of pressure containing devices such as valves and hydrants. FAILURE TO FOLLOW PROPER PRACTICE AND GUIDELINES CAN RESULT IN SERIOUS INJURY OR DEATH. High pressure and water hammer, due to rapid opening or closing of a hydrant or valve, can also cause major damage to the hydrant, valve, water main, fire hose, or other attached equipment.

1. **Shut off water line leading to hydrant making sure the hydrant is not under pressure. FAILURE TO FOLLOW PROPER PRACTICE AND GUIDELINES CAN RESULT IN SERIOUS INJURY OR DEATH.** Partially open hydrant valve to relieve trapped pressure. Standing to the side of the hydrant and away from the direction of the hydrant cap(s), loosen one of the hose caps to relieve any pressure that may be present in the hydrant barrel.
2. ***See Figure 1, Page 2A-22***
   At the nozzle section, remove bolts (6A), nuts (6C), and allow flange (62B) to slide down the upper standpipe. Depth plate and washer (61) will come off with
3. bolts.
   Turn upper operating nut (17B) or weathershield nut (101) in the opening direction to separate the nozzle section (60) and the support (56). Remove the nozzle section. **Caution: use proper lifting and handling**
4. **techniques to avoid injury.**
   Remove operating nut (17B or 17) from the nozzle section (60). (On hydrants with weathershield, it is necessary to drive out pin (102) and remove weather-shield (101) before upper operating nut can be
5. removed.)
   Unscrew lower operating nut (17A - two- piece nuts,
6. 17 - one-piece nut), and remove support tube (85).
   Unscrew hex stop nut (86) from operating rod (71),
7. and remove support (56).
   Carefully lower disassembly wrench into standpipe over operating rod, and engage lugs of valve seat (31). See Figure on Page 2A-22

   Do not drop disassembly wrench into hydrant; it may damage valve seat and related parts.
8. Insert a three or four foot heavy steel bar (approximately 1 in. diameter) through eye of wrench, and turn in a counterclockwise direction to remove complete operating rod and valve assembly.
9. When valve seat (31) is clear of threads in hydrant bottom (37), remove disassembly wrench and lift out operating rod assembly. ***See Figure 3, Page 2A-23***
10. To disassemble lower portion of operating rod, remove cotter pin (8) or clevis pin (179) and kickout ring (180). Hold rod (72) with a pipe wrench or in a vise, and unscrew lower washer (36) with a 1-9/16 end wrench or suitable adjustable wrench. (Main valve (35), upper washer (34), valve seat (31), and cross arm (30) will come off with lower washer.) Slide drain plun-ger (7) from valve seat. Remove O-rings (3 and 77). Do not remove groove pin (81), which guides drain plunger, unless it is damaged.
11. Disassemble breakable coupling, unscrew nuts (87), and remove rod coupling halves (67) which join upper rod (71) to lower rod (72). Do not remove studs (88) unless they are damaged. (Breakable coupling disassembly is usually not necessary unless coupling parts are damaged.)

    NOTE: When a supply of gaskets and O-rings are available, always install new ones when reassembling the hydrant. Clean dirt from O- ring grooves.

Reassembling the Hydrant

View Video

WARNING: Special care should be taken in the installation, inspection and repair of pressure containing devices such as valves and hydrants. FAILURE TO FOLLOW PROPER PRACTICE AND GUIDELINES CAN RESULT IN SERIOUS INJURY OR DEATH. High pressure and water hammer, due to rapid opening or closing of a hydrant or valve, can also cause major damage to the hydrant, valve, water main, fire hose, or other attached equipment.

Note: Where grease is specified, use an AMERICAN Flow Control recommended food grade grease

See Figure 1, Page 2A-22

1. Assemble breakable coupling. Slide rod coupling halves (67) onto the studs (88) in the upper and lower rods (71, 72) and install coupling nuts (87).
2. If necessary, install new groove pin (81) in valve seat (31). Slide drain plunger (7) into seat with oblong hole at lower end. Grease O-ring grooves in valve seat and install O-rings (3 and 77). Be sure to remove any twists.
3. Slide crossarm (30) and valve seat (31) on operating rod (72). Position main valve (35) and upper washer (34) on lower washer (36). Screw lower washer onto rod, engaging diamond boss on lower washer in matching recess in crossarm. Position valve seal against valve seat (35) and tighten lower washer to at least 65 ft-lbs. Tighten enough to permit installation of the clevis pin (179) and kickout ring (180).
4. Coat threads of valve seat (31) with grease. Carefully lower assembled operating rod into standpipe until valve seat rests on threads in valve seat insert. Grasping rod (71) firmly with both hands, slowly turn in a counterclockwise direction until threads engage, then turn clockwise until it is hand-tight.
5. Slowly lower disassembly wrench over operating rod (71) in standpipe, and engage it with valve seat (31). See Figure 2 on Page 2A-23. Insert a 3 or 4 foot heavy steel bar through eye of wrench and tighten valve seat securely in valve seat insert. Remove wrench.
   Do not exceed 200 ft-lbs torque (50 lb pull on the end of a 4 ft bar). One person using a bar 3 to 4 feet long can easily exert enough force to tighten valve seat. Further tightening may make future seat removal more difficult.
6. Pull rod up as far as it will go (main valve will now be closed. Hold in this position while an assistant slowly turns on the water.

   WARNING:To prevent serious personal injury, do not stand over rod when assistant turns on the water.
7. Visually check for possible leaks before proceeding with the next step.

See Figure 3, Page 2A-23

8. Grease O-ring and gasket grooves in support (56), and install O-rings (59), gaskets (84) and lower tube seal (83). Tape threads of operating rod (71) to protect O-rings, and install support. Remove tape from threads.
9. Install hex stop nut (86), turning it down to end of thread. Snug up with a torque of 30 ft-lbs (30 lb at end of 12 in. wrench).
10. Grease groove in upper end of support tube (85), and install upper tube seal (82). Slide tube down over operating rod (71) until it is seated on support (56).
11. Grease threads of operating rod (71) and lower bearing surface of operating nut (17A or 17). Screw lower operating nut onto rod while centering support (56) on the standpipe. Tighten operating nut (17A or 17) to securely clamp support (56) against upper standpipe (40). Be sure support (56) is centered on upper standpipe (40).
12. Grease and install thrust ring (90) and O-ring (57) in operating nut (17B or 17). If hydrant has a two-piece operating nut, set upper operating nut (17B) on lower operating nut (17A) and engage lugs in slots.
13. Carefully lower nozzle section (60) over operating nut (17b or 17) until it seats on support (56). Rotate nozzle section (60) to desired position. Install bolts (6A) and nuts (6C) through flange of nozzle section and standpipe flange (62B) and tighten finger tight. Be sure to install depth plate and washers (61) in proper position. Make sure flange (62B) is seated properly up under flange, and tighten all bolts and nuts evenly. Tighten to 60-70 ft-lbs of torque.
14. Back off operating nut slightly to release tension on operating rod. Since water pressure will hold valve up against seat, it is not necessary to turn operating nut to a dead stop if the valve and seat are in good condition.
15. Lubricate hydrant per "Lubrication" portion of the "Maintenance" section.

Figure 1. *Repair Diagram*

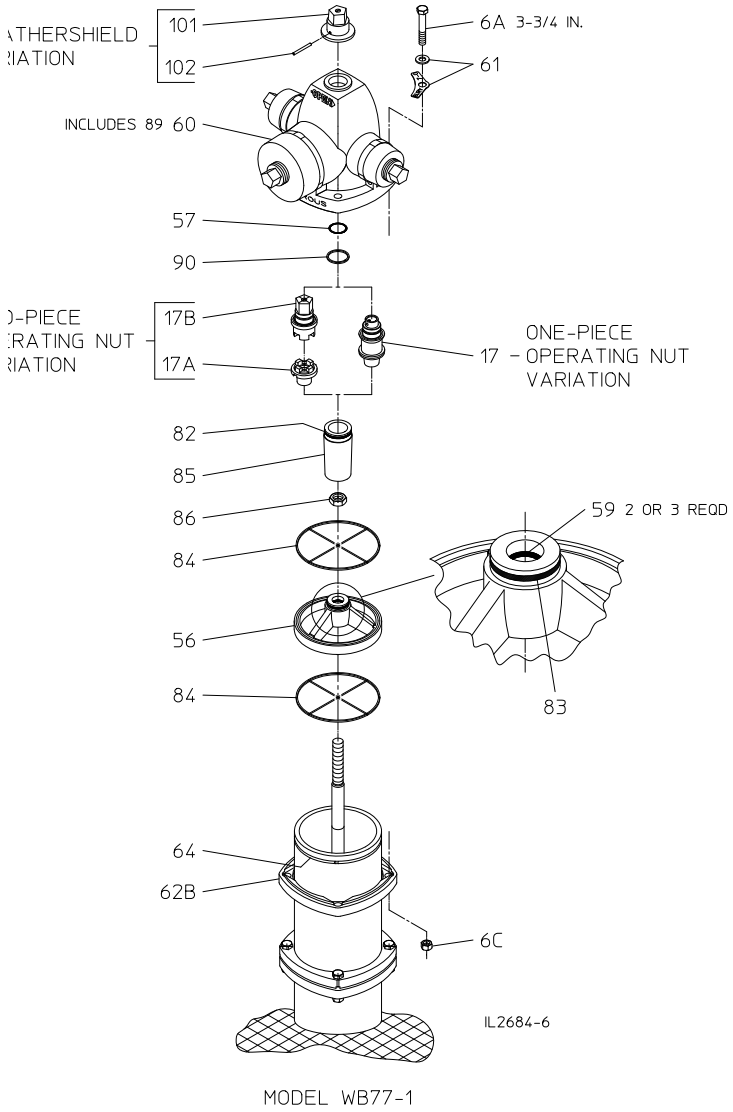

Figure 2. *Rod Removal*

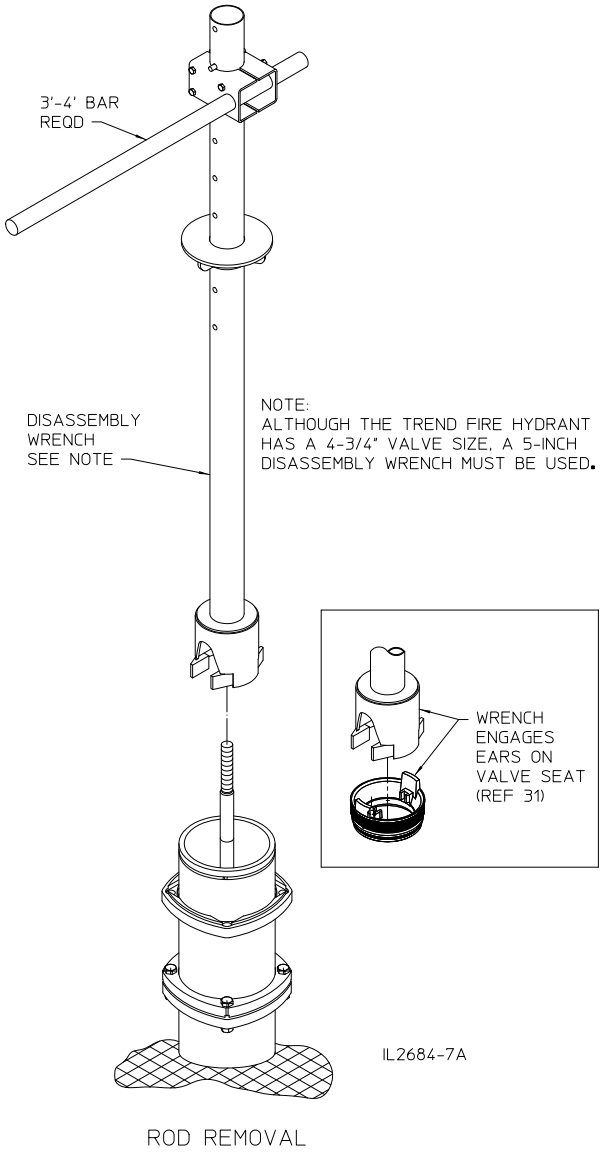

Figure 3. Rod Disassembly

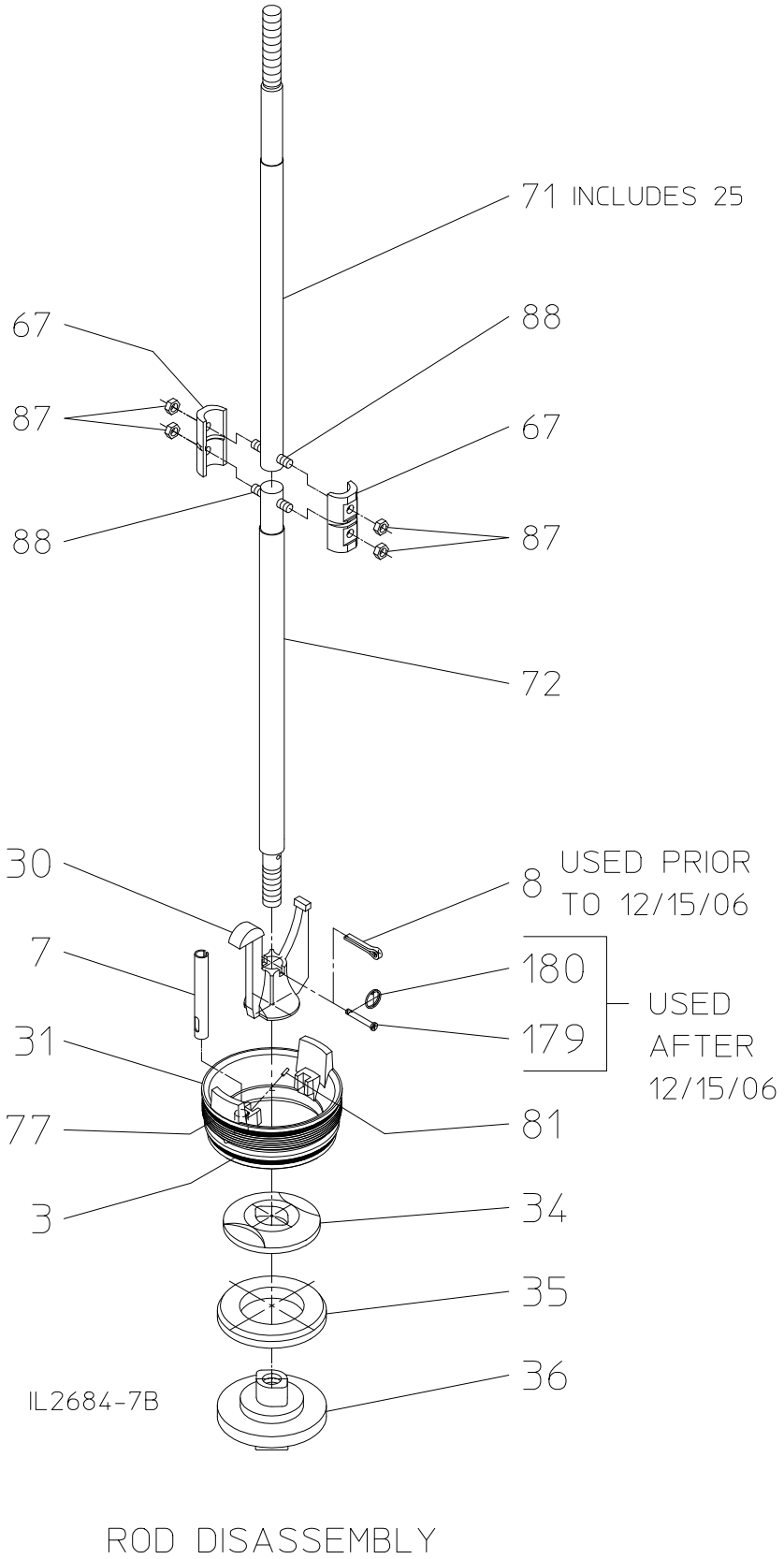

4-3/4" Waterous Trend Model WB77-1 - Traffic Damage Repair

View Video

WARNING: Special care should be taken in the installation, inspection and repair of pressure containing devices such as valves and hydrants. FAILURE TO FOLLOW PROPER PRACTICE AND GUIDELINES CAN RESULT IN SERIOUS INJURY OR DEATH. High pressure and water hammer, due to rapid opening or closing of a hydrant or valve, can also cause major damage to the hydrant, valve, water main, fire hose, or other attached equipment.

See Figure 1, Page 2A-25

Should a hydrant be struck by a vehicle such that the upper barrel is seperated / broken from the lower barrel, the following procedure should be followed to reassemble the hydrant and make it operational. (A traffic damage repair kit for the specific hydrant is required to perform this procedure.)

The extent of a traffic impact may be unknown. It is considered safe practice to close the auxilliary valve ahead of the hydrant, or use another means to cut off flow and pressure to the hydrant.

Note: Where grease is specified, use an AMERICAN Flow Control recommended food grade grease.

1. At the groundline, remove bolts (6B) and nuts (6C) which attach the upper and lower flanges. Discard the gasket, nuts and bolts.

   Note: If top of the hydrant is completely broken away from the lower portion of the hydrant, step 1 may not be necessary.
2. At the nozzle section, remove bolts (6A), nuts (6C) and allow flange (62B) to slide down the upper standpipe. Depth plate and plain washer (61) will come off with bolts.
3. Turn upper operating nut (17B) or weathershield nut (101) in the opening direction separate the nozzle section (60) and the support (56). Remove the nozzle section. **Use proper handling techniques to avoid injury.**
4. Remove operating nut (17B or 17) from the nozzle section (60). (On hydrants with weathershield, it is necessary to drive out pin (102) and remove weathershield
   (101) before upper operating nut can be removed.)
5. Unscrew lower operating nut (17A - two- piece nuts, 17 - one-piece nut), and remove support tube (85).
6. Unscrew hex stop nut (86) from operating rod (71), and remove support (56).
7. Remove coupling nuts (87) and sleeves (67) from upper and lower rods (71 & 72). Carefully check upper rod (71) to make sure it is not bent more than 1/8 in. out of straightness. Straighten or replace if necessary. Also check studs (88) for thread damage or bending which will prevent the installation of a new coupling. Replace studs if necessary.
8. Position upper rod (71) over lower rod (72) and install new coupling halves (67). Install nuts (87) and tighten securely.
9. Remove lock ring (64) from the bottom of the upper standpipe (40). Remove old breakable flange (113) from the upper standpipe if it is still attached (in most cases, it will fracture and disengage itself from the upper standpipe). Slide new breakable flange (113) over the upper standpipe (40). Orient flange so that the larger ID of the flange will point down and properly engage the lock ring. Install lock ring (64) in the bottom groove of the upper standpipe (40). Slide flange (113) down and over the lock ring (64). See Figure 2, on Page 2A-25.
10. Place new gasket (92) on the lower standpipe with the lip pointing down. Position the upper standpipe (40) on the lower standpipe and install bolts (6B) thru flanges (113) and (63). Install nuts (6C) and tighten the four bolts evenly. Tighten to 60-70 ft-lbs of torque.
11. Grease O-ring and gasket grooves in support (56), and grease O-rings (59), gaskets (84) and lower tube seal (83). Tape threads of operating rod (71) to protect O-rings. Install support (56) onto operating rod (71), being careful not to damage O-rings on operating rod threads. Remove tape from threads.
12. Install hex stop nut (86), threading it down to end of thread. Snug up with a torque of 30 ft-lbs (30 lb at end of 12 in. wrench).
13. Grease O-ring in upper end of support tube (85). Slide tube down over operating rod (71) until it is seated on support (56).
14. Grease threads of operating rod (71) and lower bearing surface of operating nut (17A or 17). Screw lower operating nut onto rod while centering support (56) on the standpipe. Tighten operating nut (17A or 17) to securely clamp support (56) against upper standpipe (40). Be sure support (56) is centered on upper standpipe (40).
15. Grease and install thrust ring (90) and O-ring (57) in upper operating nut (17B or 17). If hydrant has a two-piece operating nut, set upper operating nut (17B) on lower operating nut (17A) and engage lugs in slots.

    Note: Be sure to install the upper standpipe correctly. The groove at the top must be 3/4 in. from the end. The groove at the bottom must be 3/8 in. from the end. Also, the breakable flange (113) must be at the bottom (groundline) end of the upper standpipe. See Figure 2, on Page 2A-25.

16. Carefully lower nozzle section (60) over upper operating nut (17B or 17) until it seats on support (56). Rotate nozzle section (60) to desired position. Install bolts (6A) and nuts (6C) through flange of nozzle section and flange (62B) and tighten finger tight. Be sure to install depth plate and washers (61) in proper position. Make sure flange (62B) is seated properly with flange lock ring (64) and tighten all bolts and nuts evenly. Tighten to 60-70 ft-lbs of torque.
17. Back off operating nut slightly to release tension on operating rod. Since water pressure will hold valve up against seat, it is not necessary to turn operating nut to a dead stop if the valve and seat are in good condition.
18. Lubricate hydrant as shown in Figure 3.
    Note: When a supply of gaskets and O- rings are available, always install new ones when reassembling the hydrant. Clean dirt from O-ring grooves.

Figure 1. Trend Model WB77-1

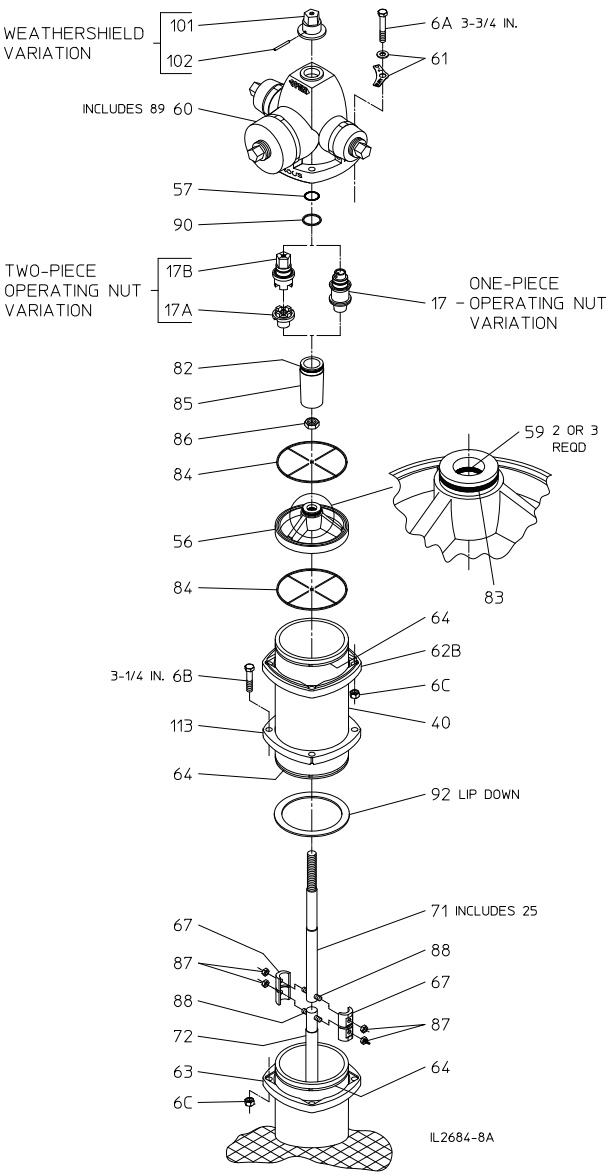

Figure 2. Upper Standpipe (Breakable Flange Orientation)

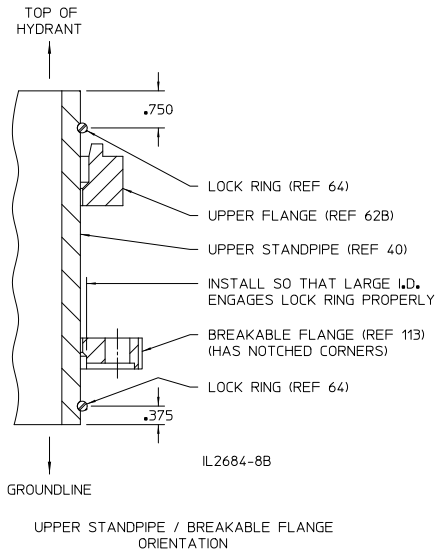

Figure 3. Lubrication Detail

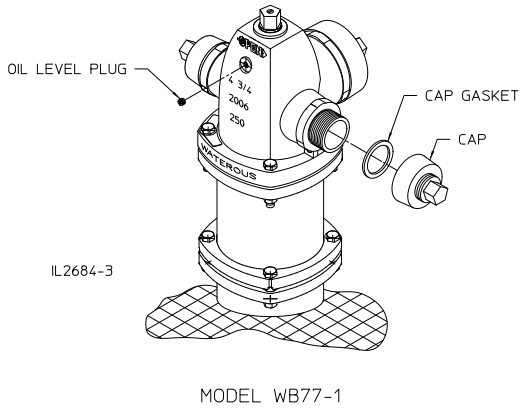

1. Remove oil level plug and add oil to the level of the plug. Use an AMERICAN Flow Control recommended oil.
2. Remove all nozzle caps, clean rust or corrosion from threads of nozzles and caps. Replace cap gaskets if necessary. Apply a light coat of grease to nozzle threads before replacing cap. Use an AMERICAN Flow Control recommended food grade grease.

4-3/4” Waterous Trend - Nozzle Replacement

View Video

Mechanically Attached Nozzles

WARNING: POTENTIAL HYDRANT CAP HAZARD. FAILURE TO RELIEVE PRESSURE CAN RESULT IN THE CAP BLOWING OFF, CAUSING SERIOUS INJURY OR DEATH. Make sure the auxiliary gate valve in the lateral between the main and the hydrant is closed and that the hydrant is not charged with pressure when removing caps.

On 4-3/4” Waterous Trend fire hydrants that are equipped with Mechanically Attached nozzles, a retainer is threaded onto the nozzle, an O-ring against the face of the outlet socket of the nozzle section, creating a water tight seal.

Waterous has The following wrenches are available for removing and installing retainers.

- For Threaded Pumper Nozzles and 4-inch Storz Nozzles: Part No. 81420
- For 5 in. Storz Pumper Nozzles: Part No. 82766
- For 2½ inch Hose Nozzles: Part No. 72094

Figure 1. Mechanically Attached Nozzles

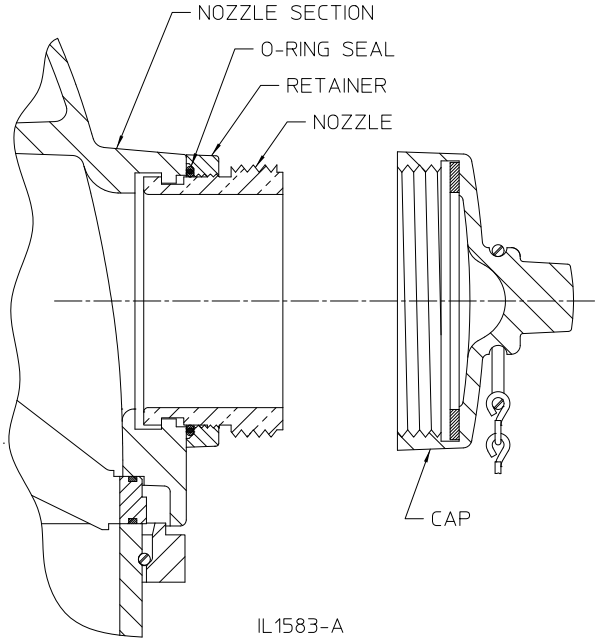

4-3/4” Waterous Trend - Nozzle Replacement
Mechanically Attached Pumper Nozzle

View Video

Removal

WARNING: POTENTIAL HYDRANT CAP HAZARD. FAILURE TO RELIEVE PRESSURE CAN RESULT IN THE CAP BLOWING OFF, CAUSING SERIOUS INJURY OR DEATH. Make sure the auxiliary gate valve in the lateral between the main and the hydrant is closed and that the hydrant is not charged with pressure when removing caps.

1. Carefully remove the cap while standing away from the direction of potential discharge.
2. Place wrench on the retainer so it engages the rounded protrusions and unthread from nozzle.

   Removal of the 5-inch Storz hydrant nozzle requires the use of the hinged pumper-nozzle retainer wrench (Waterous Part No. 82766).
3. Rotate nozzle counterclockwise until the four lugs on the nozzle disengage the recesses in the nozzle section socket which will allow the nozzle to be removed.

Installation

1. Thread retainer onto the retainer threads of the pumper nozzle.
2. Grease O-ring and place it over nozzle starting from the end with the four lugs and into the chamfer recess in the retainer.
3. Insert the nozzle/retainer/O-ring subassembly into the socket in the nozzle section. Rotate the subassembly clockwise until it stops with the four lugs on the nozzle fully engaged in the anti-rotation recesses in the socket. If it cannot be rotated, turn the retainer in a direction to allow the nozzle to be inserted further into the socket so the subassembly rotates clockwise against the stops.
4. Hand tighten the retainer to press O-ring against the face of the socket.
5. Place wrench on the retainer so it engages the rounded protrusions, tighten firmly.

   Installation of the 5-inch Storz hydrant nozzle requires the use of the hinged pumper-nozzle retainer wrench (Waterous Part No. 82766).
6. Clean rust or corrosion from cap threads and replace cap gasket if necessary. Apply a light coat of grease to the nozzle threads and install the cap.
7. Cap all nozzles and open the hydrant valve, check the area around the repaired nozzle for leaks.

   NOTE: Where grease is specified, use an AMERICAN Flow Control recommended food grade grease.

Figure 2. Mechanically Attached Pumper Nozzle

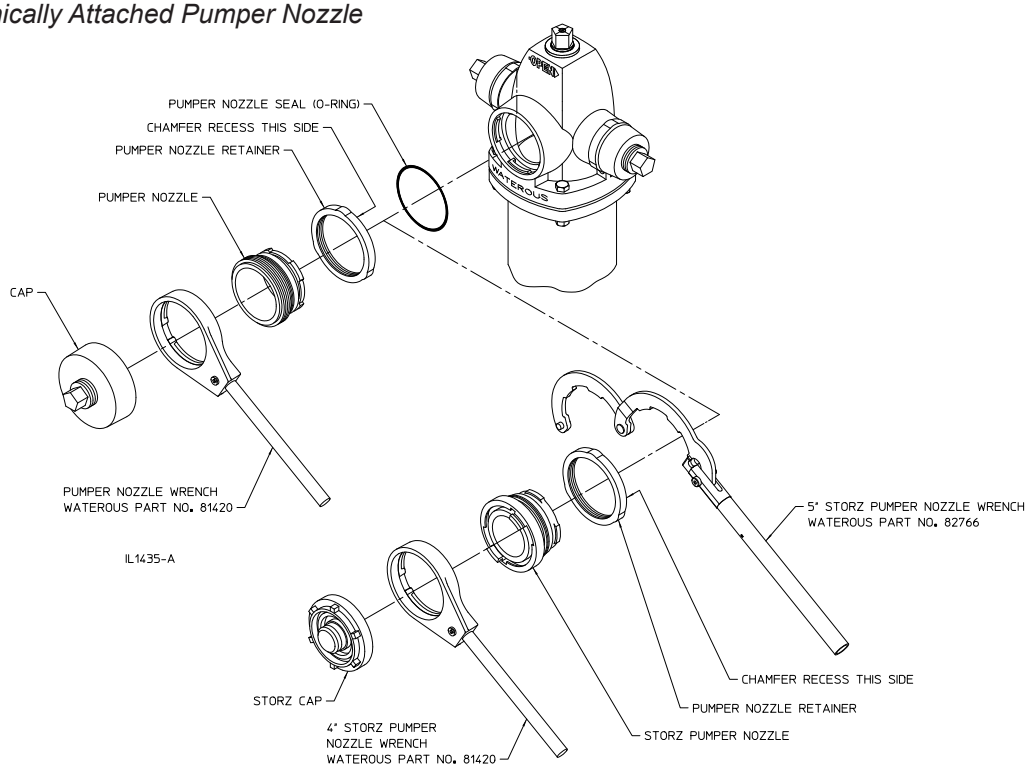

4-3/4" Waterous Trend - Nozzle Replacement
Mechanically Attached 2-1/2" Hose Nozzle

View Video

Removal

WARNING: POTENTIAL HYDRANT CAP HAZARD. FAILURE TO RELIEVE PRESSURE CAN RESULT IN THE CAP BLOWING OFF, CAUSING SERIOUS INJURY OR DEATH. Make sure the auxiliary gate valve in the lateral between the main and the hydrant is closed and that the hydrant is not charged with pressure when removing caps.

1. Carefully remove the cap while standing away from the direction of potential discharge.

2. Place wrench on the retainer so it engages the rounded protrusions and unthread from nozzle.

3. Rotate nozzle counter-clockwise until the two lugs on the nozzle disengage the recesses in the nozzle section socket which will allow the nozzle to be removed.

1. Insert hose nozzle into the socket of the nozzle section, turn clockwise until it stops with the two lugs on the nozzle fully engaged in the anti-rotation recesses in the socket.
2. Grease O-ring and place it over the nozzle and against the face of the socket.
3. Thread retainer onto the hose nozzle and hand tighten to press the O-ring against the face of the socket.

4. Place wrench on retainer so it engages the rounded protrusions, and tighten firmly.
5. Clean rust or corrosion from cap threads and replace cap gasket if necessary. Apply a light coat of grease to the nozzle threads and install the cap.

NOTE: Where grease is specified, use an AMERICAN Flow Control recommended food grade grease.

Figure 3. Mechanically Attached Hose Nozzle

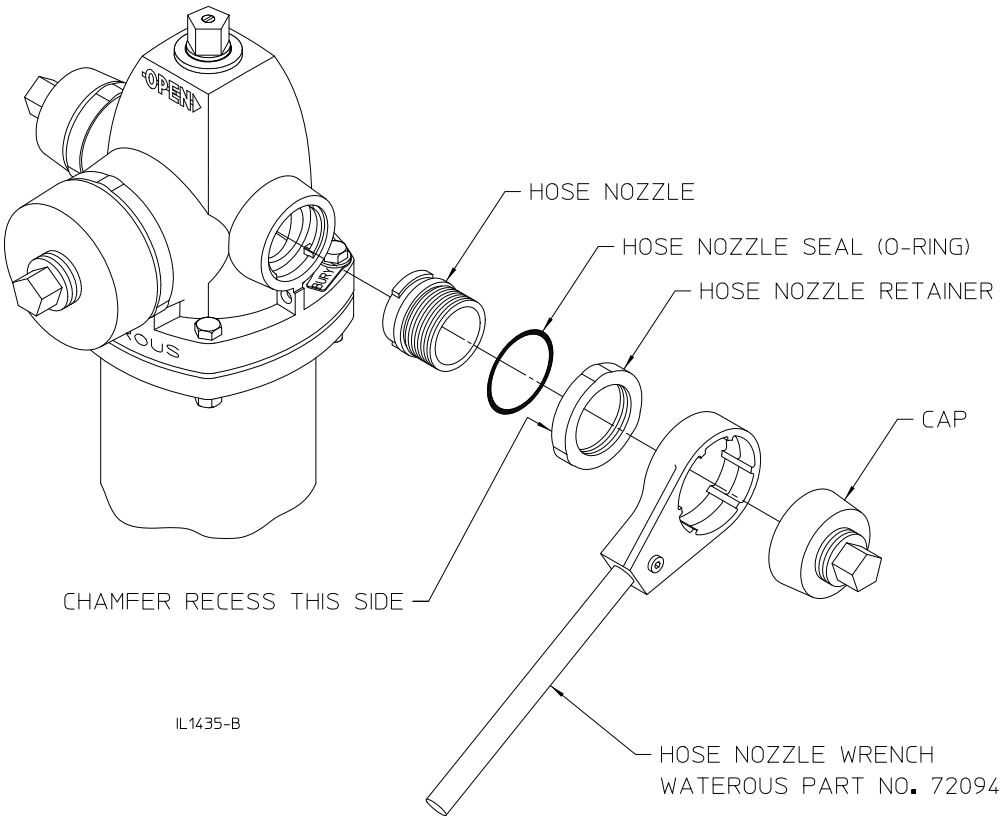

4-3/4” Waterous Trend Model WB77-1 - Extension Instructions Using Standpipe and Rod Extension Kit K562

View Video

Identification Diagram

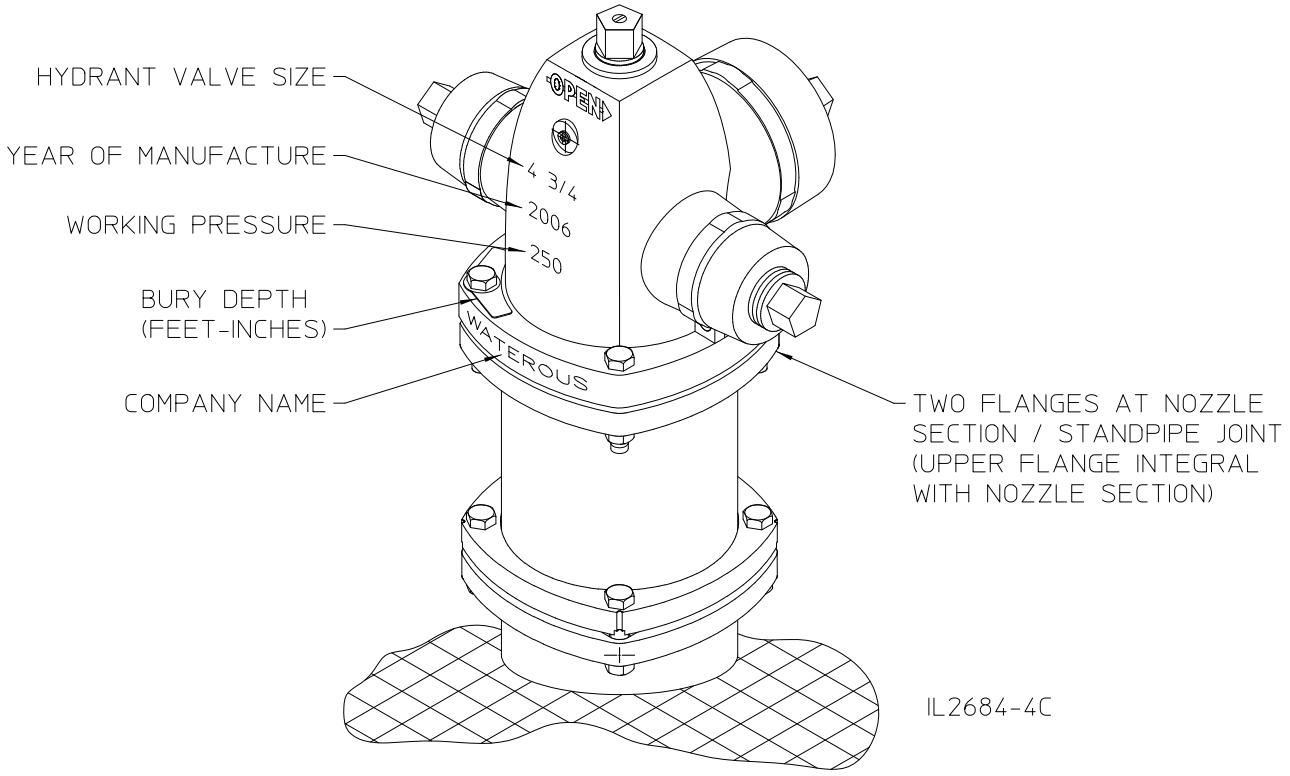

MODEL WB77-1: BUILT FROM 2006 TO PRESENT

Important Notes

1. AMERICAN recommends a new rod corresponding to the extended bury or cover depth be installed in place of a rod extension if the hydrants meet one or more of the following criteria:

   a. The length of the rod extension required exceeds 4 ft-0 in..

   b. The hydrant has already been extended. Only one rod extension per hydrant is recommended.

2. If extended depth of hydrant will exceed 11 ft-6 in. bury, a “bottom extension” should be installed in place of a standpipe and rod extension.

3. Contact AMERICAN for appropriate parts and guidance if any of the above situations exist.

4-3/4" Waterous Trend Model W77B-1 – Extension Instructions Using Standpipe and Rod Extension Kit K562

WARNING: Special care should be taken in the installation, inspection and repair of pressure containing devices such as valves and hydrants. FAILURE TO FOLLOW PROPER PRACTICE AND GUIDELINES CAN RESULT IN SERIOUS INJURY OR DEATH. High pressure and water hammer, due to rapid opening or closing of a hydrant or valve, can also cause major damage to the hydrant, valve, water main, fire hose, or other attached equipment.

Note: Where grease is specified, use an AMERICAN Flow Control recommended food grade grease.

1. Close hydrant valve. It is considered safe practice to close the auxiliary valve ahead of the hydrant, or use another means to cut off flow and pressure to the hydrant. Always standing to the side of the hydrant and away from the direction of the hydrant caps, loosen one of the hose caps to relieve any pressure that may be present in the hydrant barrel. **WARNING: FAILURE TO RELIEVE PRESSURE CAN RESULT IN THE CAP BLOWING OFF, CAUSING SERIOUS INJURY OR DEATH.**

   See Figure 2 , Page 2A-31
2. At the nozzle section, remove bolts (6A), nuts (6C), and allow flange (62B) to slide down the upper standpipe. Depth plate and washer (61) will come off with bolts.
3. Turn upper operating nut (17B) or weathershield nut (101) in the opening direction to separate the nozzle section (60) and the support (56). Remove the nozzle section, lifting upwards. **Use proper handling and lifting techniques to avoid injury.**
4. Remove operating nut (17B or 17) from the nozzle section (60). (On hydrants with weathershield, it is necessary to drive out pin (102) and remove weathershield (101) before upper operating nut can be removed.)
5. Unscrew lower operating nut (17A - two- piece nuts, 17 - one-piece nut), and remove support tube (85).
6. Unscrew hex stop nut (86) from operating rod (28), and remove support (56).
7. Remove bolts (6B) and nuts (6C) and lift off upper standpipe (40). Discard gasket (92), bolts (6B) and nuts (6C). Note that flange (113) and (62B) will remain attached to the upper standpipe (40). It is not necessary to remove these flanges. They may remain on the upper standpipe.
8. Safely disassemble breakable coupling. Unscrew nuts (87) and remove rod coupling halves (67) which join the upper rod (71) to the lower rod (72). Do not remove studs (88) unless they are damaged.
9. Install rod extension (74) on existing lower rod (72) using extension couplings (174). Slide coupling halves (174) onto studs in rod extension (74) and lower rod (72) and install nuts (87). Note: Be sure extension couplings are installed at the original ground line. Refer to Figure 4 on Page 2A-31.
10. Install flanges (63) and lock rings (64) onto standpipe extension (45). Be sure to orient flanges properly. Refer to Figure 3 on Page 2A-31.
11. Install gasket (92) on existing standpipe with lip pointing down. Install standpipe extension (45) on existing standpipe. Install bolts (6D) and nuts (6C) thru flanges (63) and tighten finger tight. Make sure flanges (63) are seated properly on lock rings (64) and tighten all bolts and nuts evenly. Tighten to 60-70 ft-lbs torque.
12. Install existing upper rod (71) onto rod extension (74) using breakable couplings (67). Slide coupling halves (67) onto studs in rod extension (74) and upper rod (71) and install nuts (87). Note: Be sure breakable couplings are installed at the new ground line. Refer to Figure 4 on Page 2A-31.
13. Install gasket (92) on standpipe extension (45) with lip pointing down. Install existing upper standpipe (40) on standpipe extension. Install bolts (6B) and nuts (6C) thru flanges (113) and (63) and tighten finger tight. Be sure flanges engage lock rings (64) properly and tighten all bolts and nuts evenly. Note that breakable flange (113) must be on the bottom of the upper standpipe. Also, upper standpipe (40) must be installed properly with the groove 3/4 in. from the end at the top and the groove 3/8 in. from the end at the bottom. Refer to Figure 4 on Page 2A-31.
14. Grease O-ring and gasket grooves in support (56), and grease O-rings (59), gaskets (84) and lower tube seal (83). Tape threads of operating rod (71) to protect O-rings. Install support (56) onto operating rod (71), being careful not to damage O-rings on operating rod threads. Remove tape from threads.
15. Install hex stop nut (86), turning it down to end of thread. Snug up with a torque of 30 ft-lbs (30 lb at end of 12 in. wrench).
16. Grease O-ring in upper end of support tube (85). Slide tube down over operating rod (71) until it is seated on support (56).
17. Grease threads of operating rod (71) and lower bearing surface of operating nut (17A or 17). Screw lower operating nut onto rod while centering support (56) on the standpipe. Tighten operating nut (17A or 17) to securely clamp support (56) against upper standpipe (40). Be sure support (56) is centered on upper standpipe (40).
18. Grease and install thrust ring (90) and O-ring (57) in operating nut (17B or 17). If hydrant has a two piece operating nut, set upper operating nut (17B) on lower operating nut (17A) and engage lugs in slots.

Using Standpipe and Rod Extension Kit K562

19. Carefully lower nozzle section (60) over operating nut (17b or 17) until it seats on support (56). Rotate nozzle section (60) to desired position. Install bolts (6A) and nuts (6C) through flange of nozzle section and flange (62B) and tighten finger tight. Be sure to install depth plate and washers (61) in proper position. Also install extension plate (157) opposite the bury depth plate (see Figure 5 on Page 2A-32). Make sure flange (62B) is seated properly with lock ring (64) and tighten all bolts and nuts evenly. Tighten to 60-70 ft-lbs of torque.
20. Back off operating nut slightly to release tension on operating rod. Since water pressure will hold valve up against seat, it is not necessary to turn operating nut to a dead stop if the valve and seat are in good condition.
21. Lubricate hydrant as shown in Figure 6 on Page 2A-32.

    Note: When a supply of gaskets and O-rings are available, always install new ones when reassembling the hydrant. Clean dirt from O-ring grooves.

Installation Diagram - Trend Model WB77-1

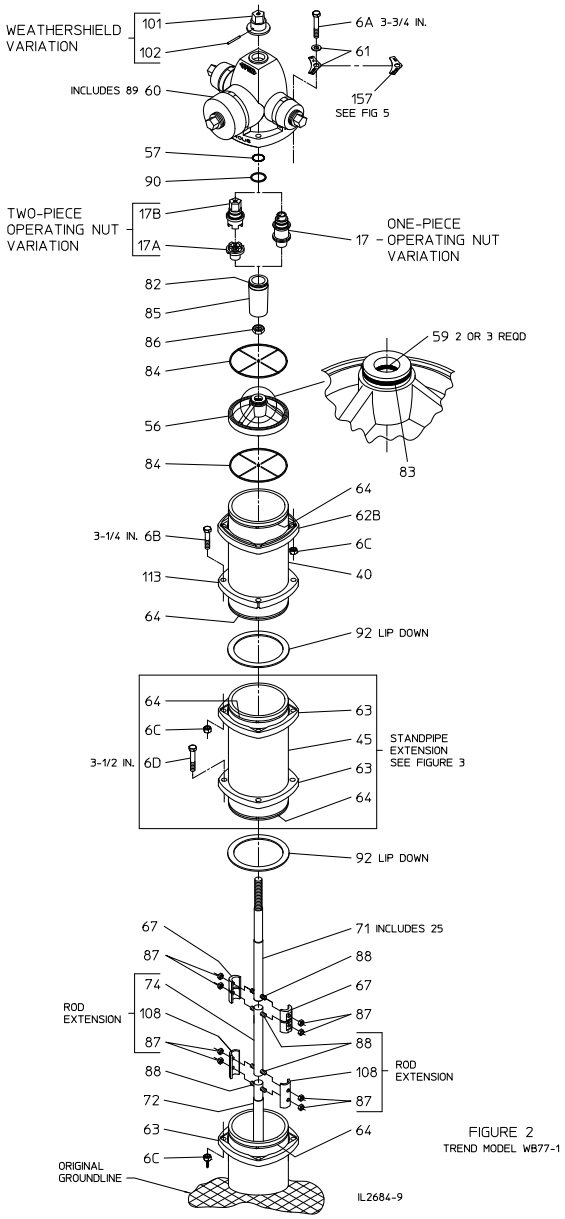

FIGURE 2
TREND MODEL WB77-1

4-3/4" Waterous Trend Model WB77-1 - Extension Instructions

Using Standpipe and Rod Extension Kit K562

Figure 3. Standpipe Extension / Flange Orientation

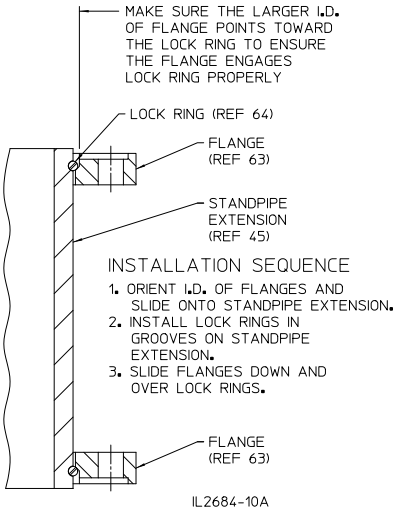

Figure 5. Extension Plate Installation

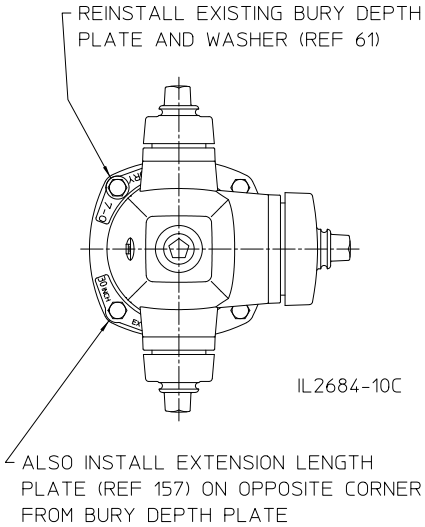

Figure 4. Extension Parts / Existing Parts Orientation

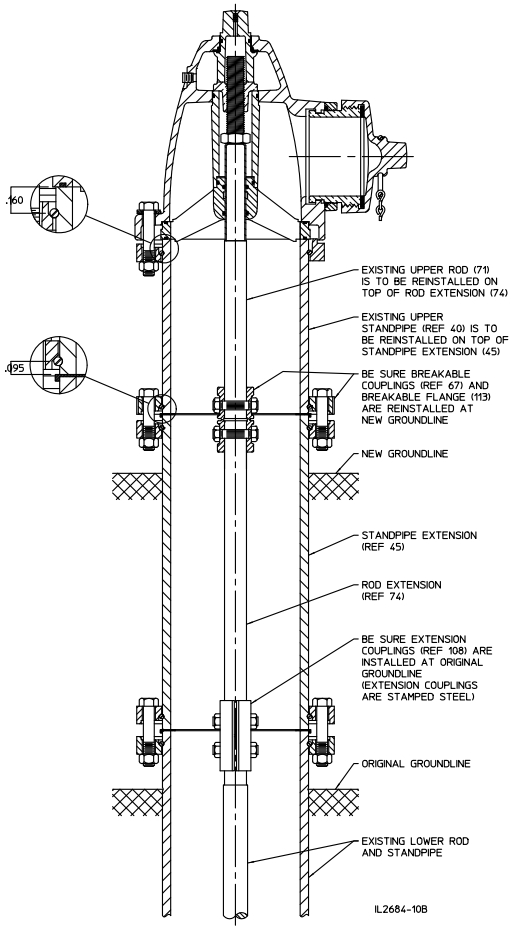

Figure 6. Lubrication Detail

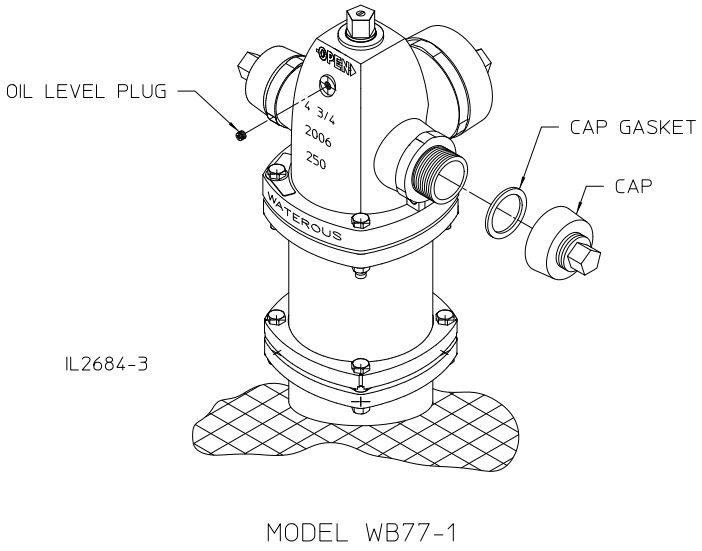

1. Remove oil level plug. Add oil to the level of the plug. Use an AMERICAN Flow Control recommended oil.

2. Remove all nozzle caps, clean rust or corrosion from threads of nozzles and caps. Replace cap gaskets if necessary. Apply a light coat of grease to nozzle threads before replacing cap. Use an AMERICAN Flow Control recommended food grade grease.

4-3/4” WATEROUS TREND SPECIFICATIONS

Fire hydrants shall meet or exceed ANSI/AWWA C502, latest revision. Rated working pressure shall be 250 psig, test pressure shall be 500 psig and hydrants shall include the following specific design criteria:

- The nozzle section, upper and lower stand pipes and hydrant base shall be ductile iron.
- External surfaces above grade shall be factory coated with an epoxy primer and a two-part polyurethane top coating.
- The main valve closure shall be of the compression type, opening against the pressure and closing with the pressure. Nozzle section to be designed for easy 360° rotation by the loosening of no more than four bolts.
- The valve opening diameter shall be 4-3/4 in.. Hydrant must be designed so that removal of all working parts can be accomplished without excavating. The bronze seat shall be threaded into mating threads of bronze for easy field repair.
- Bolting below grade shall be stainless steel.
- The draining system of the hydrant shall be bronze and be positively activated by the main operating rod. Hydrant to be furnished with a sliding bronze drain valve. Sliding drain valves made of rubber, plastic or leather will not be allowed.
- Hydrant must have an internal travel stop nut located in the top housing of the hydrant.
- Hydrant operating threads to be factory lubricated. O-rings shall be furnished to help keep operating threads lubricated and protected from line fluid and from the weather.
- Hydrant must have a traffic flange design allowing for quick and economical repair of damage resulting from a vehicle’s impact.
- Hydrants shall be the **4-3/4” Waterous Trend (Model WB77-1)** by AMERICAN Flow Control.

INDEX

5-1/4" WATEROUS PACER® FIRE HYDRANT

Page

INTRODUCTION AND HISTORY 2B-2

ORDERING

Dimensions:

Overall Hydrant 2B-3

Optional Bottoms (Bases) 2B-4

Operating Nut Sizes 2B-5

Weights 2B-6

Friction Loss 2B-7

Submittal Sheet 2B-8

INSTALLATION AND TESTING

Installation 2B-9, 2B-10

Testing 2B-11, 2B-12

OPERATION AND MAINTENANCE

Operation 2B-12

Maintenance 2B-13

Troubleshooting Guide 2B-14

REPAIRS

Identifying Pacer Variations 2B-15

Ordering Repair Parts 2B-15

Parts List:

250 PSIG Rated Ductile Iron Pacer 2B-16, 2B-17

150 PSIG Rated Gray Iron Pacer 2B-18, 2B-19

Repair Instructions ..... 2B-20 thru 2B-24

Traffic Damage Repair 2B-25, 2B-29

Nozzle Replacement 2B-30

Mechanically Attached Nozzles 2B-31, 2B-32

EXTENDING

Traffic Models ..... 2B-33 thru 2B-36

Non-Traffic Models ..... 2B-37 thru 2B-40

SPECFICATIONS 2B-41

5-1/4" WATEROUS PACER® FIRE HYDRANT

View Video

The 5-1/4" Waterous Pacer's sleek and stylish design blends perfectly with today's modern architecture. The Pacer is rated for 250 psig and meets or exceeds all of the requirements of ANSI/AWWA C-502. Ductile iron construction assures strength and durability.

Introduced in 1967, the 5-1/4" Waterous Pacer fire hydrant provides real solutions to today's system demands. With many cities experiencing increased pressure to stretch their dollars, it is important to note that the Pacer hydrant can be maintained by just one person. The removal of four bolts and nuts allows access to all working parts.

The 5-1/4" Waterous Pacer hydrant has all the features you expect from a high quality fire hydrant. The epoxy primer and polyurethane top coat system on external surfaces of the upper barrel provide a durable, high-gloss finish that will continue to look good for years without repainting. The all bronze valve seat and bronze seat insert help assure that the Pacer hydrant remains easy to repair. The Pacer has been manufactured for more than forty years while still maintaining parts interchangeability.

5-1/4" WATEROUS PACER® - DIMENSIONS

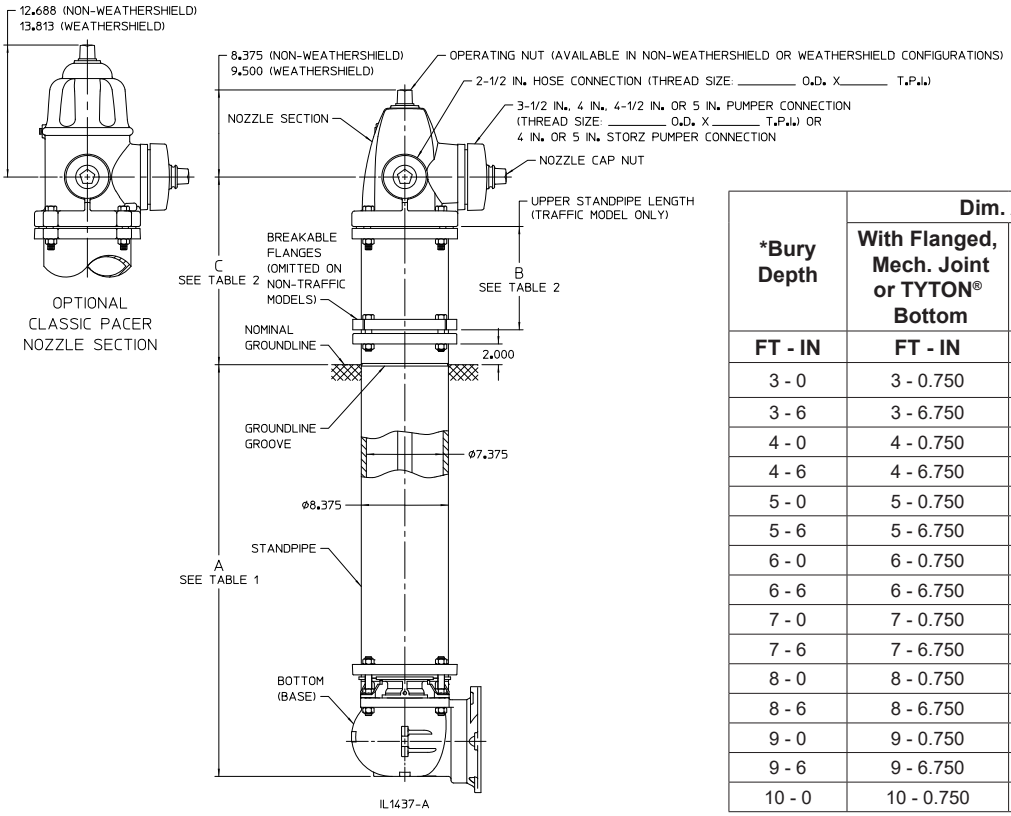

TABLE 1

*Bury Depth	Dim. A		Rod Length	
	With Flanged, Mech. Joint or TYTON® Bottom	** With Vertical Entry Bottom	Traffic Model (Lower Rod Length)	Non - Traffic Model
FT - IN	FT - IN	FT - IN	FT - IN	FT - IN
3 - 0	3 - 0.750	3 - 3.125	2 - 9.312	4 - 6.062
3 - 6	3 - 6.750	3 - 9.125	3 - 3.312	5 - 0.062
4 - 0	4 - 0.750	4 - 3.125	3 - 9.312	5 - 6.062
4 - 6	4 - 6.750	4 - 9.125	4 - 3.312	6 - 0.062
5 - 0	5 - 0.750	5 - 3.125	4 - 9.312	6 - 6.062
5 - 6	5 - 6.750	5 - 9.125	5 - 3.312	7 - 0.062
6 - 0	6 - 0.750	6 - 3.125	5 - 9.312	7 - 6.062
6 - 6	6 - 6.750	6 - 9.125	6 - 3.312	8 - 0.062
7 - 0	7 - 0.750	7 - 3.125	6 - 9.312	8 - 6.062
7 - 6	7 - 6.750	7 - 9.125	7 - 3.312	9 - 0.062
8 - 0	8 - 0.750	8 - 3.125	7 - 9.312	9 - 6.062
8 - 6	8 - 6.750	8 - 9.125	8 - 3.312	10 - 0.062
9 - 0	9 - 0.750	9 - 3.125	8 - 9.312	10 - 6.062
9 - 6	9 - 6.750	9 - 9.125	9 - 3.312	11 - 0.062
10 - 0	10 - 0.750	10 - 3.125	9 - 3.312	11 - 6.062

***NOTE:** Bury depth is the nominal distance from groundline to bottom of connecting pipe. 1 ft 6 in. - 11 ft 6 in. bury depth's are available.

****NOTE**: For vertical entry bottoms, bury depth is measured to the face of the inlet flange. See detail on next page.

TABLE 2

DIM. B Upper Standpipe Length (Traffic Models Only)	DIM. C Nozzle Elevation Above Groundline	
	Traffic Model (WB67-250)	Non-Traffic Model (WB67-250)
10 IN.	18 IN.	18 IN.
16 IN.	24 IN.	
22 IN.	30 IN.	
28 IN.	36 IN.	
34 IN.	42 IN.	

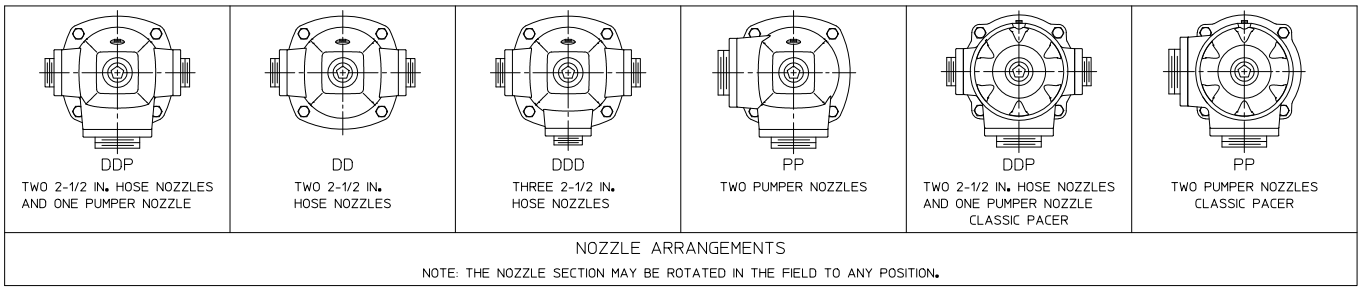

IL1437-B

NOTES:
1. 250 psig rated working pressure.
2. Meets or exceeds requirements of AWWA C502, latest revision.
3. UL Listed and Approved by FM Approvals at 250 psig in allowable configurations.
4. Certified to NSF/ANSI Standard 61 and NSF/ANSI 372.
5. TYTON® is a registered trademark of United States Pipe and Foundry Co., LLC.

5-1/4" WATEROUS PACER® - DIMENSIONS, OPTIONAL BOTTOMS (BASES)

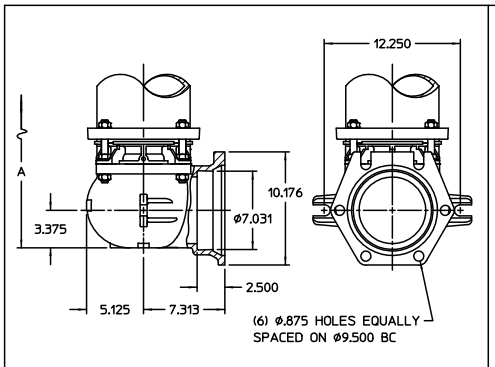

6 INCH MECHANICAL JOINT CONNECTION

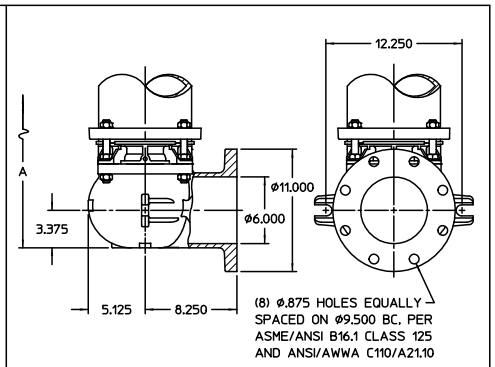

6 INCH FLANGED CONNECTION

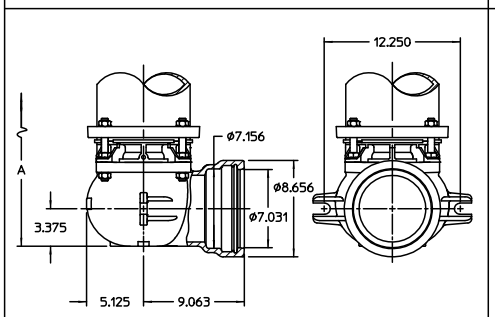

6 INCH TYTON® JOINT CONNECTION

TYTON® is a registered trademark of United States Pipe and Foundry Co., LLC.

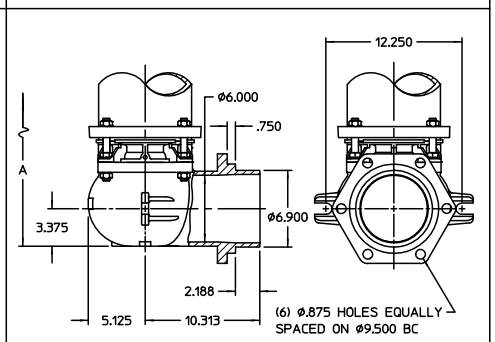

6 INCH PLAIN END W/INTEGRAL MJ GLAND CONNECTION

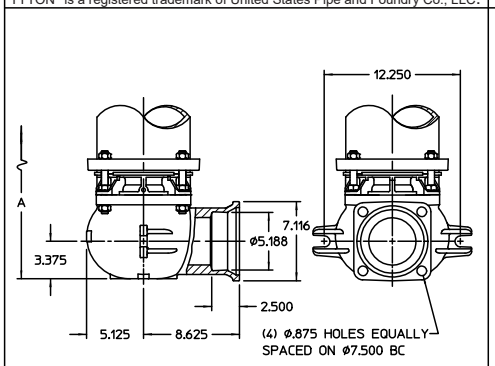

4 INCH MECHANICAL JOINT CONNECTION

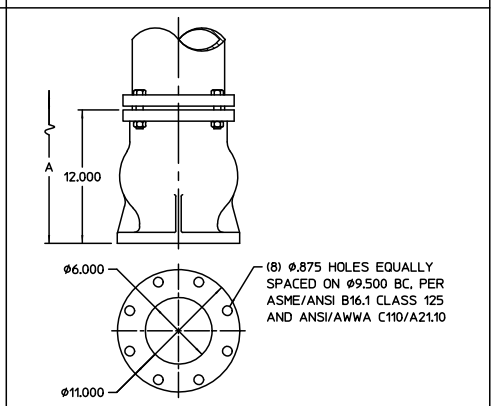

6 INCH FLANGED VERTICAL ENTRY CONNECTION

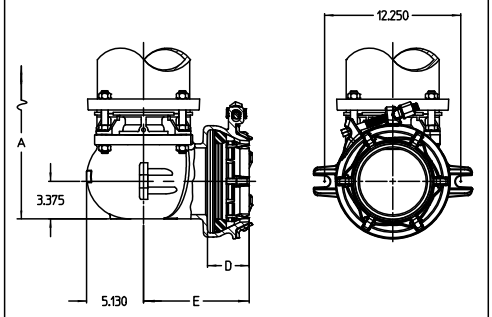

JOINT	D	E
ALPHA™	3.748	9.50
ALPHA™ XL	4.042	9.875

6" ALPHA™ AND ALPHA™ XL JOINT CONNECTION

IL1437-2A ALPHA™ is a trademark of Romac Industries, Inc. (U.S. Patent 8,894,100)

ALPHA restraint joints will accommodate the following pipe types and sizes:

ALPHA

- Ductile iron per AWWA C151
- PVC per ASTM D1785 (Schedule 40 and 80)
- PVC per ASTM D2241 (SDR 21)
- PVC per AWWA C900
- HDPE per AWWA C906 (SDR 9, 11, 13.5, and 17)

ALPHA XL

- Gray iron (Class A, B, C, and D)

Nominal Size (in)	ALPHA OD Range (in)	ALPHA XL OD Range (in)
6	6.60 - 7.00	6.90 - 7.10

NOTE: See Table 1 on Page 2B-3 for Dimension A.

5-1/4" WATEROUS PACER® - OPERATING NUT SIZES

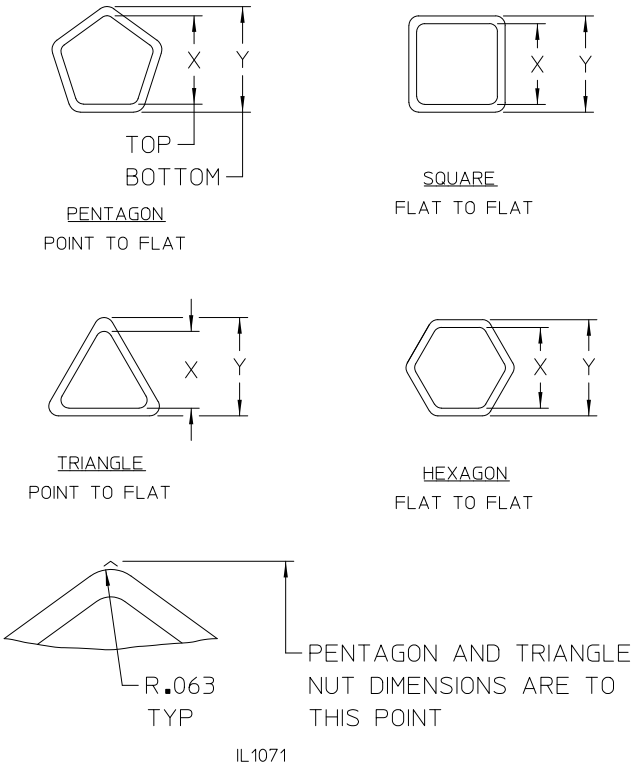

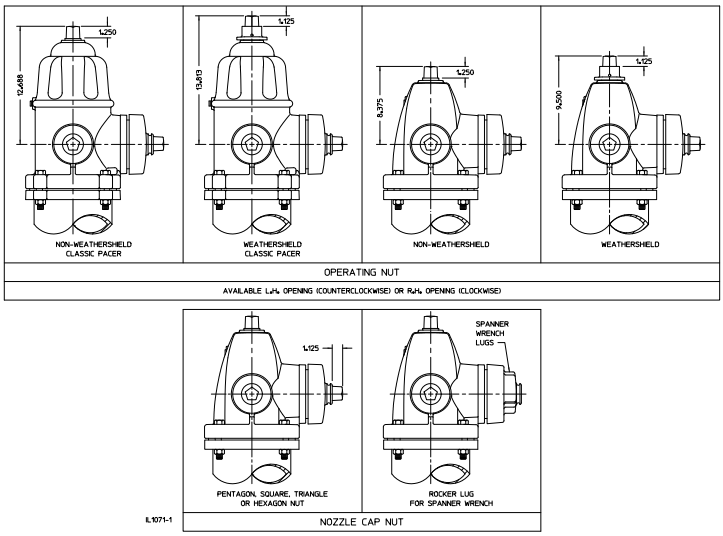

Nut Shape	Waterous Nut No.	Nominal Nut Size	X (Top)	Y (Bottom)
Pentagon	1	15/16	.866 / .835	.962 / .931
	2	1-1/8	1.059 / 1.028	1.155 / 1.124
	3	1-7/32	1.155 / 1.124	1.251 / 1.220
	3A	1-9/32	1.204 / 1.171	1.299 / 1.268
	4	1-5/16	1.251 / 1.220	1.348 / 1.317
	4A	1-3/8	1.309 / 1.278	1.406 / 1.375
	5	1-1/2	1.443 / 1.412	1.540 / 1.509
Square	6	7/8	.750 / .719	.875 / .844
	7	1	.875 / .844	1.000 / .969
Triangle	8	1-1/2	1/520 / 1.480	1.582 / 1.542
Pentagon	9	1-19/32	1.540 / 1.509	1.637 / 1.606
	*10	1-11/16	1.637 / 1.606	1.732 / 1.701
	*11	1-25/32	1.732 / 1.701	1.827 / 1.796
	*12	1-7/8	1.827 / 1.796	1.923 / 1.892
Square	13	1-1/8	1.000 / .969	1.125 / 1.094
	14	1-1/4	1.187 / 1.156	1.250 / 1.219
	*15	2	1.875 / 1.844	2.000 / 1.969
Hexagon	17	1-5/16	1.320 / 1.280	1.395 / 1.355
	17A	1-1/4	1.190	1.280
Square	19	15/16	.812 / .781	.937 / .906
Triangle	20	1-3/8	1.375 / 1.344	1.437 / 1.406
Square	*21	1-3/8	1.312 / 1.281	1.375 / 1.344
Hexagon	22	1-1/2	1.437 / 1.406	1.531 / 1.500
	22A	1-7/16	1.406 / 1.375	1.500 / 1.469
Square	*23	1-3/4	1.718 / 1.687	1.781 / 1.750
Rocker Lug	41	Rocker lug for spanner wrench (caps only)		

* NOTE: Operating nuts in these sizes are available only as weathershield type.

5-1/4" WATEROUS PACER® - WEIGHTS
With 6" Mechanical Joint Bottom (Less Accessories)

BURY DEPTH	WEIGHT (LBS)	
	NON-TRAFFIC MODEL W67-250	TRAFFIC MODEL WB67-250
FT - IN.	DDP	DDP
3-0	338	357
3-6	358	377
4-0	379	398
4-6	399	418
5-0	420	439
5-6	440	458
6-0	461	580
6-6	481	500
7-0	502	521
7-6	522	541
8-0	543	562
8-6	563	582
9-0	584	603
9-6	604	623
10-0	625	644

NOTES:

1. Deduct 11 lbs for DD (2 hose)
2. 16 in. Breakoff Section - Use weight for 6 in. longer hydrant
3. 22 in. Breakoff Section - Use weight for 12 in. longer hydrant
4. Add 11 lbs for 4 in. Mechanical Joint accessories
5. Add 17 lbs for 6 in. Mechanical Joint accessories
6. Add 12 lbs for Classic Pacer (DDP & PP)

5-1/4” WATEROUS PACER® - FRICTION LOSS CURVE

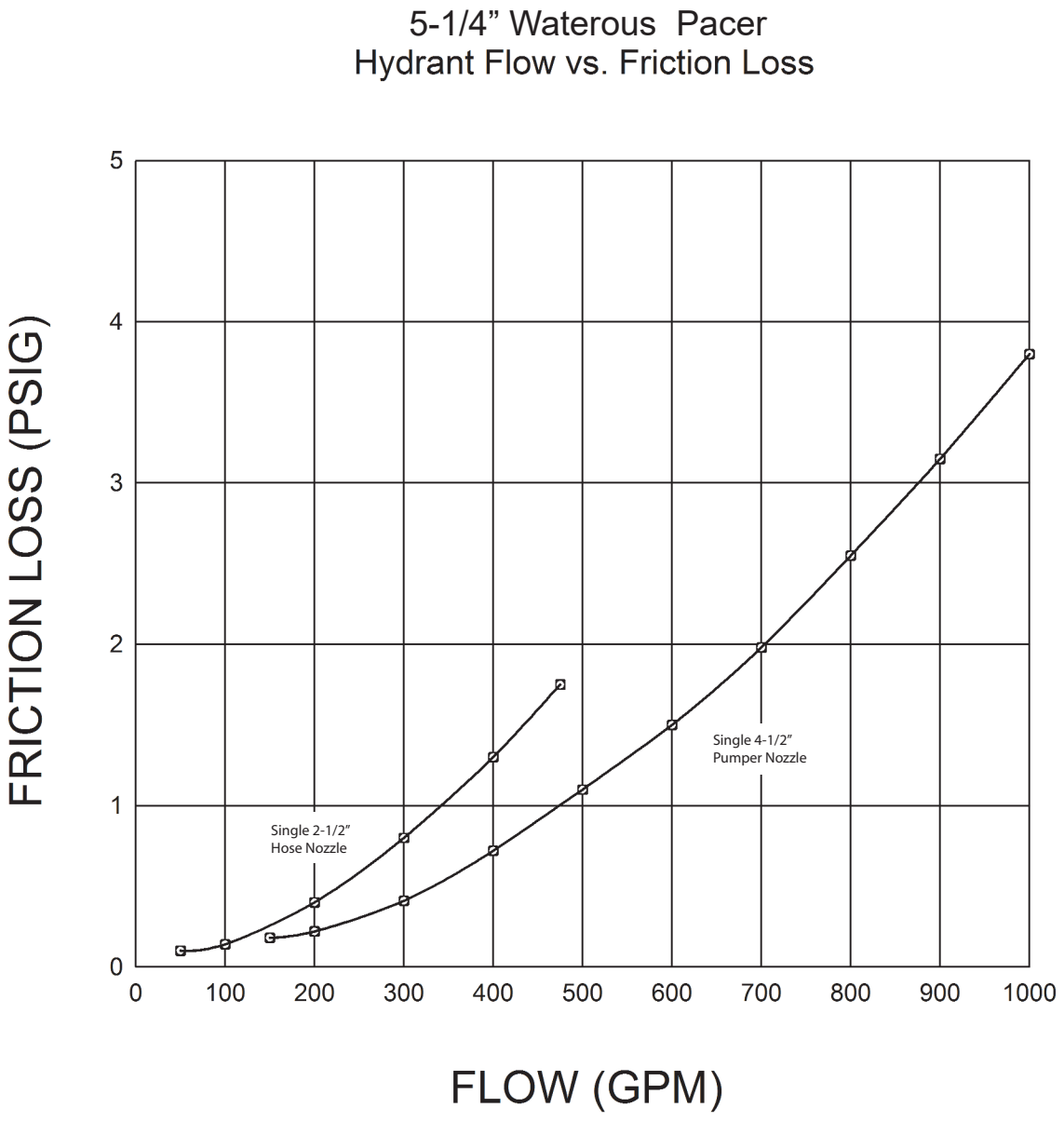

IL1073

AMERICAN Flow Control®
5-1/4" WATEROUS PACER® FIRE HYDRANT
SUBMITTAL SHEET

City Specfication:		**Quantity:**	
Style:	☐ Contemporary	☐ Classic	
Type:	☐ Traffic (Model WB67-250)	☐ Non-Traffic (Model W67-250)	
Direction to Open:	☐ Left (C.C.W.)	☐ Right (C.W.)	

Operating Nuts	**Operating Nut**		**Nozzle Cap Nuts**	
	☐ Non-Weathershield ☐ Weathershield		☐ Rocker Lug for Spanner Wrench or ☐ Same as Operating Nut	
	Nominal Size:	Shape:	Nominal Size:	Shape:
	Waterous No. (If Known)		Waterous No. (If Known)	

Nozzles	**Nozzle Configuration (Check One)**	**Pumper Nozzle**	**Hose or IHG Valve Nozzle**
	☐ DDP (Two Hose, One Pumper ☐ DDD (Three Hose) ☐ DD (Two Hose) ☐ PP (Two Pumpers) ☐ GGP (Two IHG Valves One Pumper) ☐ GG (Two IHG Valves)	Storz: ☐ 4 in. ☐ 5 in. Nat'l Std. ☐ Yes ☐ No	Nat'l Std: ☐ Yes ☐ No
		Size: Pitch Dia: O.D. x T.P.I.	Size: Pitch Dia: O.D. x T.P.I.
		Waterous Template (If Known):	Waterous Template (If Known):

Nozzle Cap Chains: ☐ Yes ☐ No	**Bury Depth:** (Depth of Trench)

Upper Standpipe Length: ☐ 10" ☐ 16" ☐ 22" ☐ 28" ☐ 34"

Bottom (Base) Connection: (Check One)

☐ 6" Flanged ☐ 6" MJ ☐ 6" TYTON® ☐ 6" Plain End with Integral MJ Gland

☐ 6" Flanged Vertical Entry ☐ 4" MJ ☐ 6" ALPHA™ ☐ 6" ALPHA™ XL

Paint Color:

UL Listed ☐ Yes ☐ No FM Approved ☐ Yes ☐ No

Other Requirements: (List)

Notes:
1. Meets or exceeds requirements of AWWA C502, latest revision.
2. 250 psig rated working pressure.
3. UL Listed and Approved by FM Approvals at 250 psig in allowable configurations.
4. Certified to NSF/ANSI Standard 61 and NSF/ANSI 372.
5. TYTON® is a registered trademark of United States Pipe and Foundry Co., LLC.
6. ALPHA™ is a trademark of Romac Industries, Inc. (U.S. Patent 8,894,100)

5-1/4" WATEROUS PACER® - INSTALLATION

This instruction is issued as a recommendation to the customer for the proper use of the AMERICAN Flow Control manufactured fire hydrants. AMERICAN recommends you follow the general Inspection and Installation guidelines outlined in AWWA Manual *M17 for Installation, Field Testing, and Maintenance of Fire Hydrants* and/or as recommended below. **WARNING: Special care should be taken in the installation, inspection and repair of pressure containing devices such as valves and hydrants. FAILURE TO FOLLOW PROPER PRACTICE AND GUIDELINES CAN RESULT IN SERIOUS INJURY OR DEATH. High pressure and water hammer, due to rapid opening or closing of a hydrant or valve, can also cause major damage to the hydrant, valve, water main, fire hose, or other attached equipment.**

Receiving Inspection

On receipt, inspect for direction of opening, correct nozzle threads and operating nuts, and shipping damage.

Report any problems to carrier; note on bill of lading and have the driver sign your copy.

Installation

1. When hydrants are received, they should be handled carefully to avoid breakage and damage to flanges. Keep hydrants closed until they are installed. Protect stored hydrants from the elements.
2. **Before installation of hydrant, clean piping, base and drain ring of hydrant of any rocks, sand and/or foreign material. Check for loose bolts at base, ground line and cover. Tighten if necessary.**
3. Hydrants shall be located as shown or as directed and in a manner to provide complete accessibility, and also in such a manner that the possibility of damage from vehicles or injury to pedestrians will be minimized. Locate hydrants as detailed in AWWA M17 and/or in accordance with applicable fire codes, the requirements of local fire authority, or the applicable municipal design standard.
4. All hydrants shall stand plumb and shall have their nozzles parallel with or at right angles to the curb, with the pumper nozzle facing the curb, except that hydrants having two hose nozzles 90° apart shall be set with each nozzle facing the curb at the angle of 45°. Hydrants shall be set to the established grade, with nozzles at least 18 inches above the ground, as shown or as directed by the engineer.
5. It is recommended practice to install an auxiliary or secondary gate valve in the lateral between the hydrant and the main to permit inspection and repair of the hydrant without shutting down mains. The use of AMERICAN Flow Control Series 2500 Resilient Wedge Gate Valves are recommended.
6. On traffic hydrants, surrounding soil must be adequately compacted around the standpipe to support the lower barrel against transferring the force of a vehicular impact to the base. If the soil is too sandy and will not support the loads, pour a concrete pad around the barrel at or near the ground line at least 6 inches thick and 36 inches in diameter for standpipe support.
7. Whenever a hydrant is set in soil that is pervious. drainage shall be provided at the base of the hydrant by placing coarse gravel or crushed stone mixed with coarse sand, from the bottom of the trench to at least 6 inches above the drain opening in the hydrant and to a distance of 1 foot around the elbow.
8. Whenever a hydrant is set in clay or other impervious soil, a drainage pit 2 feet in diameter and 3 feet deep shall be excavated below each hydrant and compactly filled with coarse gravel or crushed stone mixed with coarse sand under and around the elbow of the hydrant and to a level of 6 inches above the drain opening.
9. Where there is a high ground water level or other conditions that prevent the use of hydrants with drains, "non-draining" hydrants should be used. Hydrants of this type are provided with either a solid seat and/or plugged drains and are marked to pump after use. This is especially important to avoid damage to the hydrant in areas where freezing temperatures are likely. Non-draining hydrants should be checked upon installation and during semi-annual inspections to make sure the hydrant stays dry inside the lower and upper barrel.
10. Restrain hydrant movement with appropriate thrust blocking or restrained joint to prevent pipe and/or joint separation. If a concrete thrust block is installed, care should be taken to prevent blocking the hydrant drains if they are to remain operable.
11. When first installed, the hydrant should be operated from full closed to full open position and back to make sure no obstructions are present.
12. After the line, as well as the hydrant, have been hydrostatically tested, the hydrant should be flushed and checked for proper drainage, if applicable.

5-1/4" WATEROUS PACER® - INSTALLATION

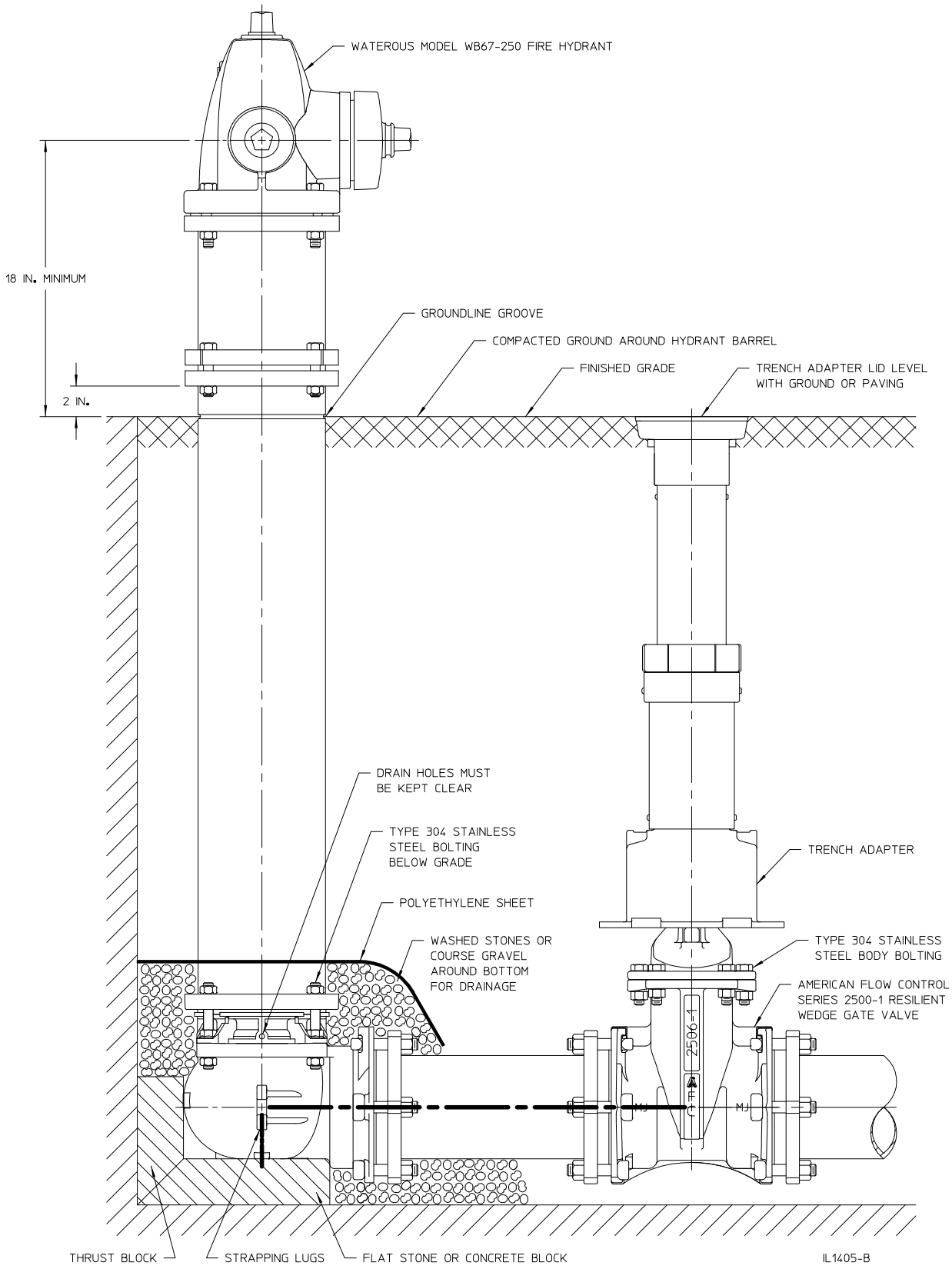

5-1/4" WATEROUS PACER® TESTING

AMERICAN Flow Control recommends you follow the General Inspection and Installation Guidelines outlined in AWWA Manual M17 for Installation, Field Testing, and Maintenance of Fire Hydrants and/or as recommended below. ANSI/AWWA C502 permits dry barrel hydrants with unplugged drain outlets to have an allowable leakage of 5 fluid oz/min (0.25 mL/s) through the drain valve. Therefore, the hydrant should not be opened at the same time that the water main is tested. The auxiliary valve should be closed during water main tests (see ANSI/AWWA C600). If it is necessary to test the hydrant and water main at the same time, the installer may elect to temporarily plug the drain outlets by installing a non-draining seat. **WARNING: Special care should be taken in the installation, inspection and repair of pressure containing devices such as valves and hydrants. FAILURE TO FOLLOW PROPER PRACTICE AND GUIDELINES CAN RESULT IN SERIOUS INJURY OR DEATH. High pressure and water hammer, due to rapid opening or closing of a hydrant or valve, can also cause major damage to the hydrant, valve, water main, fire hose, or other attached equipment.** After the hydrant is installed and, when possible, before backfilling (and after pressure testing the water main), the hydrant should be tested as follows:

Pressure Test at Main Pressure

WARNING: FAILURE TO RELIEVE PRESSURE CAN RESULT IN THE CAP BLOWING OFF, CAUSING INJURY OR DEATH.

1. Remove an outlet nozzle cap and open the hydrant valve enough turns to close the drain. Allow the hydrant to fill until the water level reaches bottom of the outlet nozzle.
2. Replace the outlet-nozzle cap and leave it loose to permit all air to escape.
3. After all air has escaped, tighten the outlet-nozzle cap.
4. Open the hydrant completely. (Opening the hydrant fully before all the air has escaped will compress the air and cause a safety hazard.)
5. Check for leakage at all joints and outlet nozzles.
6. If leakage is noted, repair or replace the necessary components or the entire hydrant using the instructions found in this publication.
7. Repeat the test until results are satisfactory.

Pressure Test at Pressures Above Main Pressure

WARNING: FAILURE TO RELIEVE PRESSURE CAN RESULT IN THE CAP BLOWING OFF, CAUSING INJURY OR DEATH.

1. Connect a pressure test pump to one of the hydrant's outlet nozzles.
2. Open an outlet nozzle cap. Open the hydrant valve a few turns. Allow the hydrant to fill until the water level is at the bottom of the outlet nozzle.
3. After all the air has escaped, tighten the outlet nozzle cap.
4. Open the hydrant completely.
5. Close the auxiliary valve.
6. Safely pump up to the test pressure but do not exceed the rated working pressure of the hydrant or system components.
7. Check for leakage at all joints and outlet nozzles.
8. Safely repair or replace hydrant, if necessary, using the instructions found in this publication.
9. Repeat the test until results are satisfactory.
10. Close the hydrant and relieve pressure. Open the auxiliary valve.

5-1/4" WATEROUS PACER® TESTING

Drainage Test for Dry Barrel Hydrants (Draining Type)

WARNING: FAILURE TO RELIEVE PRESSURE CAN RESULT IN THE CAP BLOWING OFF, CAUSING INJURY OR DEATH.

1. Following the pressure test, close the hydrant main valve.
2. Carefully remove one outlet nozzle cap and place the palm of one hand over the outlet nozzle opening.
3. Drainage should be sufficiently rapid to create a noticeable suction.
4. If the hydrant fails the drainage test, replace and tighten the nozzle cap, partially open the hydrant (1 or 2-turns) with the outlet nozzle caps on to create a pressure that will flush and clear the drain assembly. If this fails to restore proper drainage, then the drain assembly should be removed and inspected. If the drain assembly is clear, then the problem may be that the drain outlets are plugged from outside the hydrant. Repair will require digging down around the outside of the hydrant and clearing the drain outlets.

Placing a Hydrant Into Service

1. After testing and backfilling, the hydrant should be safely flushed and tested to be sure that it is bacteriologically safe before it is put into service.
2. Tighten the outlet nozzle caps so they will not be excessively tight, but tight enough to prevent their removal by hand.
3. Clean the hydrant exterior to remove dirt accumulated during installation. Touch up any areas where factory coating was damaged during handling or installation. Use an appropriate top coating or contact factory for touch-up coatings.

5-1/4" WATEROUS PACER OPERATION, INSPECTION, AND MAINTENANCE

Operation View Video

AMERICAN Flow Control recommends you follow the general Inspection and Installation guidelines outlined in AWWA Manual M17 for Installation, Field Testing, and Maintenance of Fire Hydrants and/or as recommended below. The thrust bearing hydrant requires a minimum of torque to operate. **WARNING: Special care should be taken in the installation, inspection and repair of pressure containing devices such as valves and hydrants. FAILURE TO FOLLOW PROPER PRACTICE AND GUIDELINES CAN RESULT IN SERIOUS INJURY OR DEATH. High pressure and water hammer, due to rapid opening or closing of a hydrant or valve, can also cause major damage to the hydrant, valve, water main, fire hose, or other attached equipment.** It is possible to damage the hydrant by forcing it beyond its limits of travel with excess torque; therefore:

1. Check direction of opening as marked on the nozzle section.
2. To open, turn the operating nut until the main valve is fully open and the travel stop nut limits further opening. **Do not force the hydrant in the opening direction beyond fully-open as indicated by sudden resistance to turning**. If water does not flow when the hydrant is open, it is probably due to a closed valve upstream from the hydrant. Always open the hydrant completely, never only partially. A hydrant that is partially open will allow pressurized flow through the drain valve, which may wash away the soil from the area surrounding the base, or the partially open main valve may trap small stones or other debris between the valve seal and seat.
3. To close, turn the operating nut until the valve stops the flow. **It is not necessary to close this style of hydrant with great force.** Once the flow has stopped, turn the operating nut in the opening direction about 1/4 turn to take the strain off the operating parts of the hydrant. If the hydrant does not shut off completely, do not attempt to force the hydrant to close. Debris and small stones may be trapped in the valve seat and may be preventing the hydrant from closing. Partially open and close the hydrant several times to help dislodge the debris. If this does not work, safely remove the hydrant operating rod assembly, remove the debris and repair as detailed in subsequent sections of this manual.
4. **WARNING: FAILURE TO RELIEVE PRESSURE CAN RESULT IN THE CAP BLOWING OFF, CAUSING INJURY OR DEATH.** Make sure the auxiliary gate valve in the lateral between the main and the hydrant is closed and that the hydrant is not charged with pressure when removing caps.

Inspection

1. It is recommended that hydrants be inspected twice per year to ensure their satisfactory operation. After each use (especially in cold weather) hydrants should be specifically inspected for drainage.
2. Routine inspection should cover the points outlined in AWWA Manual M17 and include (but not be limited to) the following points:
   a. External inspection of paint, caps, chains, etc.
   b. Checking traffic type hydrants for damage to the breakaway feature.
   c. Using a listening device to check the main valve for leakage.
   d. Statically testing the hydrant to look for leakage at gaskets, caps, O-rings and drains.
   e. Verifying the hydrant drains properly.
   f. Cycling the hydrant from full open to full close.
   g. Check for routine lubrication needs which includes but may not be limited to loss of lubricant, nozzle caps and operating mechanism.
3. At time of inspection, flush the hydrant to remove any foreign material from the hydrant and the lateral. If necessary, flush the drains by filling the hydrant and then cycling open the main valve two times to force water out of the drains under pressure. If the hydrant is non-draining type, pump water out after flushing.

MAINTENANCE View Video

AMERICAN Flow Control strongly recommends that you follow routine maintenance on fire hydrants as outlined in AWWA Manual *M17 for Installation, Field Testing, and Maintenance of Fire Hydrants.* The ease of operation and the frequency of repair depends on the condition of the water system and the maintenance given. Dirt, gravel and other foreign material in the hydrant may prevent it from closing or draining properly, which may result in damage to the hydrant main valve. Under most operating conditions, AMERICAN Flow Control recommends semi-annual lubrication and inspection of fire hydrants. Where grease is specified, use an AMERICAN Flow Control recommended food grade grease.

1. Twice per year, open the hydrant completely and flush for several minutes. Open and close valve to make sure it works properly, and check for leaks.
2. Remove a cap and verify that the hydrant is draining properly. After the main valve is closed, the water in the hydrant should drain rapidly. If it does not, the drain ports may be clogged. To clear drain ports, install nozzle cap, and tighten until water tight, then open hydrant two or three turns for several minutes. This will leave drain port partially open and permit water pressure to wash out the obstruction. If this method is unsuccessful, remove the operating rod assembly and clean the drain mechanism. If neither of above methods permits water to drain, it indicates that the drainage area around the hydrant base should be rebuilt.
3. **Oil Reservoir Hydrants:**

   Remove oil level plug and check oil level. The oil level should be to the level of the plug. If it is necessary to add oil, remove the oil level plug on the back of the nozzle section and add oil.
4. **Non-Oil Reservoir Hydrants:**

   Remove screw from operating nut, and add approximately one tablespoon of oil through opening. Replace screw.
5. Remove all nozzle caps, clean rust or corrosion from threads of nozzles and caps, and replace cap gaskets if necessary. Apply a light coat of grease to nozzle threads before replacing cap.

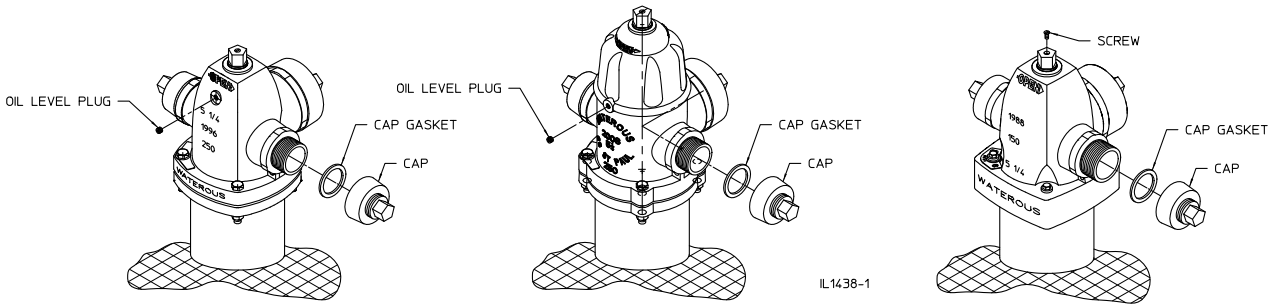

Note: Where oil or grease is specified, use an AMERICAN Flow Control recommended food grade lubricant.

5-1/4" WATEROUS PACER® - TROUBLESHOOTING GUIDE

WARNING: Special care should be taken in the installation, inspection and repair of pressure containing devices such as valves and hydrants. FAILURE TO FOLLOW PROPER PRACTICE AND GUIDELINES CAN RESULT IN SERIOUS INJURY OR DEATH. High pressure and water hammer, due to rapid opening or closing of a hydrant or valve, can also cause major damage to the hydrant, valve, water main, fire hose, or other attached equipment.

Problem	Solution
1. Operating nut turns freely but hydrant does not open.	1. Inspect rod coupling for breakage and ensure rod pin is properly installed.
2. Hydrant will not shut off or ground around hydrant is highly saturated.	2. Close hydrant and remove nozzle cap. Check with listening device to determine if water is passing by main valve. If it is determined that the main valve is leaking, try the following: a. Flush hydrant in fully open position (watch to see if rocks or other foreign objects flush out of the barrel). b. After flushing for several minutes, shut off the hydrant. Watch for several minutes to see if flow stops. Place hand over open hose nozzle; suction should be felt, indicating hydrant is no longer leaking and drains are working properly. c. If flushing does not solve the problem, it would indicate that something is trapped or has cut the main valve rubber. Follow the seat removing instructions to replace the valve. Check threads on bronze seat to be sure that is not damaged. If threads appear worn or bent, replace the bronze seat. d. If replacing the valve does not stop the leakage, bolting at the hydrant shoe may be loose or the base gasket is damaged. The hydrant must be excavated to make the repair.
3. External leakage is noticed around the operating nut.	3. This indicates that O-rings are cut or missing. Replace o-rings as referenced in the disassembly and repair instructions.
4. Operating nut is extremely hard to turn.	4. Try to turn the operating nut. If the nut turns, carefully turn the nut back from a tight closed position until it turns freely. If it is necessary to add lubricant, for hydrants with an oil reservoir, remove the oil level plug on the back of the nozzle section and add oil. Fill oil to the level of the plug, if necessary. For hydrants with no oil reservoir, remove the flat head screw on the operating nut and add mineral oil or similar lubricant. ALWAYS FULLY OPEN AND CLOSE THE HYDRANT AFTER LUBRICATING. Replace the oil level plug or the flat head screw taking care to replace the thread sealant. The hydrant should cycle freely. If this does not solve the problem, remove the operating nut. Inspect the threads of the operating nut and upper rod. Inspect the thrust washer to ensure it is lubricated and is undamaged. Replace and/or lubricate the thrust washer if neces-sary. If this does not solve the problem, remove the hydrant seat and flush thoroughly. Note: **Where grease is specified, use an AMERICAN Flow Control recommended food grade grease**
5. Water is dripping around nozzles.	5. Close hydrant and remove nozzle cap. Replace cap gasket. Check the nozzle to be sure it is properly installed. Earlier model hydrants used caulked nozzles. Nozzle may require re-cauking or replacement of barrel. If nozzle has an O-ring behind the nozzle, it may need replacing.
6. Hydrant will not drain properly.	6. Check to be sure the water table has not risen too high to allow for drainage. Flush hydrant to be sure drains are clear. Open hydrant slowly several turns while leaving caps firmly in place to ensure hydrant drains are clear. Close hydrant and repeat this procedure. Do this slowly several times. If this does not solve the problem, remove the hydrant seat assembly and check the rubber drain facings. If no problems are found, excavate the hydrant to see if concrete or other materials have blocked the drain outlets.

5-1/4" WATEROUS PACER® – IDENTIFYING VARIATIONS / REPAIR KITS

150 PSIG Working Pressure Gray Iron Pacer (Models W67 and WB67 built from 1967 to 1998)

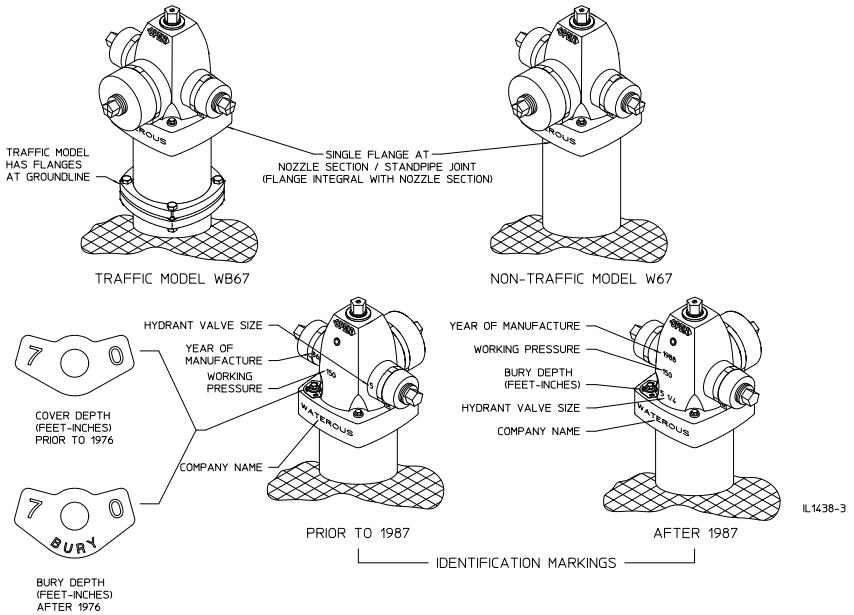

250 PSIG Working Pressure Ductile Iron Pacer (Models W67-250 and WB67-250 built from 1996 to present)

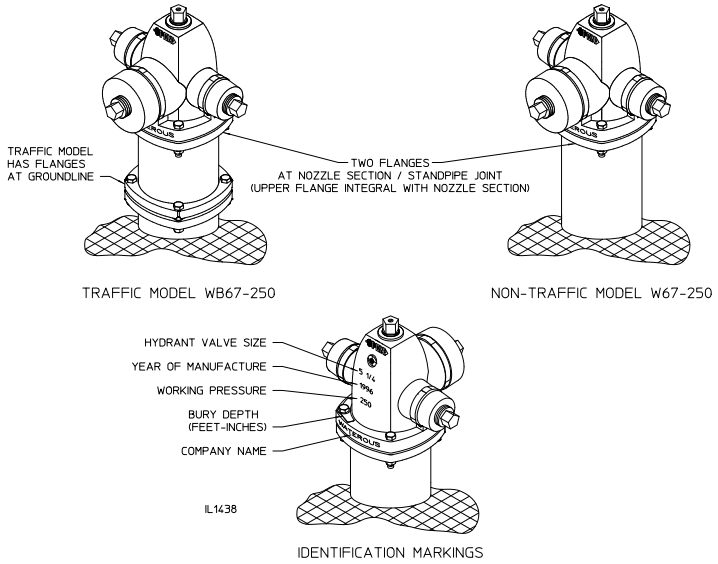

250 PSIG Working Pressure Ductile Iron Classic Pacer (Models W67-250 and WB67-250 built from 2009 to present)

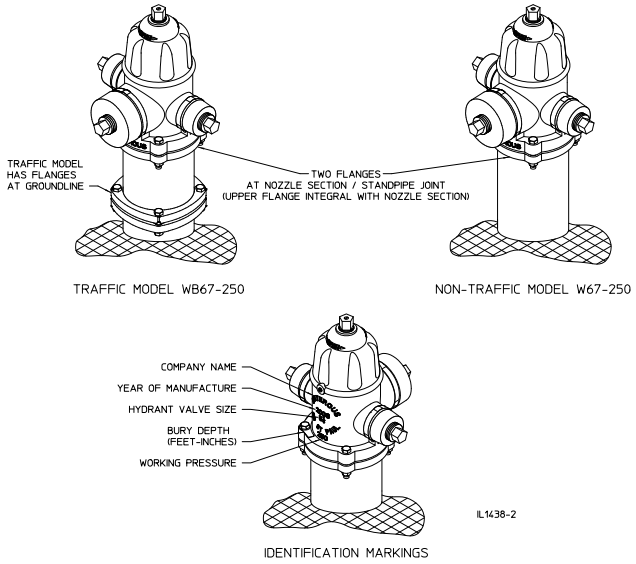

Repair Parts

To assure prompt delivery and shipment of the correct parts, furnish the following information with each repair parts order.

1. Date of manufacture or purchase of hydrant.
2. Working pressure of hydrant, 150 or 250 psig.
3. Depth of bury (hydrants dated 1976 and later); or depth of cover (hydrants dated prior to 1976).

   NOTE: Depth is shown on bury depth plate. Bury depth plates are embossed with the depth and the word "BURY"; cover depth plates show only the depth.

4. Hydrant opening direction.
5. Check original order to see if any special parts are required. For replacement nozzles, caps, and operating nuts, be sure to furnish thread data and size and shape of nut.
6. Whether hydrant is traffic model or non-traffic model.
7. For each part ordered, give reference number and description as found on the following parts lists.

   NOTE: Kits are available for making most repairs or extending the hydrant.

Parts List - 250 PSIG Rated Ductile Iron 5-1/4" Waterous Pacer®

Traffic Model WB67-250 and Non-Traffic Model W67-250

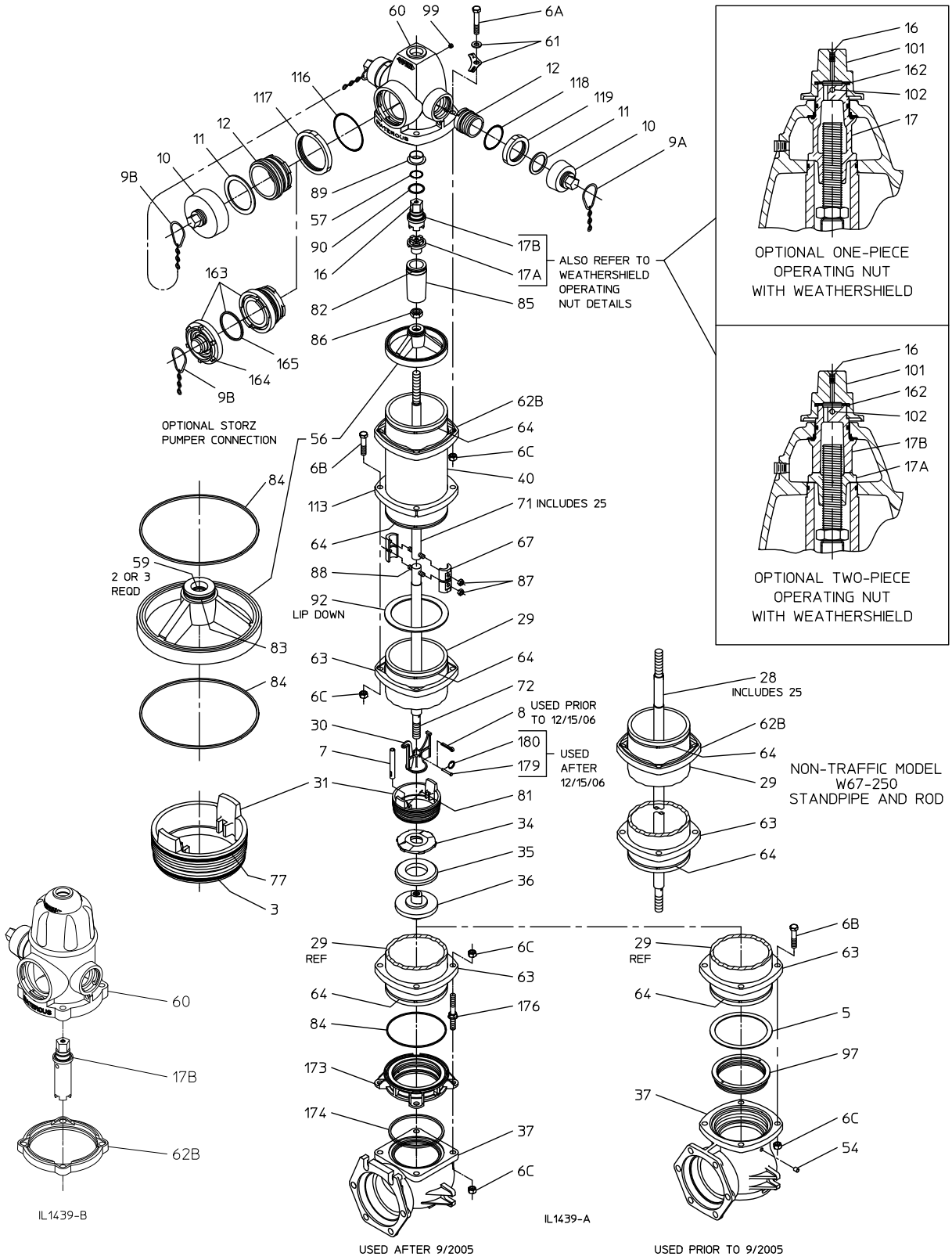

Parts List - 250 PSIG Rated Ductile Iron 5-1/4" Waterous Pacer®
Traffic Model WB67-250 and Non-Traffic Model W67-250

Traffic Model WB77-1

REF NO.	DESCRIPTION	MATERIAL
3	O-ring (Lower valve seat), 5-5/8 x 6-3/64	Buna-N
5	Lower standpipe gasket	Neoprene
6A	Hex hd bolt, 5/8-11 x 3-3/4 in.	Plated steel
6B	Hex hd bolt, 5/8-11 x 3 in.	Plated steel
6C	Hex nut, 5/8-11 (Above grade)	Plated steel
6C	Hex nut, 5/8-11 (Below grade)	Stainless steel
7	Drain plunger	Red brass
8	Cotter pin, 1/4 x 1-1/2 in.	Stainless steel
9A, 9B	Nozzle cap chain, single or double	Plated steel
10	Nozzle cap, hose or pumper	Ductile iron
11	Cap gasket, hose or pumper	Neoprene
12	Nozzle, hose or pumper	Brass
16	Flat hd screw, 1/4-20 x 1/2 in.	Stainless steel
17	Operating nut (one-piece)	Bronze
17A	Lower operating nut	Bronze
17B	Upper operating nut	Ductile iron**
25	Rod bushing	Red brass
28	Rod (Non-Traffic model)	Steel rod
29	Lower standpipe (Traffic-model)	Centrifugally cast ductile iron pipe*
29	Standpipe (Non-traffic model)	Centrifugally cast ductile iron pipe*
30	Crossarm	Bronze
31	Valve seat	Bronze
34	Upper valve washer	Ductile iron
35	Main valve rubber	Urethane
36	Lower valve washer	Ductile iron
37	Hydrant bottom	Ductile iron
40	Upper standpipe (Traffic model)	Centrifugally cast ductile iron pipe*
54	Drain bushing	Brass
56	Support wheel	Ductile iron
57	O-ring (Operating nut), 1-1/2 x 1-3/4	Buna-N
59	O-ring (Support wheel), 1-1/8 x 1-3/8	Buna-N
60	Nozzle section	Ductile iron
61	Bury depth plate	Aluminum
61	Bury depth plate washer	Plated steel
62B	Upper standpipe flange	Ductile iron
63	Standpipe flange	Ductile iron
64	Flange lock ring	Stainless steel
67	Coupling sleeve (two-halves)	Gray iron
71	Upper rod	Steel rod
72	Lower rod	Steel rod
77	O-ring (Upper valve seat), 5-7/8 x 6-1/4	Buna-N
81	Groove pin, 3/32 x 7/16 in.	Beryllium copper
82	O-ring (Upper tube seal), 2-3/8 x 2-5/8	Buna-N
83	O-ring (Lower tube seal), 1-7/8 x 2-1/8	Buna-N
84	Support wheel / Lower standpipe gasket	Buna-N
85	Support tube	Ductile iron
86	Stop nut, 1"- 8	Plated steel
87	Coupling nut, 1/2-20	Brass
88	Coupling stud, 1/2-20 x 2-9/16 in.	Stainless steel
89	Nozzle section bushing	Brass
90	Thrust ring	Polymer bearing
92	Upper standpipe gasket	Neoprene
97	Valve seat insert	Bronze
99	Pipe plug, 1/4 NPT	Brass
101	Weathershield nut	Ductile iron
102	Spirol pin, hvy, 1/4 x 2-1/4 in.	Stainless steel
113	Breakable flange	Ductile iron
116	O-ring (Pumper nozzle), 5-1/4 x 5-3/4	Buna-N
117	Pumper nozzle retainer	Ductile iron
118	O-ring (Hose nozzle), 3-1/4 x 3-5/8	Buna-N
119	Hoze nozzle retainer	Ductile iron
162	Weathershield nut gasket	Nitrile
163	Nozzle, pumper, Storz (with cap and gasket)	Bronze and Aluminum
164	Nozzle cap, pumper, Storz	Aluminum
165	Cap gasket, pumper, Storz	Buna-N
173	Valve seat insert	Bronze
174	Valve seat insert gasket	Nitrile
176	Stud, 5/8-11 x 5.650 in.	Stainless steel
179	Clevis pin, 1/4 x 1-11/16 in.	Stainless steel
180	Kickout ring	Stainless steel

*AWWA Standard C151 (ANSI A21.51)
**Bronze is optional on some nut sizes

Parts List - 150 PSIG Rated Gray Iron 5-1/4" Waterous Pacer®

Traffic Model WB67 and Non-Traffic Model W67

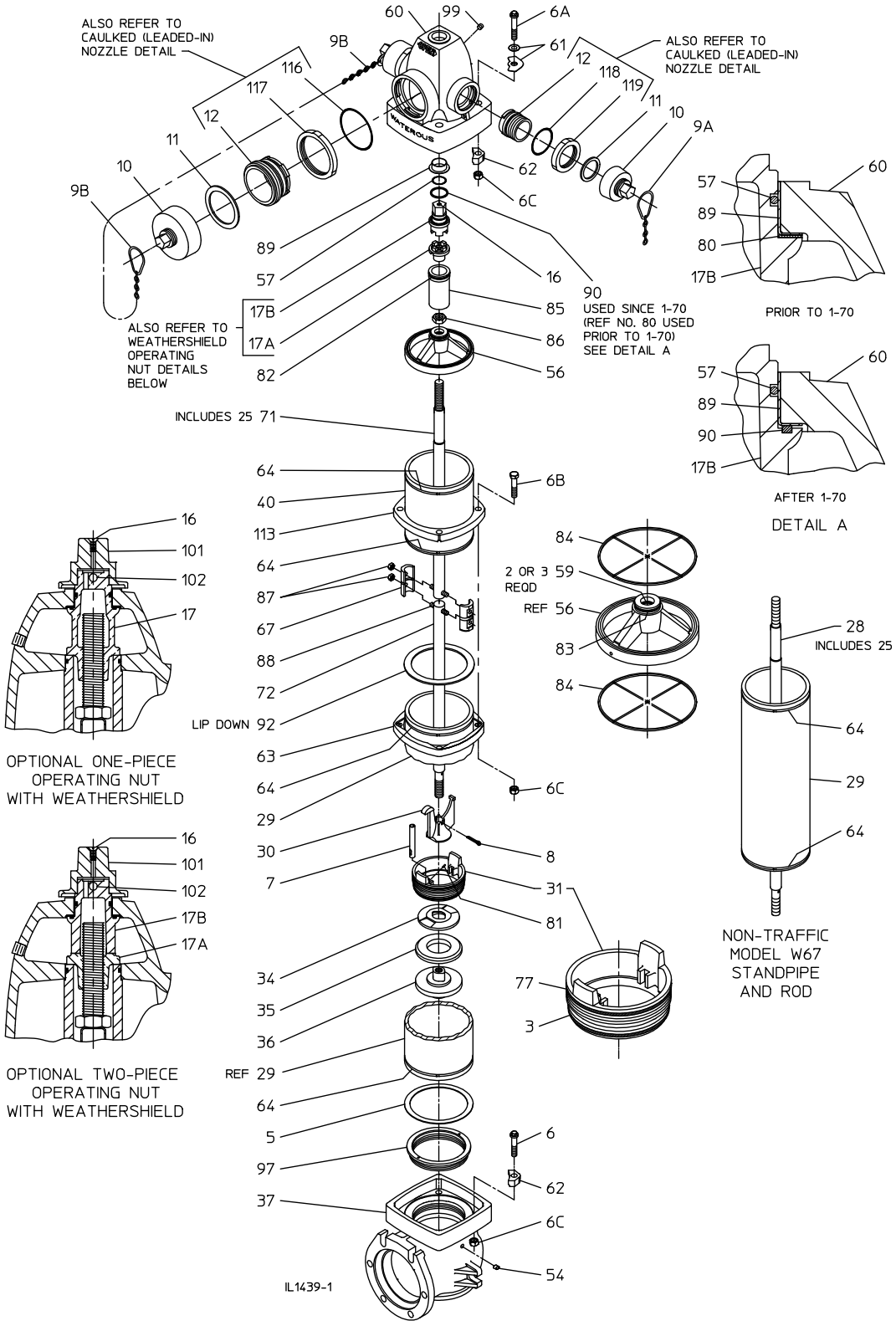

Parts List - 150 PSIG Rated Gray Iron 5-1/4" Waterous Pacer®

Traffic Model WB67 and Non-Traffic Model W67

REF NO.	DESCRIPTION	MATERIAL
3	O-ring (Lower valve seat), 5-5/8 x 6-3/64	Buna-N
5	Lower standpipe gasket	Neoprene
6	Hex hd bolt, 5/8-11 x 3 in.	Plated steel
6A	Hex hd bolt, 5/8-11 x 3-3/4 in.	Plated steel
6B	Hex hd bolt, 5/8-11 x 3 in.	Plated steel
6C	Hex nut, 5/8-11	Plated steel
7	Drain plunger	Red brass
8	Cotter pin, 1/4 x 1-1/2 in.	Stainless steel
9A, 9B	Nozzle cap chain, single or double	Plated steel
10	Nozzle cap, hose or pumper***	Gray iron
11	Cap gasket, hose or pumper	Neoprene
12	Nozzle, hose or pumper	Brass
16	Flat hd screw, 1/4-20 x 1/2 in.	Stainless steel
17	Operating nut (one-piece)	Bronze
17A	Lower operating nut	Bronze
17B	Upper operating nut***	Gray iron**
25	Rod bushing	Red brass
28	Rod (non-Traffic model)	Steel rod
29	Lower standpipe (Traffic model)	Centrifugally cast ductile iron pipe*
29	Standpipe (non-Traffic model)	Centrifugally cast ductile iron pipe*
30	Crossarm	Ductile iron
31	Valve seat	Bronze
34	Upper valve washer***	Gray iron
35	Main valve rubber	Nitrile
36	Lower valve washer***	Gray iron
37	Hydrant bottom***	Gray iron
40	Upper standpipe (Traffic model)	Centrifugally cast ductile iron pipe*
54	Drain bushing	Brass
56	Support wheel***	Gray iron
57	O-ring (Operating nut), 1-1/2 x 1-3/4	Buna-N
59	O-ring (Support wheel), 1-1/8 x 1-3/8	Buna-N
60	Nozzle section***	Gray iron
61	Bury depth plate	Aluminum
61	Bury depth plate washer	Plated steel
62	Lock ring clamp	Malleable iron
63	Standpipe flange	Ductile iron
64	Flange lock ring	Stainless steel
67	Coupling sleeve (2 halves)	Gray iron
71	Upper rod (Traffic model)	Steel rod
72	Lower rod (Traffic model)	Steel rod
77	O-ring (Upper valve seat), 5-7/8 x 6-1/4	Buna-N
80	Thrust washer (Used until Jan., 1970)	Teflon
81	Groove pin, 3/32 x 7/16 in.	Beryllium copper
82	O-ring (Upper tube seal), 2-3/8 x 2-5/8	Buna-N
83	O-ring (Lower tube seal), 1-7/8 x 2-1/8	Buna-N
84	Support wheel gasket	Buna-N
85	Support tube***	Gray iron
86	Stop nut, 1"- 8	Plated steel
87	Coupling nut, 1/2-20	Brass
88	Coupling stud, 1/2-20 x 2-9/16 in.	Stainless steel
89	Nozzle section bushing	Brass
90	Thrust ring (Used starting Jan., 1970)	Teflon
92	Upper standpipe gasket	Neoprene
97	Valve seat insert	Bronze
99	Pipe plug, 1/4 NPT	Brass
101	Weathershield nut	Ductile iron
102	Groove pin, 1/4 x 2 in.	Stainless steel
113	Breakable flange	Ductile iron
116	O-ring (Pumper nozzle), 5-1/4 x 5-3/4	Buna-N
117	Pumper nozzle retainer	Ductile iron
118	O-ring, (Hose nozzle), 3-1/4 x 3-5/8	Buna-N
119	Hose Nozzle Retainer	Ductile iron

*AWWA Standard C151 (ANSI 21.51)
**Bronze or ductile iron optional on some nut sizes.
***Ductile Iron components will be furnished in place of gray iron components when these items are ordered for repairs

5-1/4" WATEROUS PACER® - REPAIR INSTRUCTIONS

Disassembling the Hydrant

View Video

WARNING: Special care should be taken in the installation, inspection and repair of pressure containing devices such as valves and hydrants. FAILURE TO FOLLOW PROPER PRACTICE AND GUIDELINES CAN RESULT IN SERIOUS INJURY OR DEATH. High pressure and water hammer, due to rapid opening or closing of a hydrant or valve, can also cause major damage to the hydrant, valve, water main, fire hose, or other attached equipment.

1. **Shut off water line leading to hydrant making sure the hydrant is not under pressure. FAILURE TO FOLLOW PROPER PRACTICE AND GUIDELINES CAN RESULT IN SERIOUS INJURY OR DEATH.** Partially open hydrant valve to relieve trapped pressure. Standing to the side of the hydrant and away from the direction of the hydrant cap(s), loosen one of the hose caps to relieve any pressure that may be present in the hydrant barrel.

250 P.S.I.G. Rated Pacers (See Figure 1, Page 2B-22)

2a. At the nozzle section, remove bolts (6A), nuts (6C), and allow flange (62B) to slide down the upper stand pipe. Depth plate and washer (61) will come off with bolts.

150 P.S.I.G. Rated Pacers (See Figure 2, Page 2B-22)

2b. At the nozzle section, remove bolts (6A), nuts (6C) and clamps (62) from underneath flange of the nozzle section (60). Depth plate and plain washer (61) will come off with bolts.

NOTE: If clamps (62) should stick underneath the flange of the nozzle section (60), it may be necessary to carefully drive them out.

3. Turn upper operating nut (17B) or weathershield nut (101) in the opening direction to separate the nozzle section (60) and the support (56). Remove the nozzle section. **Caution, use proper lifting and handling techniques to avoid injury.**

4. Remove operating nut (17B or 17) from the nozzle section (60). (On hydrants with weathershield, it is necessary to drive out pin (102) and remove weathershield (101) before upper operating nut can be removed.)

NOTE: Bushing (89) is cemented in nozzle section (60). Removing it is not necessary unless it is damaged. To replace the bushing, follow instructions on page 2B-24.

5. Unscrew lower operating nut (17A - two-piece nuts, 17 - one-piece nut), and remove support tube (85).

6. Unscrew hex stop nut (86) from operating rod (28 or 71), and remove support (56).

7. Carefully lower disassembly wrench into stand pipe over operating rod, and engage lugs of valve seat (31). See Figure 3 on Page 2B-23.

Do not drop disassembly wrench into hydrant; it may damage valve seat and related parts.

8. Insert a three or four foot heavy steel bar (approximately 1 inch diameter) through eye of wrench, and turn in a counterclockwise direction to remove complete operating rod and valve assembly.

9. When valve seat (31) is clear of threads in hydrant bottom (37), remove disassembly wrench and lift out operating rod assembly.

10. To disassemble lower portion of operating rod, remove cotter pin (8) or clevis pin (179) and kickout ring (180). Hold rod (28 or 72) with a pipe wrench or in a vise, and unscrew lower washer (36) with a 1-9/16 end wrench or suitable adjustable wrench. (Main valve (35), upper washer (34), valve seat (31), and cross arm (30) will come off with lower washer.) Slide drain plunger (7) from valve seat. Remove O-rings (3 and 77). Do not remove groove pin (81), which guides drain plunger, unless it is damaged. See Figure 4 on Page 2B-23.

Traffic Models Only

11. Disassemble breakable coupling, unscrew nuts (87), and remove rod coupling halves (67) which join upper rod (71) to lower rod (72). Do not remove studs (88) unless they are damaged. (Breakable coupling disassembly is usually not necessary unless coupling parts are damaged.)

NOTE: When a supply of gaskets and O-rings are available, always install new ones when reassembling the hydrant. Clean dirt from O-ring grooves.

Reassembling the Hydrant

View Video

WARNING: Special care should be taken in the installation, inspection and repair of pressure containing devices such as valves and hydrants. FAILURE TO FOLLOW PROPER PRACTICE AND GUIDELINES CAN RESULT IN SERIOUS INJURY OR DEATH. High pressure and water hammer, due to rapid opening or closing of a hydrant or valve, can also cause major damage to the hydrant, valve, water main, fire hose, or other attached equipment.

Note: Where grease is specified, use an AMERICAN Flow Control recommended food grade grease

1. **Traffic Models Only**: Assemble breakable coupling. Slide rod coupling halves (67) onto the studs (88) in the upper and lower rods (71, 72) and install coupling nuts (87).
2. If necessary, install new groove pin (81) in valve seat (31). Slide drain plunger (7) into seat with oblong hole at lower end. Grease O-ring grooves in valve seat and install O-rings (3 and 77). Be sure to remove any twists.
3. Slide crossarm (30) and valve seat (31) on operating rod (28 or 72). Position main valve (35) and upper washer (34) on lower washer (36). Screw lower washer onto rod, engaging diamond boss on lower washer in matching recess in crossarm. Position valve seal against valve seat (35) and tighten lower washer to at least 65 ft-lbs. Tighten enough to permit installation of the clevis pin (179) and kickout ring (180).
4. Coat threads of valve seat (31) with grease. Carefully lower assembled operating rod into standpipe until valve seat rests on threads in hydrant bottom. Grasping rod (28 or 71) firmly with both hands, slowly turn in a counterclockwise direction until threads engage, then turn clockwise until it is hand tight.
5. Slowly lower disassembly wrench over operating rod (28 or 71) in standpipe, and engage it with valve seat (31). Insert a 3 ft. or 4 ft. foot heavy steel bar through eye of wrench and tighten valve seat securely in hydrant bottom. Remove wrench. Do not exceed 200 ft-lbs of torque (50 lb pull on the end of a 4 ft bar). One person using a bar 3 to 4 ft. long can easily exert enough force to tighten valve seat. Further tightening may make future seat removal more difficult.
6. Pull rod up as far as it will go (main valve will now be closed.) Hold in this position while an assistant slowly turns on the water.

   WARNING: To prevent serious personal injury, do not stand over rod when assistant turns on the water.
7. Visually check for possible leaks before proceeding with the next step.
8. Grease O-ring and gasket grooves in support (56), and install O-rings (59), gaskets (84) and lower tube seal (83). Tape threads of operating rod (28 or 71) to protect O-rings, and install support. Remove tape from threads.
9. Install hex stop nut (86), turning it down to end of thread. Snug up with a torque of 30 ft-lbs (30 lb at end of 12 inch. wrench).
10. Grease groove in upper end of support tube (85), and install upper tube seal (82). Slide tube down over operating rod (28 or 71) until it is seated on support (56).
11. Grease threads of operating rod (28 or 71) and lower bearing surface of operating nut (17A or 17). Screw lower operating nut onto rod while centering support (56) on the standpipe. Tighten operating nut (17A or 17) to securely clamp support (56) against upper standpipe (40). Be sure support (56) is centered on upper standpipe (40).
12. Grease and install thrust ring (90) and O-ring (57) in operating nut (17B or 17). If hydrant has a two-piece operating nut, set upper operating nut (17B) on lower operating nut (17A) and engage lugs in slots.

250 PSIG Rated Pacers (See Figure 1, Page 2B-22)

13a. Carefully lower nozzle section (60) over operating nut (17b or 17) until it seats on support (56). Rotate nozzle section (60) to desired position. Install bolts (6A) and nuts (6C) through flange of nozzle section and standpipe flange (62B) and tighten finger tight. Be sure to install depth plate and washers (61) in proper position. Make sure flange (62B) is seated properly up under flange, and tighten all bolts and nuts evenly. Tighten to 60-70 ft-lbs of torque.

150 PSIG Rated Pacers (See Figure 2, Page 2B-22)

13b. Make sure lock ring (64) is properly installed in stand pipe (29) or upper standpipe (40). Carefully lower nozzle section (60) over upper operating nut (17B or 17) until it seats on support (56). Rotate nozzle section (60) to desired position. Install clamps (62), bolts (6A) and nuts (6C) in flange of nozzle section and tighten finger tight. Be sure to install depth plate and washers (61) in proper position. Make sure all clamps are seated properly up under flange, and tighten all bolts and nuts evenly. Tighten to 60-70 ft-lbs of torque.

14. Back off operating nut slightly to release tension on operating rod. Since water pressure will hold valve up against seat, it is not necessary to turn operating nut to a dead stop if the valve and seat are in good condition.
15. Lubricate hydrant per "Lubrication" portion of the "Maintenance" section.

5-1/4” WATEROUS PACER® - REPAIR INSTRUCTIONS

Figure 1. Repair Diagram - 250 PSIG Rated Pacers

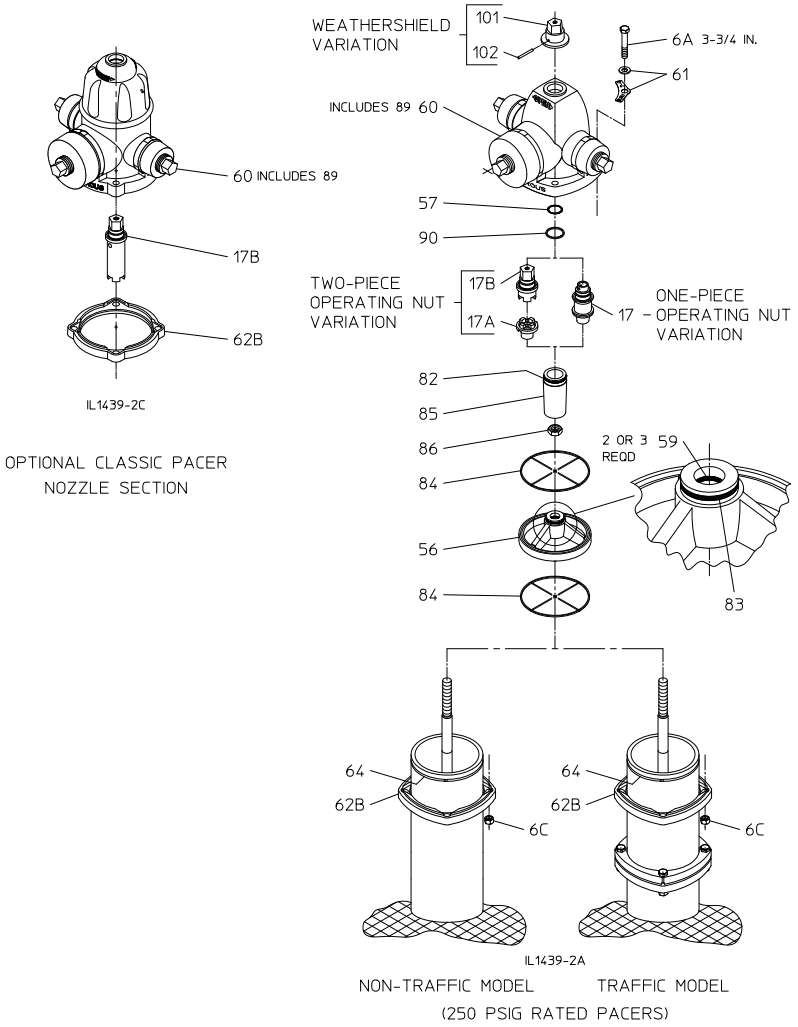

Figure 2. Repair Diagram - 150 PSIG Rated Pacers

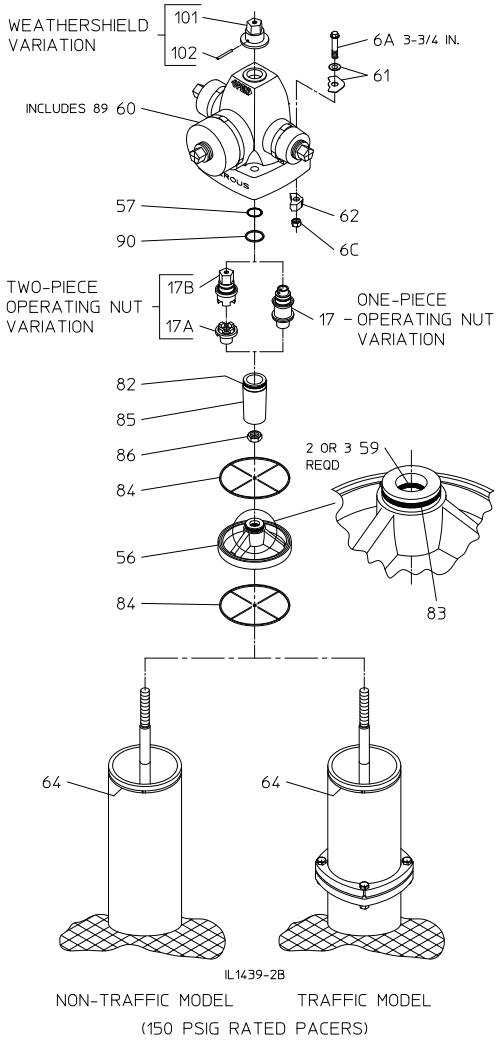

Figure 3. Rod Removal

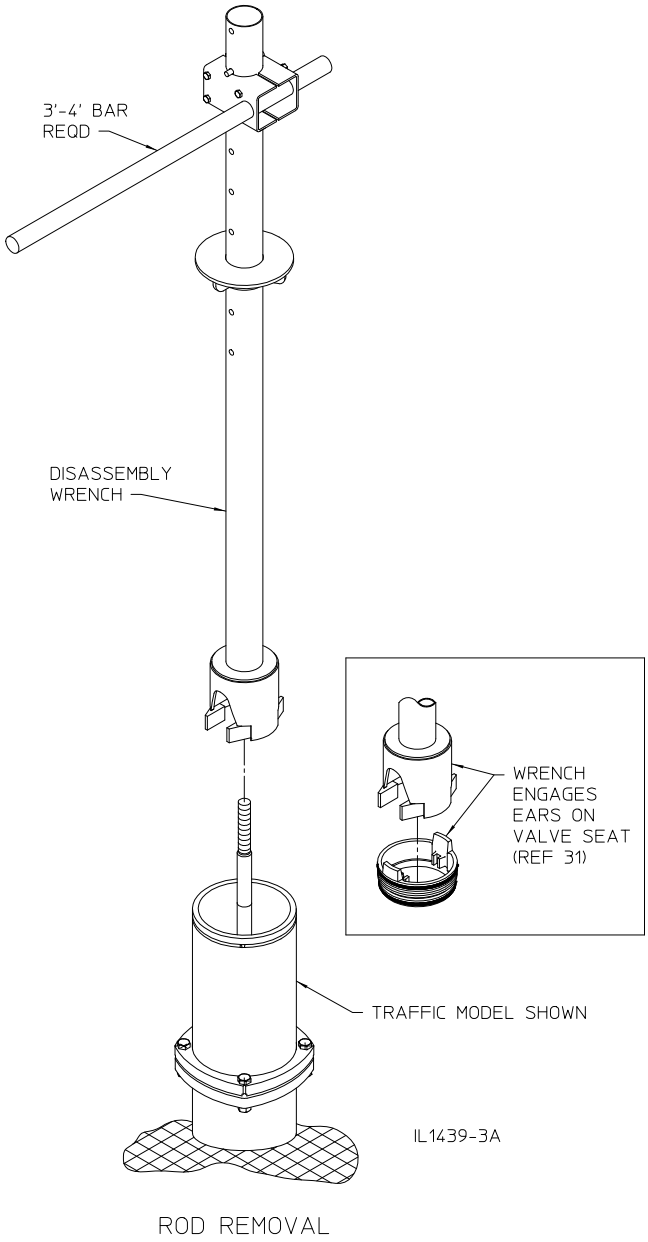

Figure 4. Rod Disassembly

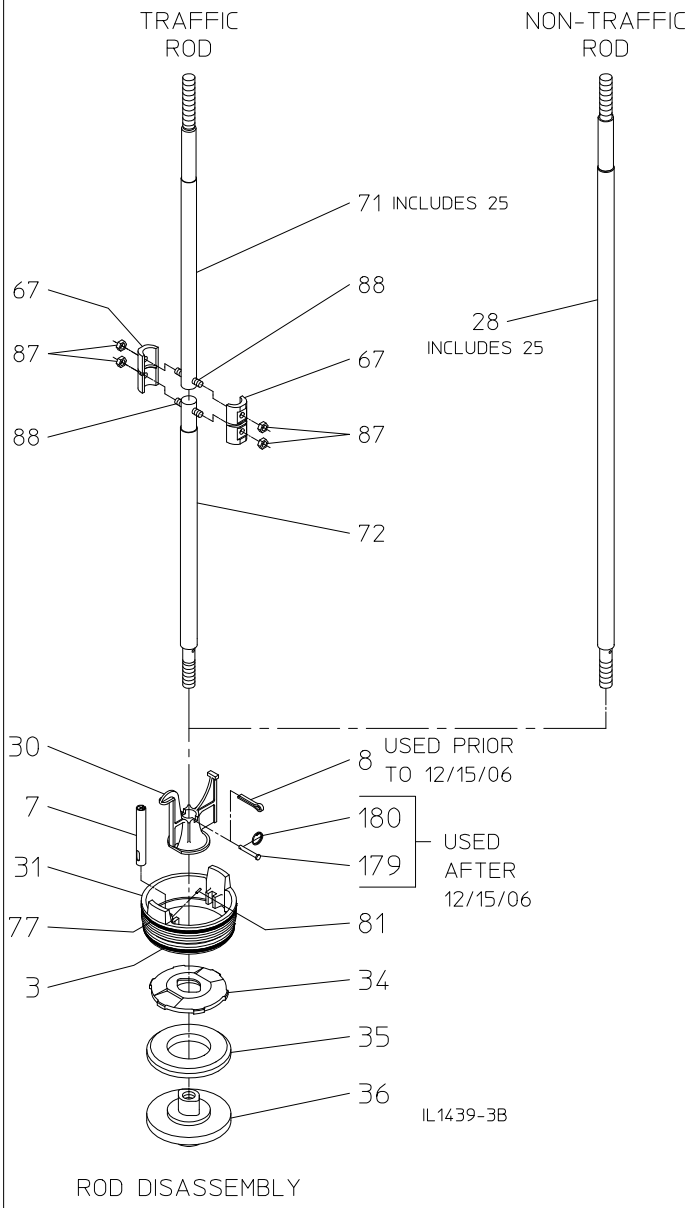

Nozzle Section Bushing Replacement

WARNING: Special care should be taken in the installation, inspection and repair of pressure containing devices such as valves and hydrants. FAILURE TO FOLLOW PROPER PRACTICE AND GUIDELINES CAN RESULT IN SERIOUS INJURY OR DEATH. High pressure and water hammer, due to rapid opening or closing of a hydrant or valve, can also cause major damage to the hydrant, valve, water main, fire hose, or other attached equipment.

1. **Remove the old bushing.** Prior to mid -1988, a nylon bushing was used. Starting mid-1988, a brass bushing was used.

   Nylon Bushing: Peel out with a sharp knife blade.

   Brass Bushing: Peel out with a sharp chisel.

2. **Clean any rust or paint build-up from the inside of the bore**. An abrasive sanding drum, turned with a battery-operated drill works well. An alternative method is to remove any rust or paint using a large half round file. After cleaning, bare metal should be visible in the bore. To check whether the bore has been cleaned to the proper size, partially insert the bushing into the bore from the top of the nozzle section with only slight force from your hand. About one half of the length of the bushing should fit into the bore before it becomes tight.

3. **Apply 1099 Scotch-Grip Adhesive/Sealant (Waterous Part No. V 3405)**: If the hydrant was manufactured after mid-2000, install the back-up ring and O-ring onto the replacement bushing as shown in the detail drawing. If the hydrant was manufactured before mid-2000, remove the back-up ring and O-ring from the replacement bushing and discard. Place the bushing onto the bushing driver and apply a thin, even coating of adhesive/sealant on the outside diameter of the bushing. Apply a thin coating of adhesive/sealant to the inside surface of the bore in the nozzle section and let both parts dry for several minutes. The layers of adhesive should be mostly dry to the touch, with a slightly "tacky" surface.

4. **Drive in the Bushing**: Using the Bushing Driver (Waterous Part No. 72452) and a hammer, drive the bushing into the bore from the inside of the nozzle section. Be sure to drive the bushing until the flange is seated against the counter bore in the nozzle section. The bushing driver should withdraw from the inside of the installed bushing without resistance. If resistance is felt, the rust or paint was not adequately cleaned from the nozzle section bore.

5. **Prepare the Operating Nut:** Remove the old O-ring seal (57) and the Thrust Ring (90) or Thrust Washer (80) from the operating nut (17 or 17B). Inspect the surfaces of the operating nut where the seal and thrust ring or washer were located and remove any paint or rust from the surface using a file or abrasive emery cloth. With the O-ring removed, insert the operating nut into the bore from the top of the nozzle section to test the fit of the operating nut in the newly installed bushing. The nut should turn freely. If not, carefully sand or file the inside diameter of the bushing until the nut will turn freely in the bore. Install the new O-ring seal (57) and the Thrust Ring (90) or Thrust Washer (80) onto the operating nut (17 or 17B).

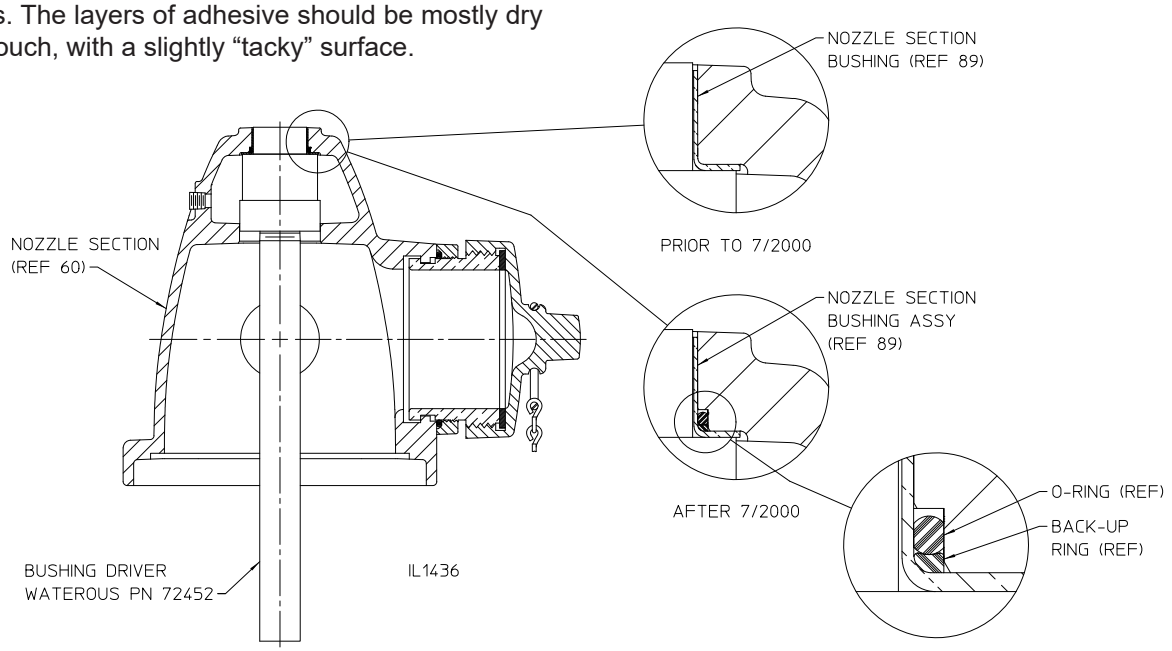

5-1/4" WATEROUS PACER® - TRAFFIC DAMAGE REPAIR

Introduction

Should a hydrant be struck by a vehicle such that the upper barrel is separated / broken from the lower barrel, the following procedure should be followed to reassemble the hydrant and make it operational. (A traffic damage repair kit for the specific hydrant is required to perform this procedure.)

This instruction covers the repair of Pacer Traffic models. The Pacer Traffic models are furnished in two main variations:

- 150 PSIG rated working pressure models WB67
- 250 PSIG rated working pressure models WB67-250

Although it is possible to repair break features of the hydrant under pressure, the extent of a traffic impact may be unknown. It is considered safe practice to close the auxilliary valve ahead of the hydrant, or use another means to cut off flow and pressure to the hydrant.

The disassembly and reassembly procedure varies slightly for each. Also, the 150 PSIG rated model was furnished with two types of breakable parts as follows:

- Prior to June, 1980 - The upper standpipe was designed to fracture at the lower lock ring groove. The flanges remained intact.
- After June, 1980 - A flange which is designed to fracture is used and the upper standpipe remains intact (this design also is used on all 250 PSIG rated Pacers).

The repair kits and repair procedure vary slightly for each type. Refer to below to identify which variation of Pacer hydrant and type of breakable parts you have

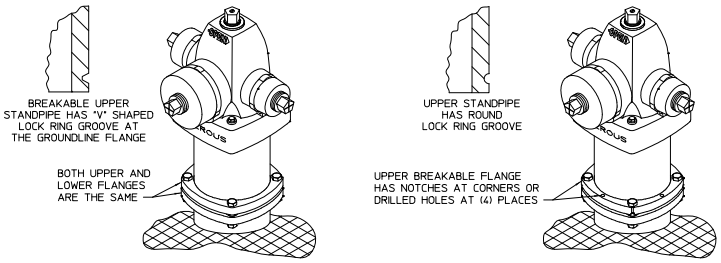

PRIOR TO JUNE, 1980
(BREAKABLE UPPER STANDPIPE)
REPAIR KIT K 525 REQD
(UPPER STANDPIPE MUST BE REPLACED)

AFTER JUNE, 1980
(BREAKABLE FLANGE)
REPAIR KIT K 528 REQD

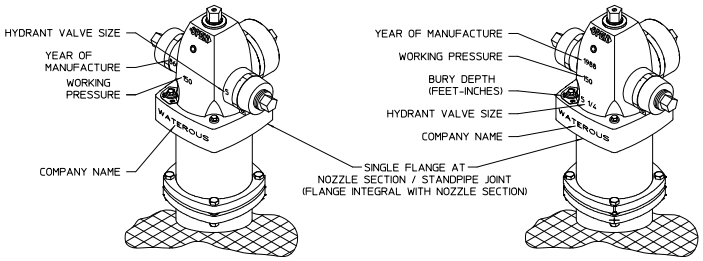

PRIOR TO 1987

AFTER 1987

IDENTIFICATION MARKINGS

150 PSIG RATED PACERS
BUILT FROM 1967 TO 1998

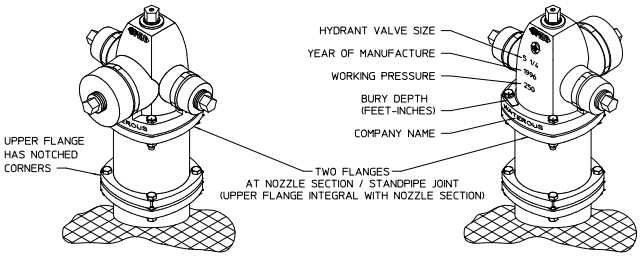

BUILT ALL YEARS
(BREAKABLE FLANGE)
REPAIR KIT K 528 REQD

IDENTIFICATION MARKINGS

250 PSIG RATED PACERS
BUILT FROM 1996 TO PRESENT

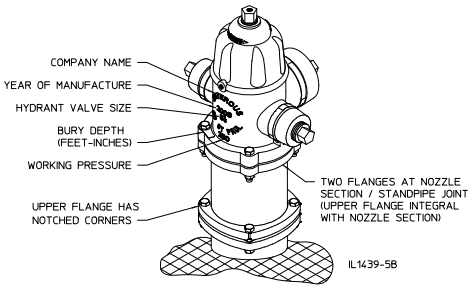

IDENTIFICATION MARKINGS
BUILT ALL YEARS
(BREAKABLE FLANGE)
REPAIR KIT K 528 REQD

250 PSIG RATED CLASSIC PACERS
BUILT FROM 2009 TO PRESENT

5-1/4" Waterous Pacer® – Traffic Damage Repair

View Video

150 PSIG Rated Working Pressure 5-1/4" Waterous Pacer Using Repair Kits K525 or K528

WARNING: Special care should be taken in the installation, inspection and repair of pressure containing devices such as valves and hydrants. FAILURE TO FOLLOW PROPER PRACTICE AND GUIDELINES CAN RESULT IN SERIOUS INJURY OR DEATH. High pressure and water hammer, due to rapid opening or closing of a hydrant or valve, can also cause major damage to the hydrant, valve, water main, fire hose, or other attached equipment.

The extent of a traffic impact may be unknown. It is considered safe practice to close the auxilliary valve ahead of the hydrant, or use another means to cut off flow and pressure to the hydrant.

Note: Where grease is specified, use an AMERICAN Flow Control recommended food grade grease. ***150 PSIG Rated 5-1/4" Waterous Pacers (See Figure 2, Page 2B-27)***

1. At the ground line, remove bolts (6B) and nuts (6C) which attach the upper and lower flanges. Discard the gasket, nuts and bolts.

   Note: If top of the hydrant is completely broken away from the lower portion of the hydrant, step 1 may not be necessary.

2. At the nozzle section, remove bolts (6A), nuts (6C) and clamps (62) from underneath the flange of the nozzle section (60). Depth plate and plain washer (61) will come off with bolts.

   Note: If clamps (62) should stick underneath the flange of the nozzle section (60), it may be necessary to drive them out.

3. If the breakable upper standpipe is fractured (hydrants built prior to June, 1980), discard upper standpipe (40) and the lower flange. A new upper standpipe with a breakable flange is furnished in kit K525.
4. Turn upper operating nut (17B) or weathershield nut (101) in the opening direction to separate the nozzle section (60) and the support (56). Remove the nozzle section, lifting upward. **Use proper handling techniques to avoid injury.**
5. Remove operating nut (17B or 17) from the nozzle section (60). (On hydrants with weathershield, it is necessary to drive out pin (102) and remove weathershield (101) before upper operating nut can be removed.)

   Note: Bushing (89) is cemented in nozzle section (60). Removing it is not necessary unless it is damaged. If replacement is necessary, see Page 2B-24.

6. Unscrew lower operating nut (17A - two-piece nuts, 17 - one-piece nut), and remove support tube (85).
7. Unscrew hex stop nut (86) from operating rod (71), and remove support (56).
8. Remove nuts (87) and rod coupling halves (67) from upper and lower rods (71 & 72). Carefully check upper rod (71) to make sure it is not bent more than 1/8 in. out of straightness. Straighten or replace if necessary. Also check studs (88) for thread damage or bending which will prevent the installation of new coupling halves. Replace studs if necessary.
9. Position upper rod (71) over lower rod (72) and install new coupling halves (67). Install nuts (87) and tighten securely.

Hydrants built prior to June, 1980 (K525)

10a. Slide breakable flange (113) over lower end of the new upper standpipe (40). (The lower end has the lock ring groove 3/8 in. from the end.) Install lock rings (64) in grooves on the upper standpipe. (Be sure flange is orientated so that the larger ID of the flange engages the lock ring properly.) See Figure 3 on Page 2B-27

Hydrants built after June, 1980 (K528)

10b. Remove lock rings (64) from the bottom of the upper standpipe (40). Remove old breakable flange (113) from the upper standpipe if it is still attached (in most cases, it will fracture and disengage itself from the upper standpipe). Slide new breakable flange (113) over the upper standpipe (40) (orient flange so that the larger ID of the flange will point down and properly engage the lock ring). See Figure 3. Install lock ring (64) in the bottom groove of the upper standpipe (40). Slide flange (113) down and over the lock ring (64).

11. Place new gasket (92) on the lower standpipe with the lip pointing down. Position the upper standpipe (40) on the lower standpipe and install bolts (6B) through flanges (113) and (63). Install nuts (6C) and tighten the four bolts evenly. Tighten to 60-70 ft-lbs of torque.

    Note: Be sure to install the upper standpipe correctly. The groove at the top must be 3/4 inch from the end. The groove at the bottom must be 3/8 inch from the end. Also, the breakable flange (113) must be at the bottom (groundline) end. See Figure 3 on Page 2B-27.

12. Grease O-ring and gasket grooves in support (56), and grease O-rings (59), gaskets (84) and lower tube seal (83). Tape threads of operating rod (71) to protect O-rings. Install support (56) onto operating rod (71), being careful not to damage O-rings on operating rod threads. Remove tape from threads.
13. Install hex stop nut (86), threading it down to end of thread. Snug up with a torque of 30 ft-lbs (30 lb at end of 12 inch wrench).
14. Grease O-ring in upper end of support tube (85). Slide tube down over operating rod (71) until it is seated on support (56).
15. Grease threads of operating rod (71) and lower bearing surface of operating nut (17A or 17). Screw lower operating nut onto rod while centering support (56) on the standpipe. Tighten operating nut (17A or 17) to securely clamp support (56) against upper standpipe (40). Be sure support (56) is centered on upper standpipe (40).

150 PSIG Rated Working Pressure 5-1/4” Waterous Pacer Using Repair Kits K525 or K528

16. Grease and install thrust ring (90) and O-ring (57) in upper operating nut (17B or 17). If hydrant has a two-piece operating nut, set upper operating nut (17B) on lower operating nut (17A) and engage lugs in slots.
17. Make sure lock ring (64) is properly installed in the upper standpipe (40). Carefully lower nozzle section (60) over upper operating nut (17B or 17) until it seats on support (56). Rotate nozzle section (60) to desired position. Install clamps (62), bolts (6A) and nuts (6C) in flange of nozzle section and tighten finger tight.
18. Be sure to install depth plate and washers (61) in proper position. Make sure all clamps are seated properly up under nozzle section flange and tighten all bolts and nuts evenly. Tighten to 60-70 ft-lbs of torque.
19. Back off operating nut slightly to release tension on operating rod. Since water pressure will hold valve up against seat, it is not necessary to turn operating nut to a dead stop if the valve and seat are in good condition.

    Lubricate hydrant as shown in Figure 4.

    Note: When a supply of gaskets and O-rings are available, always install new ones when reassembling the hydrant. Clean dirt from O-ring grooves.

Figure 2. 150 P.S.I.G. Traffic Repair

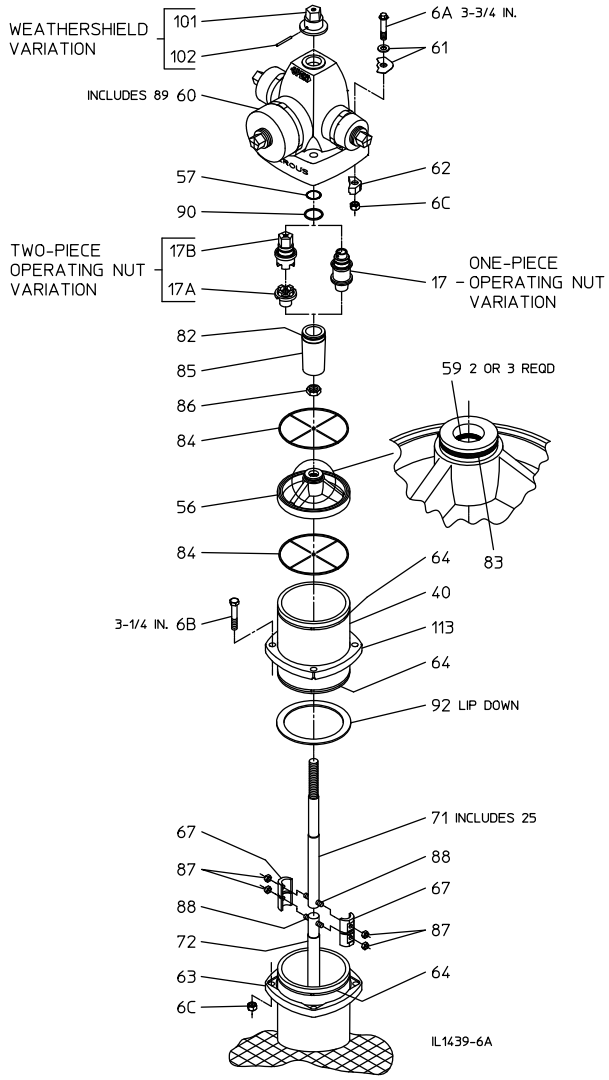

Figure 3. Upper Standpipe/Breakable Flange Orientation

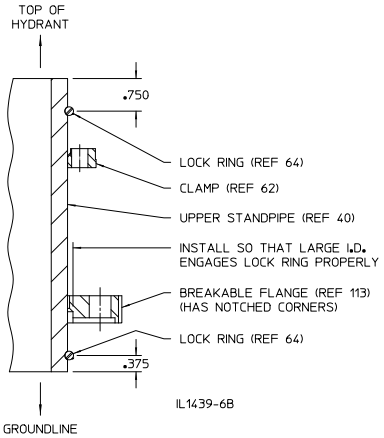

Figure 4. Lubrication Detail

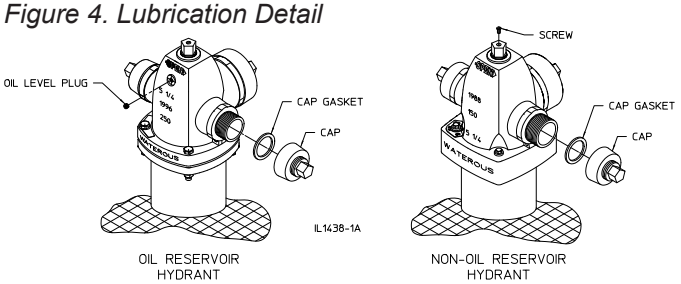

1. Oil Reservoir Hydrants: Remove oil level plug. Add oil to the level of the plug. Use an AMERICAN Flow Control recommended oil.
   Non-Oil Reservoir Hydrants: Remove screw from operating nut and add approximately one tablespoon of oil through opening. Replace screw. Use an AMERICAN Flow Control recommended oil.
2. Remove all nozzle caps, clean rust or corrosion from threads of nozzles and caps. Replace cap gaskets if necessary. Apply a light coat of grease to nozzle threads before replacing cap. **Use an AMERICAN Flow Control recommended food grade grease.**

250 PSIG Rated Working Pressure 5-1/4" Waterous Pacer Using Repair Kit K528

View Video

Although it is possible to repair break features of the hydrant under pressure, the extent of a traffic impact may be unknown. It is considered safe practice to close the auxilliary valve ahead of the hydrant, or use another means to cut off flow and pressure to the hydrant.

Note: Where grease is specified, use an AMERICAN Flow Control recommended food grade grease.

250 PSIG Rated Pacers (See Figure 5, Page 2B-29)

1. At the groundline, remove bolts (6B) and nuts (6C) which attach the upper and lower flanges. Discard the gasket, nuts and bolts.

   Note: If top of the hydrant is completely broken away from the lower portion of the hydrant, step 1 may not be necessary.

2. At the nozzle section, remove bolts (6A), nuts (6C) and allow flange (62B) to slide down the upper standpipe. Depth plate and plain washer (61) will come off with bolts.

3. Turn upper operating nut (17B) or weathershield nut (101) in the opening direction to separate the nozzle section (60) and the support (56). Remove the nozzle section. **Use proper handling techniques to avoid injury.**

4. Remove operating nut (17B or 17) from the nozzle section (60). (On hydrants with weathershield, it is necessary to drive out pin (102) and remove weathershield (101) before upper operating nut can be removed.)

   Note: Bushing (89) is cemented in nozzle section (60). Removing it is not necessary unless it is damaged. If replacement is necessary, see Page 2B-24.

5. Unscrew lower operating nut (17A - two- piece nuts, 17 - one-piece nut), and remove support tube (85).

6. Unscrew hex stop nut (86) from operating rod (71), and remove support (56).

7. Remove coupling nuts (87) and sleeves (67) from upper and lower rods (71 & 72). Carefully check upper rod (71) to make sure it is not bent more than 1/8 inch out of straightness. Straighten or replace if necessary. Also check studs (88) for thread damage or bending which will prevent the installation of a new coupling. Replace studs if necessary.

8. Position upper rod (71) over lower rod (72) and install new coupling halves (67). Install nuts (87) and tighten securely.

9. Remove lock ring (64) from the bottom of the upper standpipe (40). Remove old breakable flange (113) from the upper standpipe if it is still attached (in most cases, it will fracture and disengage itself from the upper standpipe). Slide new breakable flange (113) over the upper standpipe (40). Orient flange so that the larger ID of the flange will point down and properly engage the lock ring. Install lock ring (64) in the bottom groove of the upper standpipe (40). Slide flange (113) down and over the lock ring (64). See Figure 6, on Page 2B-29.

10. Place new gasket (92) on the lower standpipe with the lip pointing down. Position the upper standpipe (40) on the lower standpipe and install bolts (6B) through flanges (113) and (63). Install nuts (6C) and tighten the four bolts evenly. Tighten to 60-70 ft-lbs of torque.

11. Grease O-ring and gasket grooves in support (56), and grease O-rings (59), gaskets (84) and lower tube seal (83). Tape threads of operating rod (71) to protect O-rings. Install support (56) onto operating rod (71), being careful not to damage O-rings on operating rod threads. Remove tape from threads. See Figure 6, on Page 2B-29.

12. Install hex stop nut (86), threading it down to end of thread. Snug up with a torque of 30 ft-lbs (30 lb at end of 12 inch wrench).

13. Grease O-ring in upper end of support tube (85). Slide tube down over operating rod (71) until it is seated on support (56).

14. Grease threads of operating rod (71) and lower bearing surface of operating nut (17A or 17). Screw lower operating nut onto rod while centering support (56) on the standpipe. Tighten operating nut (17A or 17) to securely clamp support (56) against upper standpipe (40). Be sure support (56) is centered on upper standpipe (40).

15. Grease and install thrust ring (90) and O-ring (57) in upper operating nut (17B or 17). If hydrant has a two-piece operating nut, set upper operating nut (17B) on lower operating nut (17A) and engage lugs in slots.

    Note: Be sure to install the upper standpipe correctly. The groove at the top must be 3/4 inch from the end. The groove at the bottom must be 3/8 inch from the end. Also, the breakable flange (113) must be at the bottom (groundline) end of the upper standpipe. See Figure 6, on Page 2B-29.

16. Carefully lower nozzle section (60) over upper operating nut (17B or 17) until it seats on support (56). Rotate nozzle section (60) to desired position. Install bolts (6A) and nuts (6C) through flange of nozzle section and flange (62B) and tighten finger tight. Be sure to install depth plate and washers (61) in proper position. Make sure flange (62B) is seated properly with flange lock ring (64) and tighten all bolts and nuts evenly. Tighten to 60-70 ft-lbs of torque.

17. Back off operating nut slightly to release tension on operating rod. Since water pressure will hold valve up against seat, it is not necessary to turn operating nut to a dead stop if the valve and seat are in good condition.

18. Lubricate hydrant as shown in Figure 7.

    Note: When a supply of gaskets and O-rings are available, always install new ones when reassembling the hydrant. Clean dirt from O-ring grooves.

Figure 5. 250 PSIG Traffic Repair

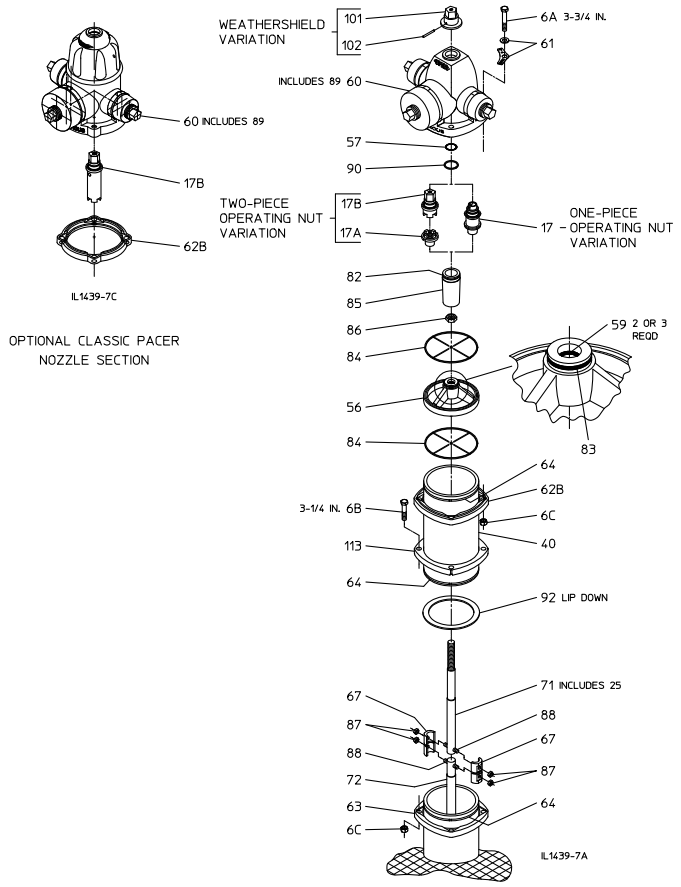

Figure 6. Upper Standpipe (Breakable Flange Orientation)

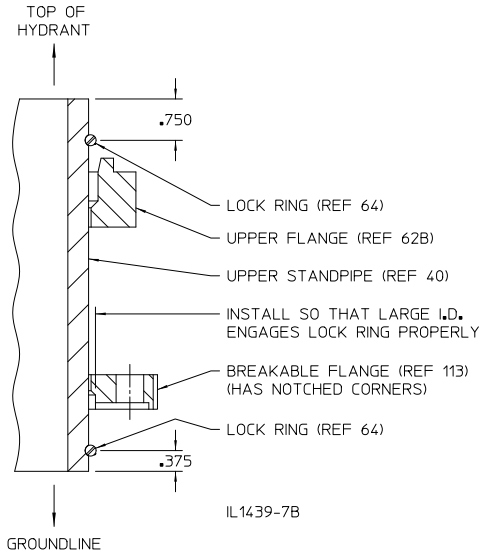

Figure 7. Lubrication Detail

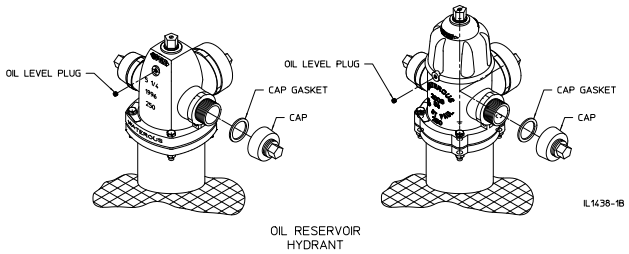

1. Remove oil level plug and add oil to the level of the plug. Use an AMERICAN Flow Control recommended oil.
2. Remove all nozzle caps, clean rust or corrosion from threads of nozzles and caps. Replace cap gaskets if necessary. Apply a light coat of grease to nozzle threads before replacing cap. Use an AMERICAN Flow Control recommended oil.

5-1/4” WATEROUS PACER® - NOZZLE REPLACEMENT

Mechanically Attached Nozzles

WARNING: POTENTIAL HYDRANT CAP HAZARD. FAILURE TO RELIEVE PRESSURE CAN RESULT IN THE CAP BLOWING OFF, CAUSING SERIOUS INJURY OR DEATH. Make sure the auxiliary gate valve in the lateral between the main and the hydrant is closed and that the hydrant is not charged with pressure when removing caps.

On Waterous Pacer fire hydrants that are equipped with Mechanically Attached nozzles, a retainer is threaded onto the nozzle, an O-ring against the face of the outlet socket of the nozzle section, creating a water tight seal.

Waterous has The following wrenches are available for removing and installing retainers.

- For Threaded Pumper Nozzles and 4-inch Storz Nozzles: Part No. 81420
- For 5 in. Storz Pumper Nozzles: Part No. 82766
- For 2½ inch Hose Nozzles: Part No. 72094

Figure 1. Mechanically Attached Nozzles

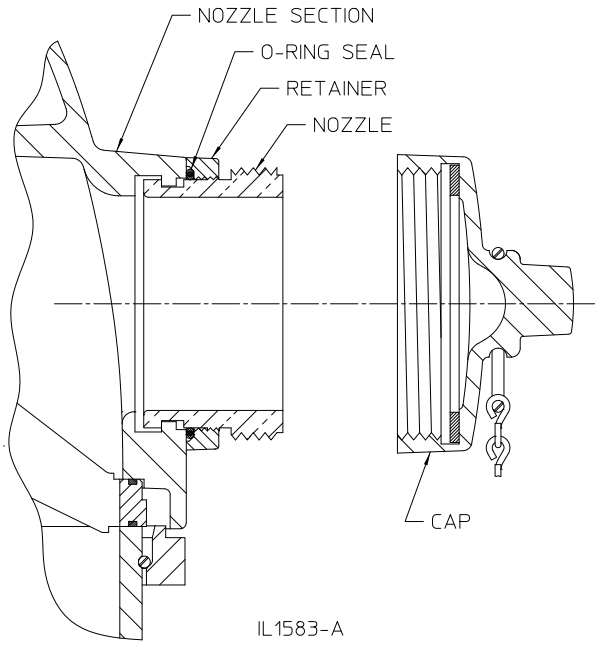

5-1/4” Waterous Pacer® - Nozzle Replacement

Mechanically Attached Pumper Nozzle

View Video

Removal

WARNING: POTENTIAL HYDRANT CAP HAZARD. FAILURE TO RELIEVE PRESSURE CAN RESULT IN THE CAP BLOWING OFF, CAUSING SERIOUS INJURY OR DEATH. Make sure the auxiliary gate valve in the lateral between the main and the hydrant is closed and that the hydrant is not charged with pressure when removing caps.

1. Carefully remove the cap while standing away from the direction of potential discharge.
2. Place wrench on the retainer so it engages the rounded protrusions and unthread from nozzle.

   Removal of the 5-inch Storz hydrant nozzle requires the use of the hinged pumper-nozzle retainer wrench (Waterous Part No. 82766).
3. Rotate nozzle counterclockwise until the four lugs on the nozzle disengage the recesses in the nozzle section socket which will allow the nozzle to be removed.

Installation

1. Thread retainer onto the retainer threads of the pumper nozzle.
2. Grease O-ring and place it over nozzle starting from the end with the four lugs and into the chamfer recess in the retainer.
3. Insert the nozzle/retainer/O-ring subassembly into the socket in the nozzle section. Rotate the subassembly clockwise until it stops with the four lugs on the nozzle fully engaged in the anti-rotation recesses in the socket. If it cannot be rotated, turn the retainer in a direction to allow the nozzle to be inserted further into the socket so the subassembly rotates clockwise against the stops.
4. Hand tighten the retainer to press O-ring against the face of the socket.
5. Place wrench on the retainer so it engages the rounded protrusions, tighten firmly.

   Installation of the 5-inch Storz hydrant nozzle requires the use of the hinged pumper-nozzle retainer wrench (Waterous Part No. 82766).
6. Clean rust or corrosion from cap threads and replace cap gasket if necessary. Apply a light coat of grease to the nozzle threads and install the cap.
7. Cap all nozzles and open the hydrant valve, check the area around the repaired nozzle for leaks.

   NOTE: Where grease is specified, use an AMERICAN Flow Control recommended food -grade grease.

Figure 3. Mechanically Attached Pumper Nozzle

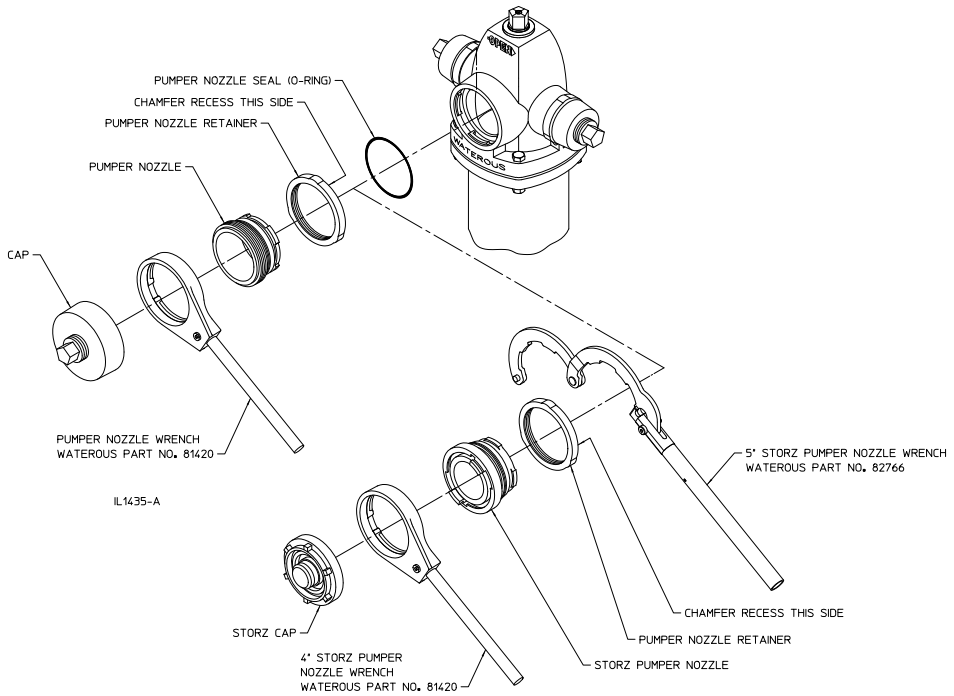

5-1/4” Waterous Pacer® - Nozzle Replacement
Mechanically Attached 2-1/2” Hose Nozzle

View Video

Removal

WARNING: POTENTIAL HYDRANT CAP HAZARD. FAILURE TO RELIEVE PRESSURE CAN RESULT IN THE CAP BLOWING OFF, CAUSING SERIOUS INJURY OR DEATH. Make sure the auxiliary gate valve in the lateral between the main and the hydrant is closed and that the hydrant is not charged with pressure when removing caps.

1. Carefully remove the cap while standing away from the direction of potential discharge.
2. Place wrench on the retainer so it engages the rounded protrusions and unthread from nozzle.
3. Rotate nozzle counterclockwise until the two lugs on the nozzle disengage the recesses in the nozzle section socket which will allow the nozzle to be removed.

Installation

1. Insert hose nozzle into the socket of the nozzle section and turn clockwise until it stops with the two lugs on the nozzle fully engaged in the anti-rotation recesses in the socket.
2. Grease O-ring and place it over the nozzle and against the face of the socket.
3. Thread retainer onto the hose nozzle and hand tighten to press the O-ring against the face of the socket.
4. Place wrench on retainer so it engages the rounded protrusions, and tighten firmly.
5. Clean rust or corrosion from cap threads and replace cap gasket if necessary. Apply a light coat of grease to the nozzle threads and install the cap.

   NOTE: Where grease is specified, use an AMERICAN Flow Control recommended food -grade grease.

Figure 4. Mechanically Attached Hose Nozzle

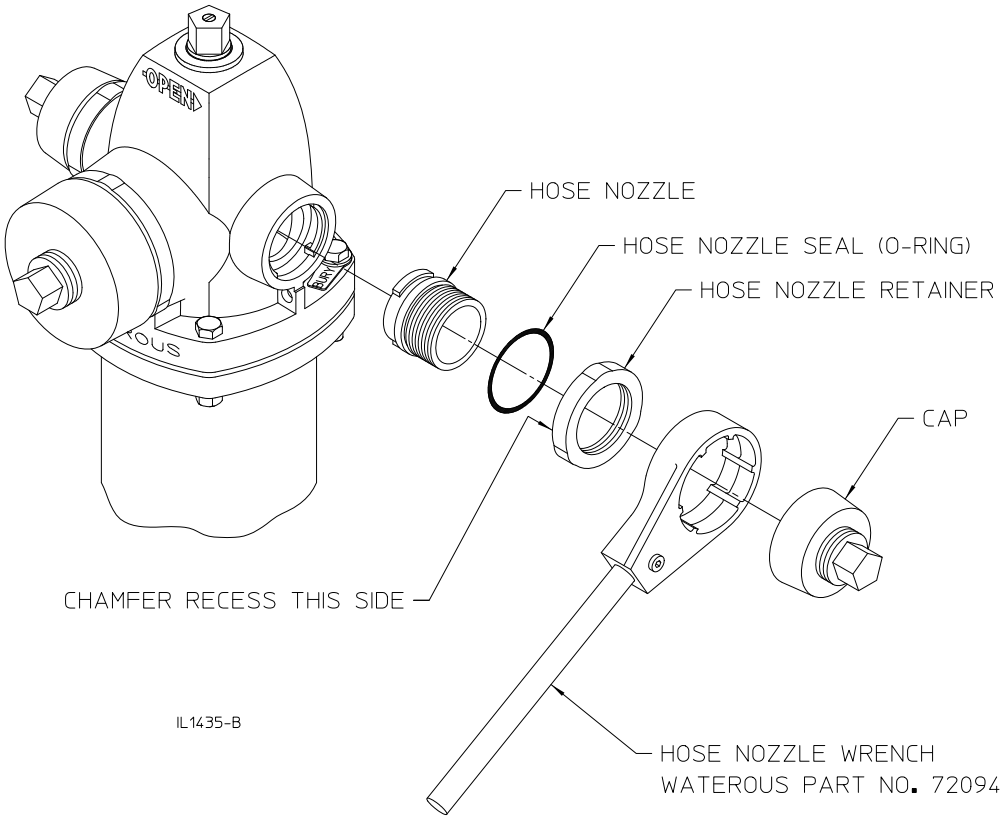

5-1/4” WATEROUS PACER® - EXTENDING TRAFFIC MODEL

Introduction View Video

This instruction covers the installation of the standpipe and rod extension kit (K562) for 5-1/4” Waterous Pacer Traffic models. Traffic 5-1/4” Waterous Pacer models are furnished in two main variations:

- 150 PSIG rated working pressure models WB67
- 250 PSIG rated working pressure models WB67-250

The extension kit installation is identical for both variations; however, the disassembly and reassembly varies slightly. Refer to the identification diagram below to identify which variation of 5-1/4” Waterous Pacer hydrant you have.

Figure 1. Identification Diagram

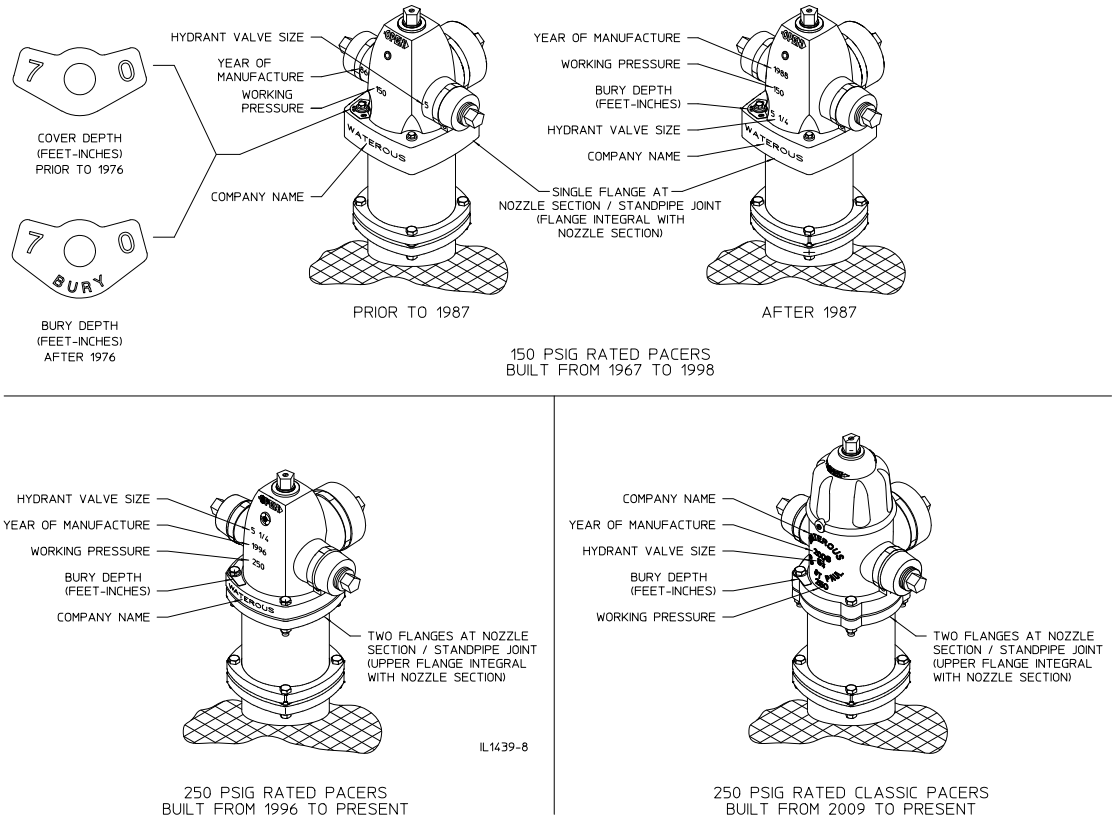

Important Notes

1. Waterous recommends a new rod corresponding to the extended bury or cover depth be installed in place of a rod extension if the hydrants meet one or more of the following criteria:
   a. The length of the rod extension required exceeds 4 ft-0 in..
   b. The hydrant has already been extended. Only one rod extension per hydrant is recommended.
   c. **150 P.S.I.G. rated Pacers only:**
   The depth of the extended hydrant will exceed 9 ft -0 in. bury or 8 ft-6 in. cover. Depths of 9 ft-6 in. thru 11 ft-6 in. bury and 9 ft-0 in. thru 11 ft-0 in. cover should have a heavy duty (larger diameter) rod installed. Note that 250 PSI rated Pacers are supplied with heavy duty rods for all depths from the factory.
2. If extended depth of hydrant will exceed 11 ft-6 in. bury or 11 ft-0 in. cover, a “bottom extension” should be installed in place of a standpipe and rod extension.
3. Contact Waterous Company for appropriate parts and guidance if any of the above situations exist.

WARNING: Special care should be taken in the installation, inspection and repair of pressure containing devices such as valves and hydrants. FAILURE TO FOLLOW PROPER PRACTICE AND GUIDELINES CAN RESULT IN SERIOUS INJURY OR DEATH. High pressure and water hammer, due to rapid opening or closing of a hydrant or valve, can also cause major damage to the hydrant, valve, water main, fire hose, or other attached equipment.

Note: Where grease is specified, use an AMERICAN Flow Control recommended food grade grease.

1. Close the hydrant valve. Although it is possible to extend the hydrant under pressure, it is considered safe practice to close the auxilliary valve ahead of the hydrant, or use another means to cut off flow and pressure to the hydrant.

250 PSIG Rated Pacers (See Figure 2, Page 2B-35)

2a. At the nozzle section, remove bolts (6A), nuts (6C), and allow flange (62B) to slide down the upper standpipe. Depth plate and washer (61) will come off with bolts.

150 PSIG Rated Pacers (See Figure 3, Page 2B-35)

2b. At the nozzle section, remove bolts (6A), nuts (6C) and clamps (62) from underneath flange of the nozzle section (60). Depth plate and plain washer (61) will come off with bolts.

Note: If clamps (62) should stick underneath the flange of the nozzle section (60), it may be necessary to carefully drive them out.

3. Turn upper operating nut (17B) or weathershield nut (101) in the opening direction to separate the nozzle section (60) and the support (56). Remove the nozzle section, lifting upward. **Use proper handling and lifting techniques to avoid injury.**

4. Remove operating nut (17B or 17) from the nozzle section (60). (On hydrants with weathershield, it is necessary to drive out pin (102) and remove weathershield (101) before upper operating nut can be removed.)

Note: Bushing (89) is cemented in nozzle section (60). Removing it is not necessary unless it is damaged. If replacement is necessary, contact the Waterous Company.

5. Unscrew lower operating nut (17A - two-piece nuts, 17 - one-piece nut), and remove support tube (85).

6. Unscrew hex stop nut (86) from operating rod (28), and remove support (56).

7. Remove bolts (6B) and nuts (6C) and lift off upper standpipe (40). Discard gasket (92), bolts (6B) and nuts (6C). Note that on 250 PSI Pacers, flange (113) and (62B) will remain attached to the upper standpipe (40). On 150 PSI Pacers, flange (113) will remain attached. It is not necessary to remove these flanges. They may remain on the upper standpipe.

8. Safely disassemble breakable coupling. Unscrew nuts (87) and remove rod coupling halves (67) which join the upper rod (71) to the lower rod (72). Do not remove studs (88) unless they are damaged.

9. Install rod extension (74) on existing lower rod (72) using extension couplings (174). Slide coupling halves (174) onto studs in rod extension (74) and lower rod (72) and install nuts (87). Note: Be sure extension couplings are installed at the original ground line. Refer to Figure 5 on Page 2B-38.

10. Install flanges (63) and lock rings (64) onto standpipe extension (45). Be sure to orient flanges properly. Refer to Figure 4 on Page 2B-38.

11. Install gasket (92) on existing standpipe with lip pointing down. Install standpipe extension (45) on existing standpipe. Install bolts (6D) and nuts (6C) through flanges (63) and tighten finger tight. Make sure flanges (63) are seated properly on lock rings (64) and tighten all bolts and nuts evenly. Tighten to 60-70 ft-lbs torque.

12. Install existing upper rod (71) onto rod extension (74) using breakable couplings (67). Slide coupling halves (67) onto studs in rod extension (74) and upper rod (71) and install nuts (87). Note: Be sure breakable couplings are installed at the new ground line. Refer to Figure 5 on Page 2B-38.

13. Install gasket (92) on standpipe extension (45) with lip pointing down. Install existing upper standpipe (40) on standpipe extension. Install bolts (6B) and nuts (6C) through flanges (113) and (63) and tighten finger tight. Be sure flanges engage lock rings (64) properly and tighten all bolts and nuts evenly. Note that breakable flange (113) must be on the bottom of the upper standpipe. Also, upper standpipe (40) must be installed properly with the groove 3/4 in. from the end at the top and the groove 3/8 inch from the end at the bottom. Refer to Figure 5 on Page 2B-38.

14. Grease O-ring and gasket grooves in support (56), and grease O-rings (59), gaskets (84) and lower tube seal (83). Tape threads of operating rod (71) to protect O-rings. Install support (56) onto operating rod (71), being careful not to damage O-rings on operating rod threads. Remove tape from threads.

15. Install hex stop nut (86), turning it down to end of thread. Snug up with a torque of 30 ft-lbs (30 lb, at end of 12 inch wrench).

16. Grease O-ring in upper end of support tube (85). Slide tube down over operating rod (71) until it is seated on support (56).

17. Grease threads of operating rod (71) and lower bearing surface of operating nut (17A or 17). Screw lower operating nut onto rod while centering support (56) on the standpipe. Tighten operating nut (17A or 17) to securely clamp support (56) against upper standpipe (40). Be sure support (56) is centered on upper standpipe (40).

18. Grease and install thrust ring (90) and O-ring, (57) in operating nut (17B or 17). If hydrant has a two-piece operating nut, set upper operating nut (17B) on lower operating nut (17A) and engage lugs in slots.

250 PSIG. Rated Pacers (See Figure 2)

19a. Carefully lower nozzle section (60) over operating nut (17b or 17) until it seats on support (56). Rotate nozzle section (60) to desired position. Install bolts (6A) and nuts (6C) through flange of nozzle section and flange (62B) and tighten finger tight. Be sure to install depth plate and washers (61) in proper position. Also install extension plate (157) opposite the bury depth plate (see Figure 6). Make sure flange (62B) is seated properly with lock ring (64) and tighten all bolts and nuts evenly. Tighten to 60-70 ft-lbs of torque.

150 PSIG Rated Pacers (See Figure 3)

19b. Make sure lock ring (64) is properly installed in upper standpipe. Carefully lower nozzle section (60) over upper operating nut (17B or 17) until it seats on support (56). Rotate nozzle section (60) to desired position. Install clamps (62), bolts (6A) and nuts (6C) in flange of nozzle section and tighten finger tight. Be sure to install depth plate and washers (61) in proper position. Also install extension plate (157) opposite the bury depth plate (see Figure 6). Make sure all clamps are seated properly up under flange, and tighten all bolts and nuts evenly. Tighten to 60-70 ft-lbs of torque.

20. Back off operating nut slightly to release tension on operating rod. Since water pressure will hold valve up against seat, it is not necessary to turn operating nut to a dead stop if the valve and seat are in good condition.

21. Lubricate hydrant as shown in Figure 7 on Page 2B-38.

Note: When a supply of gaskets and O- rings are available, always install new ones when reassembling the hydrant. Clean dirt from O-ring grooves.

Figure 2. Installation Diagram - 250 PSIG Rated Pacer

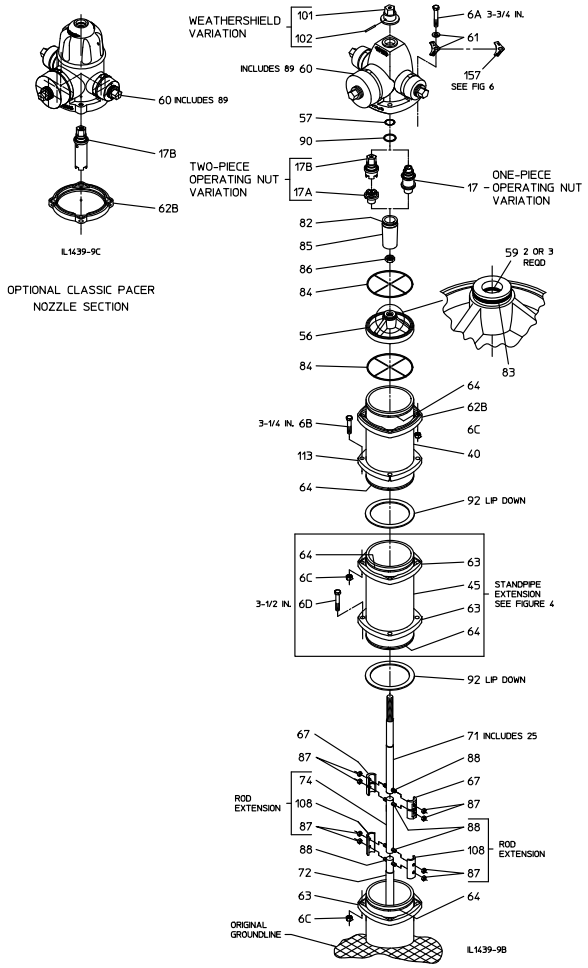

Figure 3. Installation Diagram - 150 PSIG Rated Pacer

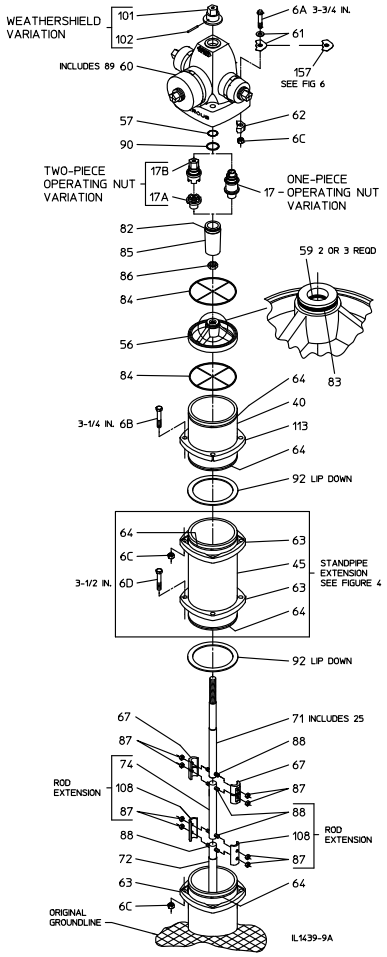

Figure 4. Standpipe Extension/Flange Orientation

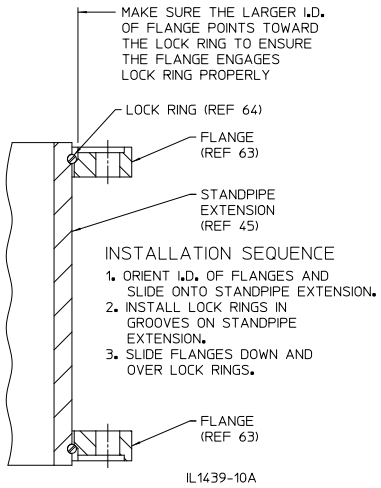

Figure 6. Extension Plate Installation

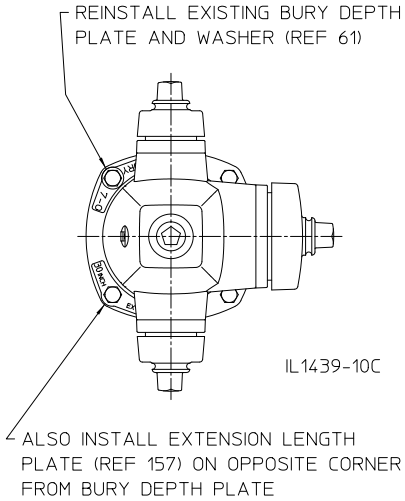

Figure 5. Extension Parts / Existing Parts Orientation

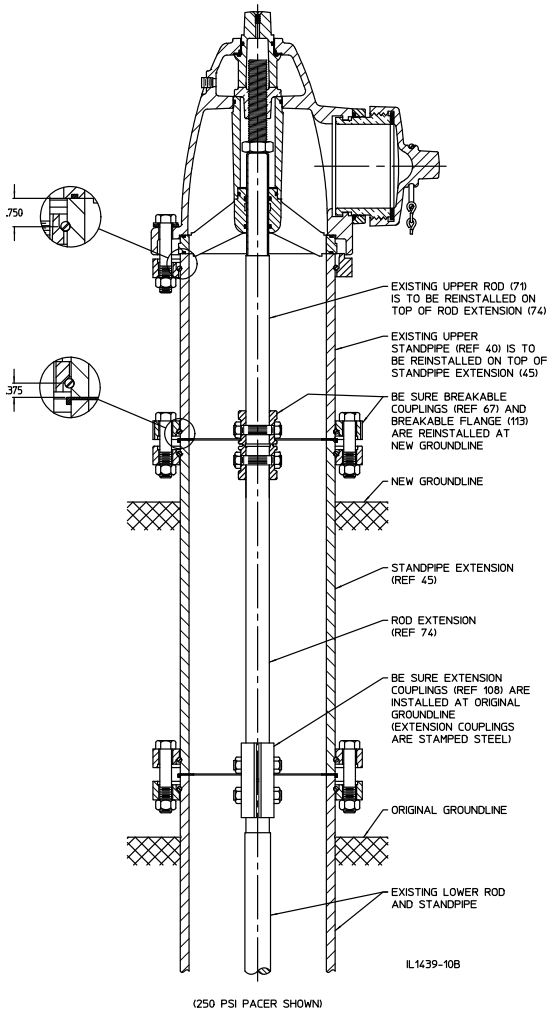

Figure 7. Lubrication Detail

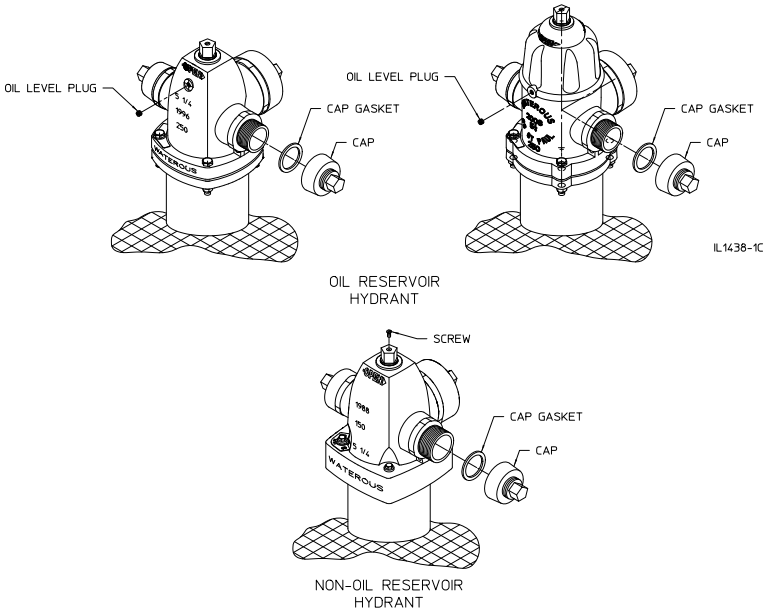

1. Oil Reservoir Hydrants: Remove oil level plug. Add oil to the level of the plug. Use an AMERICAN Flow Control recommended oil.

   Non-Oil Reservoir Hydrants: Remove screw from operating nut and add approximately one tablespoon of oil through opening. Replace screw. Use an AMERICAN Flow Control recommended oil.

2. Remove all nozzle caps, clean rust or corrosion from threads of nozzles and caps. Replace cap gaskets if necessary. Apply a light coat of grease to nozzle threads before replacing cap. Use an AMERICAN Flow Control recommended food-grade grease.

Introduction

This instruction covers the installation of the standpipe and rod extension kit (K563) for Pacer non-Traffic models. Non-Traffic Pacer models are furnished in two main variations:

- 150 PSIG rated working pressure models W67
- 250 PSIG rated working pressure models W67-250

The extension kit installation is identical for both variations; however, the disassembly and reassembly varies slightly. Refer to the identification diagram below to identify which variation of Pacer hydrant you have.

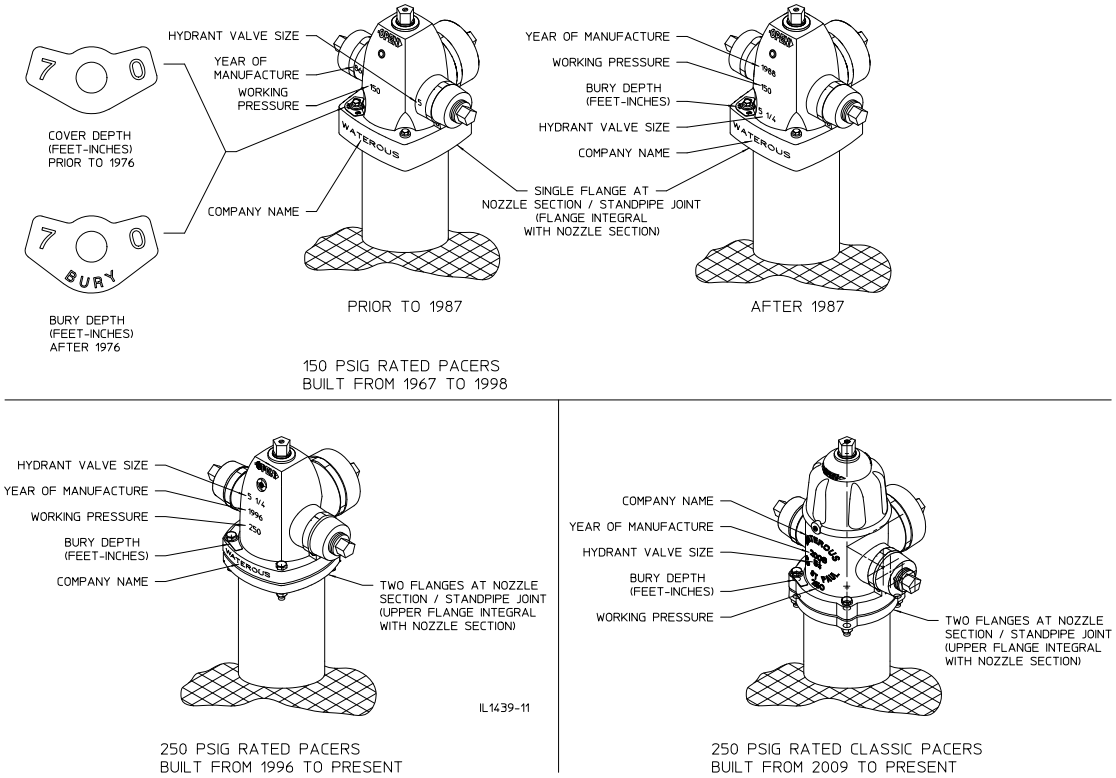

Important Notes

1. Waterous recommends a new rod corresponding to the extended bury or cover depth be installed in place of a rod extension if the hydrants meet one or more of the following criteria:
   a. The length of the rod extension required exceeds 4 ft-0 in.
   b. The hydrant has already been extended. Only one rod extension per hydrant is recommended.
   c. **150 PSIG rated Pacers only:**
   The depth of the extended hydrant will exceed 9 ft-0 in. bury or 8 ft-6 in. cover. Depths of 9 ft-6 in. thru 11 ft-6 in. bury and 9 ft-0 in. through 11 ft-0 in. cover should have a heavy duty (larger diameter) rod installed. Note that 250 PSIG rated Pacers are supplied with heavy duty rods for all depths from the factory.
2. If extended depth of hydrant will exceed 11’-6” bury or 11’-0” cover, a “bottom extension” should be nstalled in place of a standpipe and rod extension.
3. Contact Waterous Company for appropriate parts and guidance if any of the above situations exist.

5-1/4" WATEROUS PACER® - EXTENDING NON-TRAFFIC MODEL

WARNING: Special care should be taken in the installation, inspection and repair of pressure containing devices such as valves and hydrants. FAILURE TO FOLLOW PROPER PRACTICE AND GUIDELINES CAN RESULT IN SERIOUS INJURY OR DEATH. High pressure and water hammer, due to rapid opening or closing of a hydrant or valve, can also cause major damage to the hydrant, valve, water main, fire hose, or other attached equipment.

Note: Where grease is specified, use an AMERICAN Flow Control recommended food-grade grease.

1. Close the hydrant valve. It is considered safe practice to close the auxilliary valve ahead of the hydrant, or use another means to cut off flow and pressure to the hydrant.

250 PSIG Rated Pacers (See Figure 2, Page 2B-39)

2a. At the nozzle section, remove bolts (6A), nuts (6C), and allow flange (62B) to slide down the standpipe. Depth plate and washer (61) will come off with bolts.

150 PSIG Rated Pacers (See Figure 2, Page 2B-39)

2b. At the nozzle section, remove bolts (6A), nuts (6C) and clamps (62) from underneath flange of the nozzle section (60). Depth plate and plain washer (61) will come off with bolts.

Note: If clamps (62) should stick underneath the flange of the nozzle section (60), it may be necessary to carefully drive them out.

3. Turn upper operating nut (17B) or weathershield nut (101) in the opening direction to separate the nozzle section (60) and the support (56). Remove the nozzle section. Use proper handling and lifting techniques to avoid injury.

4. Remove operating nut (17B or 17) from the nozzle section (60). (On hydrants with weathershield, it is necessary to drive out pin (102) and remove weathershield (101) before upper operating nut can be removed.)

Note: Bushing (89) is cemented in nozzle section (60). Removing it is not necessary unless it is damaged. If replacement is necessary, contact the Waterous Company.

5. Unscrew lower operating nut (17A - two - piece nuts, 17 - one-piece nut), and remove support tube (85).

6. Unscrew hex stop nut (86) from operating rod (28), and remove support (56).

250 PSIG Rated Pacers (See Figure 2, Page 2B-41)

7a. Remove lock ring (64) from existing standpipe (29) and slide off flange (62B). Install new flange (63) on existing standpipe (29) and re-install lock ring (64). Retain flange (62B) for installation to standpipe extension (45) in step 9a. Refer to Figure 5 for proper flange operation.

7b. Remove lock ring (64) from original standpipe (29) and install new flange (63). Re-install lock ring (64). Refer to Figure 6 for proper flange orientation.

150 PSIG Rated Pacers (See Figure 3, Page 2B-39)

8. Install rod extension (75) on existing rod (28): Mark threads on existing rod 1-3/4 inch from the end and thread extension (75) down to that mark. Tighten set screws (76) securely. Refer to Figure 6 on Page 2B-42.

250 PSIG Rated Pacers (See Figure 2, Page 2B-39)

9a. Install flange (62B) on the top of standpipe extension (45) and flange (63) on the bottom of standpipe extension (45). Install lock rings (64) in grooves. Refer to 0 for proper flange orientation. Note that flange 62B has four raised protrusions on one side; flange (63) is flat on both sides.

150 PSIG Rated Pacers (See Figure 3, Page 2B-39)

9b. Install flange (63) on the bottom of standpipe extension (45). Install lock rings (64) in grooves. Refer to Figure 6 for proper flange orientation.

10. Install gasket (92) on existing standpipe with lip pointing down. Install standpipe extension (45) on existing standpipe (29). Install bolts (6D) and nuts (6C) through flanges (63) and tighten finger tight. Make sure flanges engage lock rings properly and tighten bolts and nuts evenly. Refer to Figure 5 for 250 PSIG Pacers and Figure 6 for 150 PSIG. Pacers for orientation of standpipe extension.

11. Grease O-ring and gasket grooves in support (56), and install O-rings (59), gaskets (84) and lower tube seal (83). Tape threads of operating rod (28) to protect O-rings. Install support (56) onto operating rod (28), being careful not to damage O-rings on operating rod threads. Remove tape from threads.

12. Install hex stop nut (86), turning it down to end of thread. Snug up with a torque of 30 ft-lbs (30 lb at end of 12 inch wrench).

13. Grease O-ring in upper end of support tube (85). Slide tube down over operating rod (28) until it is seated on support (56).

14. Grease threads of operating rod (28) and lower bearing surface of operating nut (17A or 17). Screw lower operating nut onto rod while centering support (56) on the standpipe. Tighten operating nut (17A or 17) to securely clamp support (56) against standpipe extension (45). Be sure support (56) is centered on standpipe extension (45).

15. Grease and install thrust ring (90) and O-ring (57) in operating nut (17B or 17). If hydrant has a two piece operating nut, set upper operating nut (17B) on lower operating nut (17A) and engage lugs in slots.

250 PSIG Rated Pacers (See Figure 2)

16a. Carefully lower nozzle section (60) over operating nut (17B or 17) until it seats on support (56). Rotate nozzle section (60) to desired position. Install bolts (6A) and nuts (6C) through flange of nozzle section and flange (62B) and tighten finger tight. Be sure to install depth plate and washers (61) in proper position. Also install extension plate (157) opposite the bury depth plate (see 0 on Page 2B-42). Make sure flange (62B) is seated properly with lock ring (64), and tighten all bolts and nuts evenly. Tighten to 60-70 ft-lbs of torque.

150 PSIG Rated Pacers (See Figure 3)

16b. Make sure lock ring (64) is properly installed in standpipe (29). Carefully lower nozzle section (60) over upper operating nut (17B or 17) until it seats on support (56). Rotate nozzle section (60) to desired position. Install clamps (62), bolts (6A) and nuts (6C) in flange of nozzle section and tighten finger tight. Be sure to install depth plate and washers (61) in proper position. Also install extension plate (174) opposite the bury depth plate (see Figure 7 on Page 2B-42). Make sure all clamps are seated properly up under flange, and tighten all bolts and nuts evenly. Tighten to 60-70 ft-lbs of torque.

17. Back off operating nut slightly to release tension on operating rod. Since water pressure will hold valve up against seat, it is not necessary to turn operating nut to a dead stop if the valve and seat are in good condition.

18. Lubricate hydrant as shown in Figure 8 on Page 2B-42.

Note: When a supply of gaskets and O-rings are available, always install new ones when reassembling the hydrant. Clean dirt from O-ring grooves.

Figure 2. Installation Diagram - 250 PSIG Rated Pacer

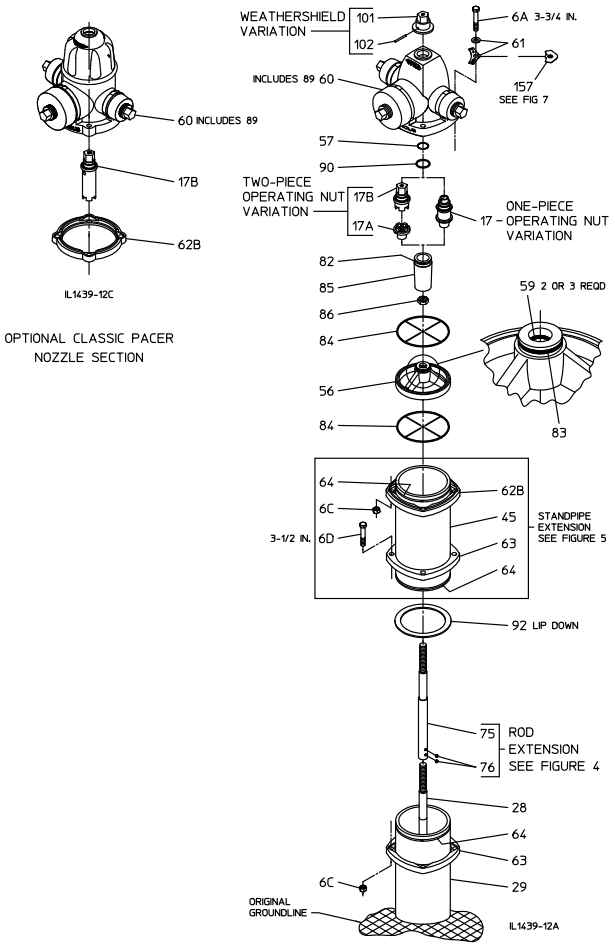

250 PSIG RATED PACER
FIGURE 2

Figure 3. Installation Diagram - 150 P.S.I.G. Rated Pacer

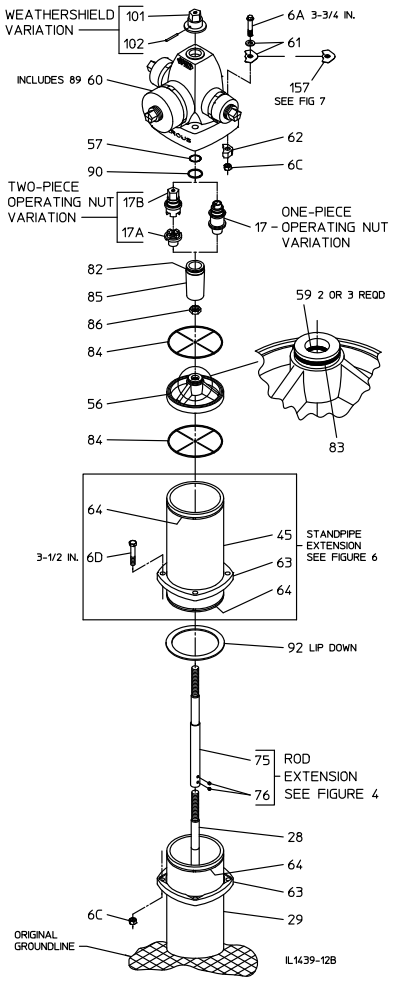

Figure 4. Rod Extension Installation

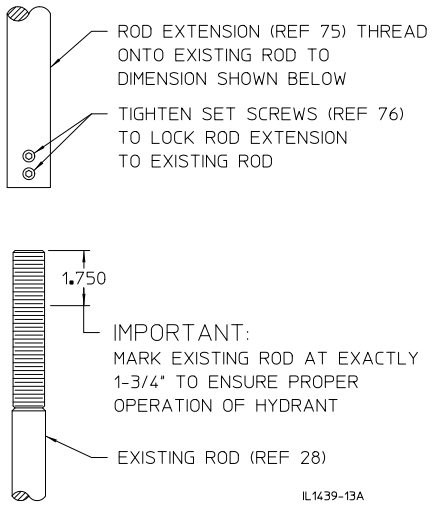

Figure 5. Standpipe / Flange Orientation (250 PSIG)

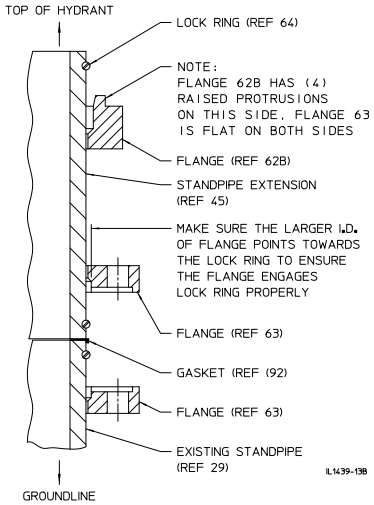

Figure 6. Standpipe / Flange Orientation (150 PSIG)

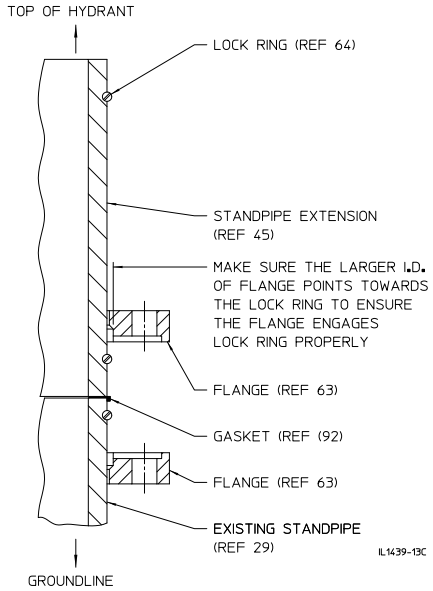

Figure 7. Extension Plate Installation

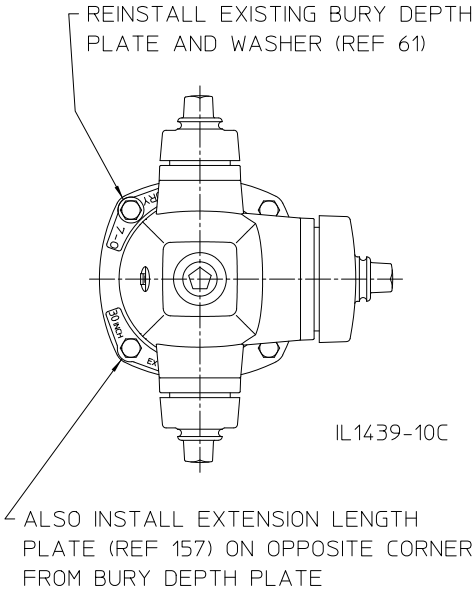

Figure 8. Lubrication Details

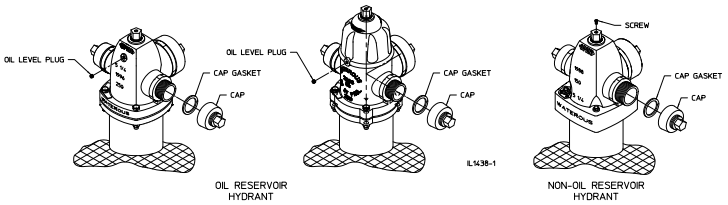

1. Oil Reservoir Hydrants: Remove oil level plug. Add oil to the level of the plug. Use an AMERICAN Flow Control recommended oil.

   Non-Oil Reservoir Hydrants: Remove screw from operating nut and add approximately one tablespoon of oil through opening. Replace screw. Use an AMERICAN Flow Control recommended oil.

2. Remove all nozzle caps, clean rust or corrosion from threads of nozzles and caps. Replace cap gaskets if necessary. Apply a light coat of grease to nozzle threads before replacing cap. Use an AMERICAN Flow Control recommended food grade grease.

5-1/4” WATEROUS PACER® SPECIFICATIONS

Fire hydrants shall meet or exceed ANSI/AWWA C502, latest revision. Rated working pressure shall be 250 psig, test pressure shall be 500 psig and hydrants shall include the following specific design criteria:

- The nozzle section, nozzle caps, operating nut, upper and lower standpipes and hydrant base shall be ductile iron.
- External surfaces above grade shall be factory coated with an epoxy primer and a two-part polyurethane top coating.
- The main valve shall be of the compression type, opening against the pressure and closing with the pressure.
- The nozzle section shall allow easy 360° rotation by the loosening of no more than four bolts.
- The valve opening diameter shall be 5-1/4 in.
- Hydrant shall permit the removal af all working parts through the standpipe without the need for excavation.
- The bronze valve seat shall be threaded into mating threads of bronze for easy field repair.
- Bolting below grade shall be stainless steel.
- The draining system of the hydrant shall be all bronze and be positively activated by the main operating rod.
- Hydrant shall be furnished with a sliding bronze drain valve. Sliding drain valves made of rubber, plastic or leather will not be allowed.
- Hydrant must have an internal travel stop nut located in the top housing of the hydrant.
- Hydrant operating threads shall be factory lubricated by an oil reservoir. Stem O-rings shall be furnished to help keep operating threads lubricated and protected from line fluid and from the weather.
- Hydrants shall be the **5-1/4” Waterous Pacer (Models W67-250 or WB67-250) by** AMERICAN Flow Control.

AMERICAN Flow Control

SECTION 3

RESILIENT WEDGE GATE VALVES 2” - 66”

Series 2500 Ductile Iron **3A-1 through 3A-63**

AMERICAN

FLOW CONTROL

THE RIGHT WAY

INDEX

Series 2500 Ductile Iron Resilient Wedge Gate Valve

INTRODUCTION 3A-2
FEATURES and BENEFITS 3A-3
ORDERING
Dimensions
Standard NRS (2”- 24” Sizes) 3A-4
NRS with Enclosed Miter Gearing (3”-12” Sizes) 3A-5
NRS with Bevel Gears (14” - 66” Sizes) 3A-6
NRS with Spur Gears (14” - 66” Sizes) 3A-7
OS&Y (2” - 24” Sizes) 3A-8
Optional End Connections
Mechanical Joint, TYTON®/Push-On, PVC, Threaded, Flex-Ring®, ALPHA™ 3A-9
Class 125 Flange 3A-10
Class 250 Flange 3A-11
Optional Taps on Class 125 and Class 250 Flange x Flange Bodies 3A-12
Mechanical Joint Accessories 3A-13
Material Specifications/Parts Lists
Standard NRS:
2” 3A-14
2-1/2” & 3” 3A-15
4” - 8” 3A-16
10” & 12” 3A-17
4” - 8” with Alpha™ Restraint Joint 3A-18
10” & 12” with Alpha™ Restraint Joint 3A-19
14” - 24” 3A-20
NRS with Enclosed Miter Gearing:
3”- 12” 3A-21
NRS with Bevel Gears:
14” - 18” 3A-22
20” & 24” 3A-23
30” - 36” 3A-24
42” - 54” 3A-25
60” & 66” 3A-26
NRS with Spur Gears:
14” - 18” 3A-27
20” & 24” 3A-28
30” - 36” 3A-29
42” - 54” 3A-30
60” & 66” 3A-31
OS&Y:
2” 3A-32
2-1/2” & 3” 3A-33
4”- 8” 3A-34
10” & 12” 3A-35
14”—24” 3A-36
Strength of Ductile Iron Valves Versus Gray Iron Valves 3A-37
Weights 3A-38
Submittal Sheet 3A-39

INSTALLATION AND TESTING
Installation & Testing 3A-40
Class 125 Flanged Valve Installation (Applies to 4” thru 12” sizes only) 3A-41
ALPHA™ Restraint Joint Installation (Applies to 4” thru 12” sizes only) 3A-42,3A-43

OPERATION AND MAINTENANCE
Operation, Maintenance, Spare Parts 3A-44
Troubleshooting Guide 3A-45
REPAIRS
NRS:
2”, 2-1/2” & 3” 3A-46, 3A-47, 3A-48
4”- 8” 3A-49, 3A-50
10” & 12” 3A-51, 3A-52
NRS with Enclosed Miter Gearing 3A-53, 3A-54
OS&Y:
2” 3A-55, 3A-56
2-1/2” & 3” 3A-57, 3A-58
4”—8” 3A-59, 3A-60
10”—24” 3A-61, 3A-62
SPECIFICATIONS 3A-63

SERIES 2500 RESILIENT WEDGE GATE VALVE

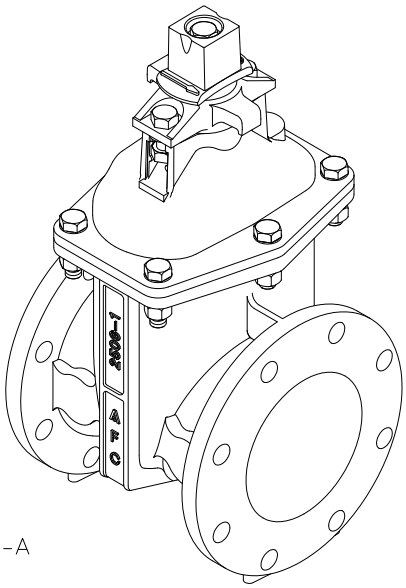

IL2524-A

The **Series 2500 Ductile Iron** Resilient Wedge Gate Valve has a rated working pressure of 250 psig and is designed for use in drinking water, sewage, fire protection systems, and irrigation and backflow control systems.

The **Series 2500** Resilient Wedge Gate Valve can be furnished in configurations that are UL Listed and FM Approved.

FEATURES AND BENEFITS

FEATURES

AMERICAN Flow Control's Series 2500 Ductile Iron Resilient Wedge Gate Valves are suitable for use in drinking water, sewage and fire protection systems. The Series 2500 has a rated working pressure of 250 psig and seal with zero leakage. The design employs a clear unobstructed waterway.

ADVANTAGES WHEN COMPARED TO BUTTERFLY VALVES

- The 2500 has no disc in waterway to restrict flow or to increase pumping costs.
- The clear waterway allows passage of pigging devices.
- Internal parts can be serviced without cutting the valve out of the pipeline.
- The 250 psig rating allows working pressure to be increased above the 150 psig pressure rating found on most butterfly valves.

ADVANTAGES WHEN COMPARED TO DOUBLE DISC GATE VALVES

- The 2500 closes with zero leakage. No more time consuming testing to determine allowable leakage rate.
- No pocket in bottom of valve to collect sediment or trap debris.
- Lower torque requirements to operate valve.
- 250 psig pressure rating compared to the 200 psig rating found on most double disc gate valves.
- Fusion bonded epoxy coated inside and out.
- Lower total valve weight.

SERIES 2500 RESILIENT WEDGE GATE VALVE STANDARD FEATURES

- 250 psig rated working pressure.
- Ductile iron body, bonnet, wedge, operating nut and stuffing box.
- Triple O-ring stem seals.
- Thrust washers.
- Fusion bonded epoxy coating.
- 100% bottle tight closure.
- Rubber encapsulated wedge.
- Flat features on valve body allows the valve to stand upright for storage or, during installation.
- Optional geared actuators.
- 2 in.–66 in. valves are Certified to NSF/ANSI Standard 61 and NSF/ANSI 372.

BENEFITS

DUCTILE IRON CONSTRUCTION

The ductile iron body and bonnet provide superior strength and allow a pressure rating of 250 psig. The strength of ductile iron is double that provided by gray iron. This added strength and higher pressure rating is provided in a compact, lighter design.

FUSION BONDED EPOXY COATING

The Series 2500 valve is epoxy coated both on the interior as well as the exterior of the valve. The fusion bonded coating is applied after the valve body is shot blasted clean. The coating is applied to all ferrous surfaces so that even the bolt holes and body-to-bonnet flange surfaces are epoxy coated.

THRUST WASHERS

Thrust washers are located above and below the stem collar ensuring trouble-free operation of the valve.

DUCTILE IRON LIFTING LUGS

The stuffing box is constructed of high strength ductile iron with integral lifting lugs on most sizes. Lifting lugs allow the valve to be lifted safely, without risk of the valve falling or damaging the valve by lifting from the operating nut.

TRIPLE O-RING STEM SEALS

This valve features triple O-ring stem seals. Two O-rings are located above the thrust collar and one O-ring is located below the thrust collar. The O-ring directly above and below the stem collar provide a sealed lubrication chamber. This feature assures the ease of operation for long periods of time without the need for constant maintenance required for other designs. The upper O-ring acts as a shield, sealing the stem from dirt and grit that might otherwise enter the stuffing box in buried and sewage service applications.

NO FLAT GASKETS

The stuffing box gasket and bonnet gasket are pressure energized rubber O-rings. This assures sealing of the valve components without the need for excessive bolt loading as is required by flat gaskets. The O-ring seals are reusable, which eliminates the need for time consuming cleaning, scrapping and cutting of new gaskets.

AVAILABLE IN UL AND FM CONFIGURATIONS

The Series 2500 valve can be furnished in configurations that are UL Listed and Approved by FM Approvals.
Configurations not available as UL/FM:

- NRS with handwheel
- Open right (NRS or OS & Y)
- NRS with gearing
- 2 in. NRS

SERIES 2500 - STANDARD NRS DIMENSIONS, 2”–24” SIZES

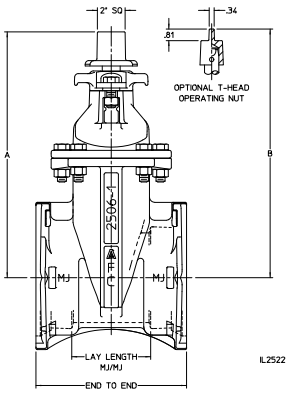

SHOWN WITH 2" OPERATING NUT

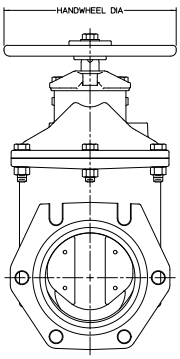

SHOWN WITH OPTIONAL HANDWHEEL
NOT AVAILABLE IN UL/FM

Dimension	Series 2500 / Series 2500-1												
	2”	2-1/2”	3”	4”	6”	8”	10”	12”	14”	16”	18”	20”	24”
A	8.44	11.03	11.84	13.91	17.12	20.47	24.06	27.59	33.25	36.75	39.62	43.25	51.25
B	9.36	12.00	N/A	N/A	N/A	N/A	N/A	N/A	N/A	N/A	N/A	N/A	N/A
C Waterway Diameter	2.06	2.50	3.19	4.25	6.25	8.25	10.25	12.25	14.19	16.19	18.12	20.12	24.12
End to End - MJ/MJ	7.75	N/A	8.62	10.00	10.50	11.50	12.50	13.50	20.50	20.88	23.00	23.50	25.62
Lay Length - MJ/MJ	2.75	N/A	3.62	5.00	5.50	6.50	7.50	8.50	13.50	13.88	16.00	16.50	18.62
End to End - FL/FL (Class 125)	7.00	7.50	8.00	9.00	10.50	11.50	13.00	14.00	15.00	16.00	17.00	18.00	20.00
End to End - FL/FL (Class 250)	N/A	N/A	11.12	12.00	15.88	16.50	18.00	19.75	18.50	21.00	22.00	24.00	26.38
End to End - TY/TY	N/A	N/A	N/A	13.00	15.88	17.50	18.75	19.75	N/A	N/A	N/A	N/A	N/A
End to End - PO/PO (Push-On)	N/A	N/A	N/A	N/A	N/A	N/A	N/A	N/A	22.16	24.66	N/A	N/A	N/A
End to End - FL/MJ (Class 125)	N/A	N/A	8.31	9.50	10.50	12.38	13.62	14.38	17.75	18.44	20.00	20.75	22.81
End to End - FL/TY (Class 125)	N/A	N/A	N/A	11.00	13.19	14.50	15.88	16.88	N/A	N/A	N/A	N/A	N/A
End to End - PVC/PVC	10.75	11.12	11.38	13.00	15.88	17.50	N/A	N/A	N/A	N/A	N/A	N/A	N/A
End to End - Threaded	5.0	7.38	7.38	N/A	N/A	N/A	N/A	N/A	N/A	N/A	N/A	N/A	N/A
End to End - FX/FX (Flex-Ring®)	N/A	N/A	N/A	N/A	17.00	N/A	N/A	N/A	N/A	28.50	N/A	31.50	34.50
Lay Length - FX/FX (Flex-Ring®)	N/A	N/A	N/A	N/A	5.50	N/A	N/A	N/A	N/A	13.62	N/A	15.12	16.62
End to End - AA/AA (ALPHA™)	N/A	N/A	N/A	11.34	12.81	16.22	17.34	18.96	N/A	N/A	N/A	N/A	N/A
Lay Length - AA/AA (ALPHA™)	N/A	N/A	N/A	4.24	5.32	6.37	7.15	8.31	N/A	N/A	N/A	N/A	N/A
End to End - AX/AX (ALPHA™ XL)	N/A	N/A	N/A	12.64	13.40	17.38	18.30	20.27	N/A	N/A	N/A	N/A	N/A
Lay Length - AX/AX (ALPHA™ XL)	N/A	N/A	N/A	4.24	5.32	6.37	7.15	8.31	N/A	N/A	N/A	N/A	N/A
End to End -FL(Class 125)/AA(ALPHA™)	N/A	N/A	N/A	10.82	11.95	14.44	15.65	17.14	N/A	N/A	N/A	N/A	N/A
Lay Length -FL(Class 125)/AA(ALPHA™)	N/A	N/A	N/A	6.62	7.91	8.93	10.07	11.15	N/A	N/A	N/A	N/A	N/A
End to End - MJ/AA (ALPHA™)	N/A	N/A	N/A	N/A	11.95	N/A	N/A	N/A	N/A	N/A	N/A	N/A	N/A
Lay Length - MJ/AA (ALPHA™)	N/A	N/A	N/A	N/A	5.41	N/A	N/A	N/A	N/A	N/A	N/A	N/A	N/A
Handwheel Diameter	7.00	8.00	8.00	10.00	12.00	14.00	16.00	16.00	20.00	20.00	20.00	28.00	28.00
No. of Turns to Open	9	11	13	14	20	26	32	38	44	50	56	62	76

NOTES:
1. 3 in.–54 in. valves meet or exceed requirements of ANSI/AWWA C515.
2. 2 in.–24 in. valves may be ordered in configurations which are UL Listed and FM Approved.
3. 2 in.–48 in. valves have 250 psig AWWA rated working pressure.
4. 2 in.–24 in. valves in Listed and Approved configurations have 250 psig UL and FM rated working pressure.
5. Fusion bonded epoxy coating meets or exceeds requirements of ANSI/AWWA C550.
6. Bolt patterns of Class 125 flanged ends are in accordance with ANSI/AWWA C110/A21.10 (ASME B16.1 Class 125).
7. Threaded ends are in accordance with ASME B16.4, Class 125.
8. Mechanical joint ends are in accordance with ANSI/AWWA C111/A21.11.
9. Push-on ends are in accordance with ANSI/AWWA C111/A21.11 for use on ductile iron pipe sizes. Valves are furnished with TYTON® (TY) ends.
10. TYTON® is a registered trademark of United States Pipe and Foundry Co., LLC.
11. PVC ends are suitable for use on steel (IPS) sizes of PVC or steel pipe.
12. 2 in.–66 in. valves are Certified to NSF/ANSI Standard 61 and NSF/ANSI 372.
13. Valves for use with raw sewage should be orientated with valve stems vertical.
14. ALPHA™ is a trademark of Romac Industries, Inc. (U.S. Patent 8,894,100)
15. 6” Flex-Ring® and MJ x ALPHA™ valves for use on hydrant leads.

SERIES 2500 - NRS WITH ENCLOSED MITER GEARING DIMENSIONS, 3”–12” SIZES

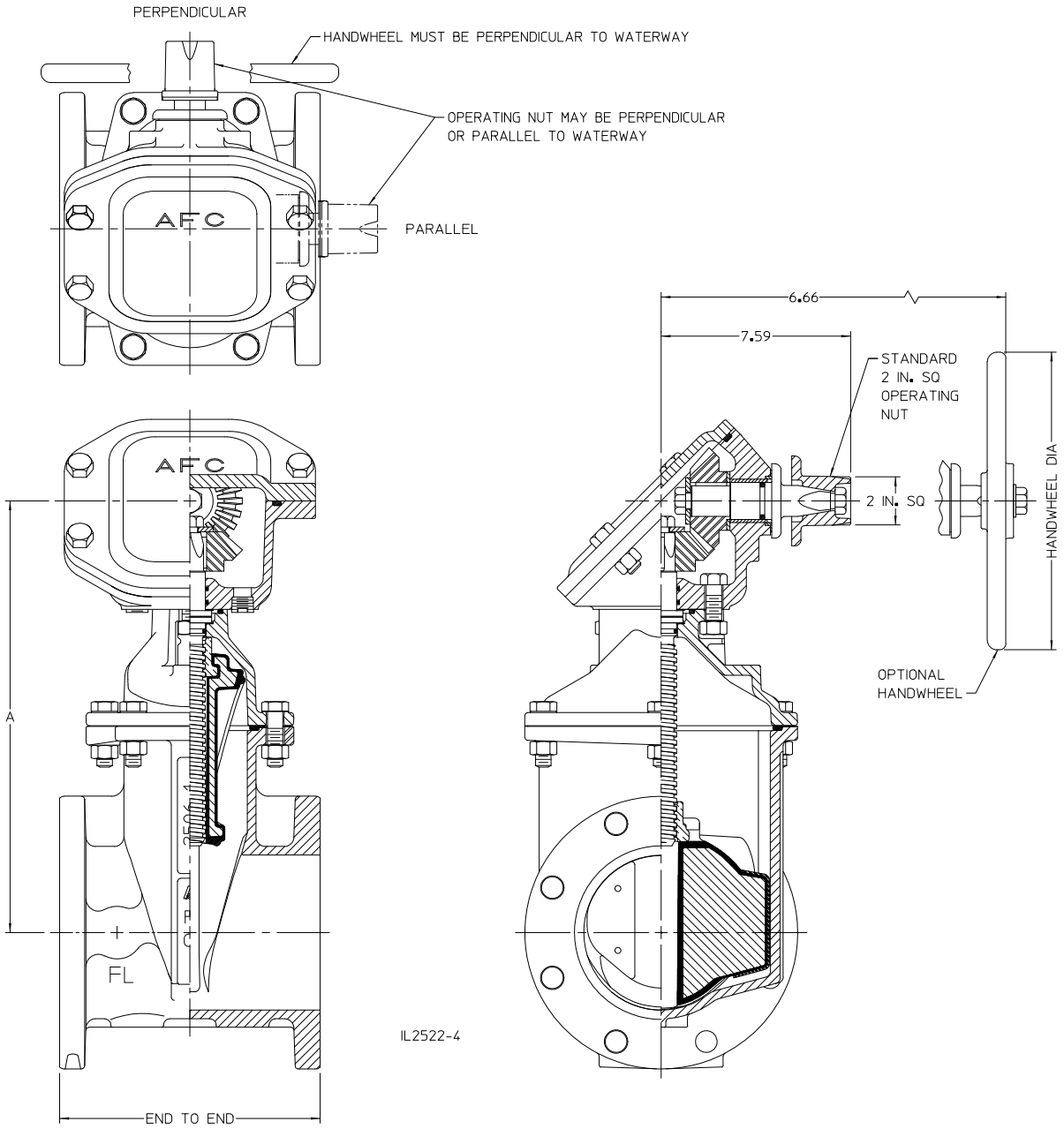

Model	Valve Size	Dimension		
		A	End to End Flange x Flange	Handwheel Diameter
Series 2500	3”	12.72	8.00	8.00
Series 2500-1	4”	14.16	9.00	10.00
	6”	17.03	10.50	12.00
	8”	20.59	11.50	14.00
	10”	24.22	13.00	14.00
	12”	27.66	14.00	14.00

SERIES 2500 - NRS WITH BEVEL GEARING DIMENSIONS, 14”–66” SIZES

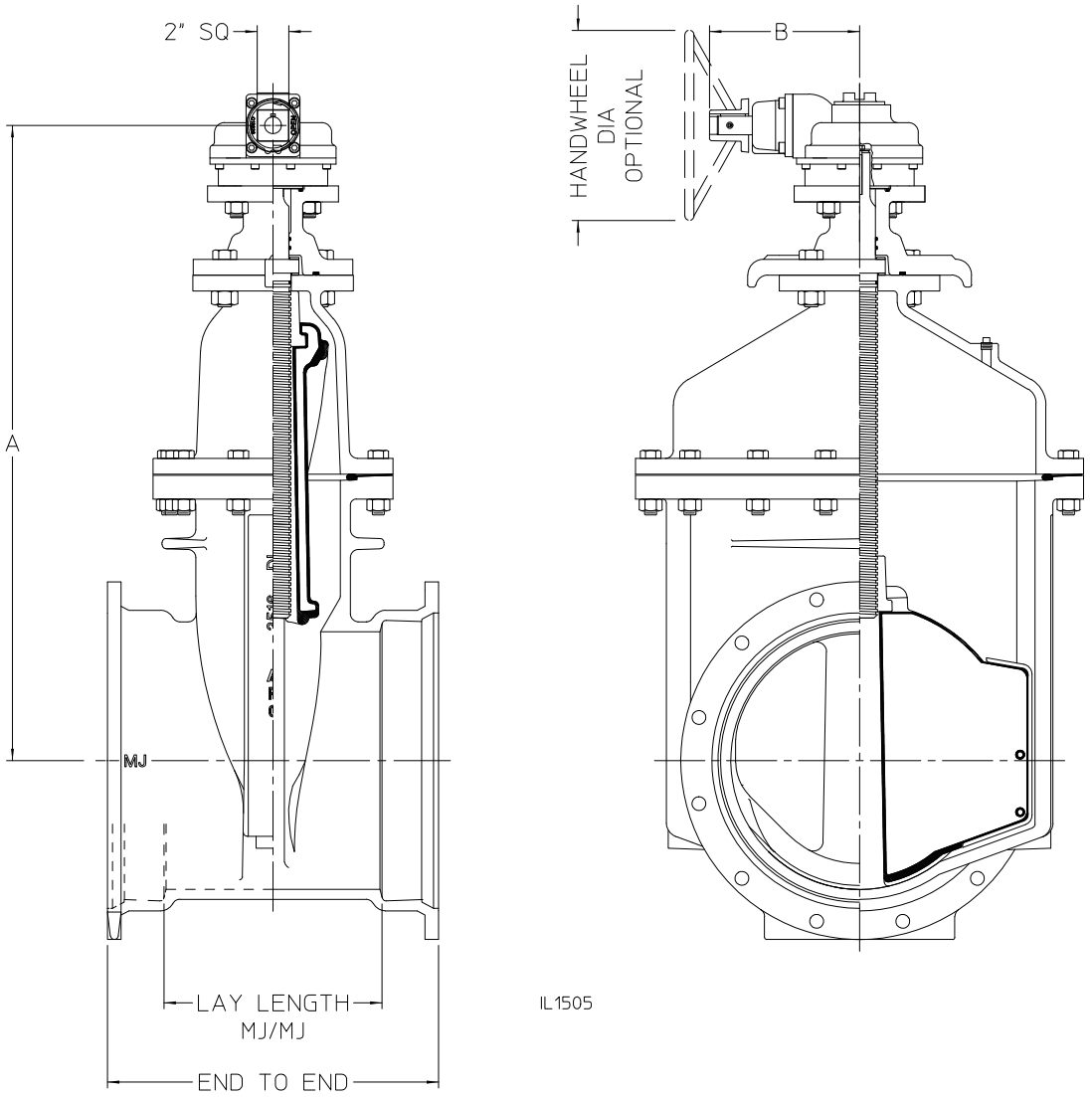

Dimension	Valve Size											
	Series 2500											
	14”	**16”**	**18”**	**20”**	**24”**	**30”**	**36”**	**42”**	**48”**	**54”**	**60”**	**66”**
A	35.19	39.75	43.00	44.44	52.62	62.62	74.38	86.28	96.00	96.00	118.00	118.00
B	9.50	9.50	9.50	10.38	10.38	13.56	15.38	19.19	19.19	19.19	19.19	19.19
C Waterway Diameter	14.19	16.19	18.12	20.12	24.12	30.22	36.19	42.38	48.38	48.38	60.50	60.50
End to End - MJ/MJ	20.50	20.88	23.00	23.50	25.62	33.75	37.50	46.75	45.00	N/A	N/A	N/A
Lay Length - MJ/MJ	13.50	13.88	16.00	16.50	18.62	25.75	29.50	38.75	37.00	N/A	N/A	N/A
End to End - FL/FL (Class 125)	15.00	16.00	17.00	18.00	20.00	26.00	30.00	38.00	43.00	48.00	53.00	58.00
End to End - FL/FL (Class 250)	18.50	21.00	22.00	24.00	26.38	32.00	37.00	40.00	46.25	N/A	N/A	N/A
End to End - PO/PO (Push-On)	22.16	24.66	N/A	N/A	N/A	N/A	N/A	N/A	N/A	N/A	N/A	N/A
End to End - FL/MJ (Class 125)	17.75	18.44	20.00	20.75	22.81	29.88	22.75	42.38	44.00	N/A	N/A	N/A
End to End - FX/FX (Flex-Ring®)	N/A	28.50	N/A	31.50	34.50	41.00	44.50	53.50	62.00	N/A	71.00	N/A
Lay Length - FX/FX (Flex-Ring®)	N/A	13.62	N/A	15.12	16.62	21.75	25.19	31.75	37.25	N/A	44.88	N/A
Handwheel Diameter	12.00	12.00	12.00	20.00	20.00	20.00	20.00	32.00	32.00	32.00	36.00	36.00
No. of Turns to Open	88	100	112	186	228	379	448	694	789	789	984	984

SERIES 2500 - NRS WITH SPUR GEARING DIMENSIONS, 14”–66” SIZES

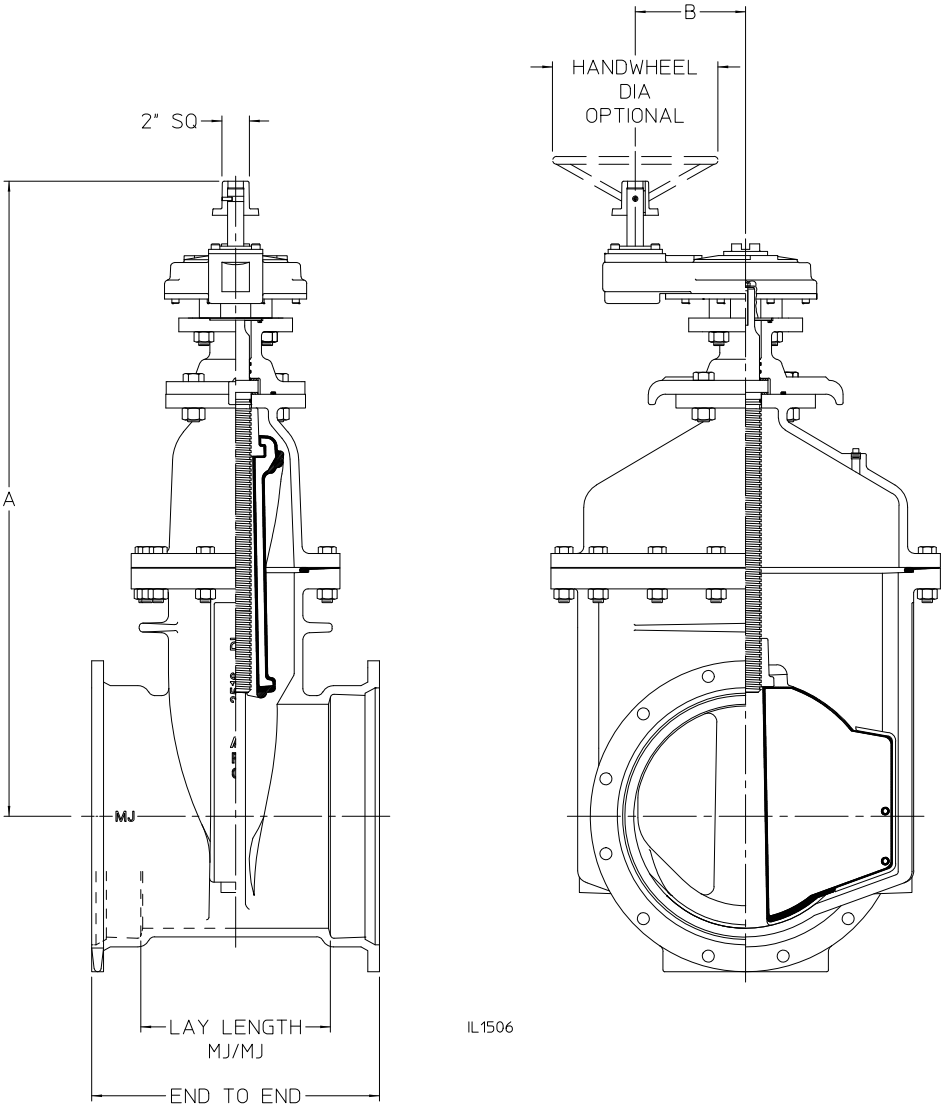

Dimension	Valve Size											
	Series 2500											
	14”	**16”**	**18”**	**20”**	**24”**	**30”**	**36”**	**42”**	**48”**	**54”**	**60”**	**66”**
A	42.00	45.50	51.38	49.50	57.63	71.00	83.00	98.75	108.50	108.50	128.31	128.31
B	8.03	8.03	8.03	12.00	12.00	13.12	14.00	16.12	16.12	16.12	16.00	16.00
C Waterway Diameter	14.19	16.19	18.12	20.12	24.12	30.22	36.19	42.38	48.38	48.38	60.50	60.50
End to End - MJ/MJ	20.50	20.88	23.00	23.50	25.62	33.75	37.50	46.75	45.00	N/A	N/A	N/A
Lay Length - MJ/MJ	13.50	13.88	16.00	16.50	18.62	25.75	29.50	38.75	37.00	N/A	N/A	N/A
End to End - FL/FL (Class 125)	15.00	16.00	17.00	18.00	20.00	26.00	30.00	38.00	43.00	48.00	53.00	58.00
End to End - FL/FL (Class 250)	18.50	21.00	22.00	24.00	26.38	32.00	37.00	40.00	46.25	N/A	N/A	N/A
End to End - PO/PO (Push-On)	22.16	24.66	N/A	N/A	N/A	N/A	N/A	N/A	N/A	N/A	N/A	N/A
End to End - FL/MJ (Class 125)	17.75	18.44	20.00	20.75	22.81	29.88	22.75	42.38	44.00	N/A	N/A	N/A
End to End - FX/FX (Flex-Ring®)	N/A	28.50	N/A	31.50	34.50	41.00	44.50	53.50	62.00	N/A	71.00	N/A
Lay Length - FX/FX (Flex-Ring®)	N/A	13.62	N/A	15.12	16.62	21.75	25.19	31.75	37.25	N/A	44.88	N/A
Handwheel Diameter	12.00	12.00	12.00	20.00	20.00	20.00	20.00	32.00	32.00	32.00	36.00	36.00
No. of Turns to Open	88	100	112	186	228	379	448	694	798	798	984	984

SERIES 2500 - OS & Y DIMENSIONS, 2”–24” SIZES

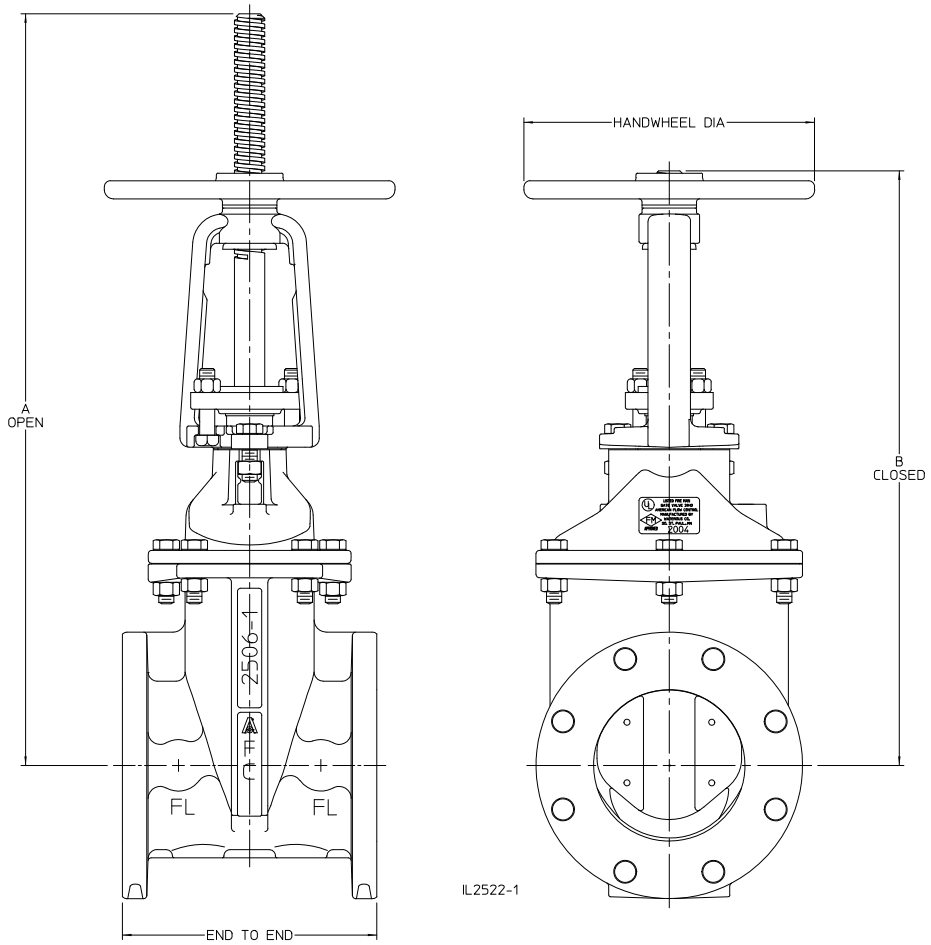

Dimensions	Valve Size												
	Series 2500 / Series 2500-1												
	2”	2-1/2”	3”	4”	6”	8”	10”	12”	14”	16”	18”	20”	24”
A (Valve Open) +/- 1/4	13.28	16.78	18.12	23.47	30.97	38.16	48.41	53.66	66.13	72.00	81.25	87.50	105.25
B (Valve Closed) +/- 1/4	11.06	14.12	14.94	19.12	24.59	29.91	38.16	41.78	51.75	55.25	62.63	66.81	79.88
Handwheel Diameter	7.00	8.00	8.00	10.00	12.00	14.00	16.00	16.00	20.00	20.00	20.00	28.00	28.00
End to End - FL/FL (Class 125)	7.00	7.50	8.00	9.00	10.50	11.50	13.00	14.00	15.00	16.00	17.00	18.00	20.00
No. of Turns to Open	9	11	13	14	20	25	31	38	44	50	56	62	76
End to End - FL/FL (Class 250)	N/A	N/A	11.12	12.00	15.88	16.50	18.00	19.75	18.50	21.00	22.00	24.00	26.38

NOTES:

1. Valves meet or exceed requirements of ANSI/AWWA C515 in applicable sizes.
2. 2 in.–18 in. sizes may be ordered in configurations that are UL Listed and Approved by FM Approvals.
3. 20 in.–24 in. sizes available in configurations that are UL Listed.
4. 250 psig rated working pressure.
5. Fusion bonded epoxy coating meets or exceeds requirements of ANSI/AWWA C550.
6. Bolt patterns of Class 125 flanged ends are in accordance with ANSI/AWWA C110/A21.10 (ASME B16.1 Class 125).
7. Class 250 flanged ends are in accordance with ASME B16.1, Class 250 for cast iron flanges.
8. 2 in.–24 in. valves are Certified to NSF/ANSI Standard 61 and NSF/ANSI 372.

SERIES 2500 - OPTIONAL END CONNECTIONS, ALL SIZES

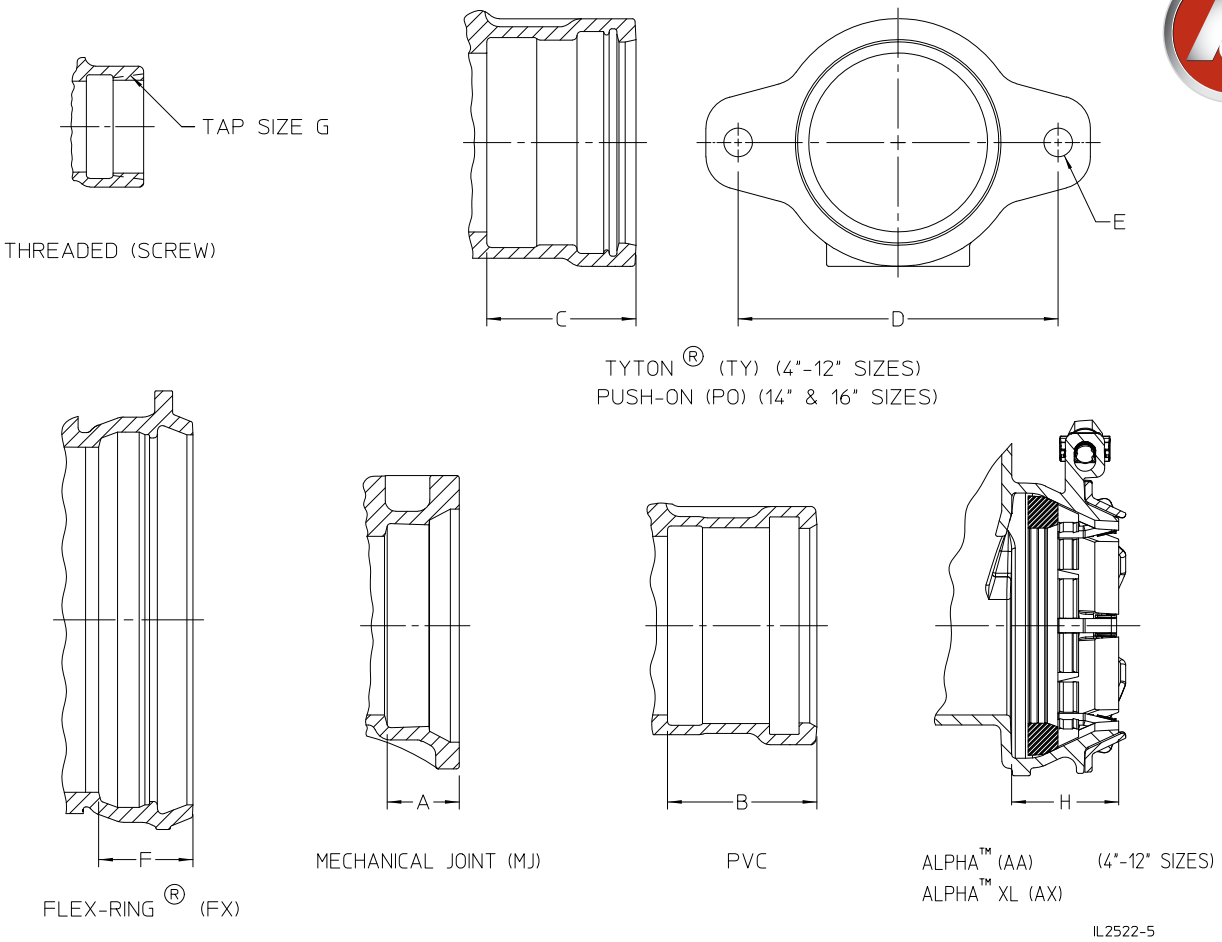

Dimension	Valve Size																			
	Series 2500 / Series 2500-1																			
	2"	2-1/2"	3"	4"	6"	8"	10"	12"	14"	16"	18"	20"	24"	30"	36"	42"	48"	54"	60"	66"
A (MJ)	2.50	N/A	2.50	2.50	2.50	2.50	2.50	2.50	3.50	3.50	3.50	3.50	3.50	4.00	4.00	4.00	4.00	N/A	N/A	N/A
B (PVC)	1.06	4.00	4.00	4.00	5.22	5.50	N/A	N/A	N/A	N/A	N/A	N/A	N/A	N/A	N/A	N/A	N/A	N/A	N/A	N/A
C (PO)	N/A	N/A	N/A	N/A	N/A	N/A	N/A	N/A	5.62	5.62	N/A	N/A	N/A	N/A	N/A	N/A	N/A	N/A	N/A	N/A
C (TY)	N/A	N/A	N/A	4.00	5.22	5.50	5.62	5.62	N/A	N/A	N/A	N/A	N/A	N/A	N/A	N/A	N/A	N/A	N/A	N/A
D (TY)	N/A	N/A	N/A	9.00	11.19	13.50	15.88	18.00	N/A	N/A	N/A	N/A	N/A	N/A	N/A	N/A	N/A	N/A	N/A	N/A
E DIA. (TY)	N/A	N/A	N/A	1.00	1.00	1.00	1.31	1.31	1.31	N/A	N/A	N/A	N/A	N/A	N/A	N/A	N/A	N/A	N/A	N/A
F (FX)	N/A	N/A	N/A	N/A	5.75	N/A	N/A	N/A	N/A	7.44	N/A	8.19	8.94	9.62	9.66	10.88	12.38	N/A	13.06	N/A
G (Threaded)	2" NPT	2-1/2" NPT	3" NPT	N/A	N/A	N/A	N/A	N/A	N/A	N/A	N/A	N/A	N/A	N/A	N/A	N/A	N/A	N/A	N/A	N/A
H (AA) ALPHA™	N/A	N/A	N/A	3.55	3.74	4.92	5.09	5.32	N/A	N/A	N/A	N/A	N/A	N/A	N/A	N/A	N/A	N/A	N/A	N/A
H (AX) ALPHA XL™	N/A	N/A	N/A	4.20	4.04	5.50	5.57	5.98	N/A	N/A	N/A	N/A	N/A	N/A	N/A	N/A	N/A	N/A	N/A	N/A
Class 125 Flange	X	X	X	X	X	X	X	X	X	X	X	X	X	X	X	X	X	X	X	X
Class 250 Flange	N/A	N/A	X	X	X	X	X	X	X	X	X	X	X	X	X	X	X	N/A	N/A	N/A

"X" denotes Class 125 and Class 250 flange ends are available for sizes indicated.

NOTE:

1. Class 125 flange end dimensions and Class 250 flange end dimensions are shown on separate pages. See Class 125 flange dimensions on page 3A-10 and Class 250 flange dimensions on page 3A-11.
2. Push-on ends are in accordance with ANSI/AWWA C111/A21.11 for use on ductile iron pipe sizes. Valves are furnished with TYTON® (TY) ends. TYTON® is a registered trademark of United States Pipe and Foundry Co., LLC.
3. ALPHA™ is a trademark of Romac Industries, Inc. (U.S. Patent 8,894,100)

SERIES 2500 - CLASS 125 FLANGE DIMENSIONS

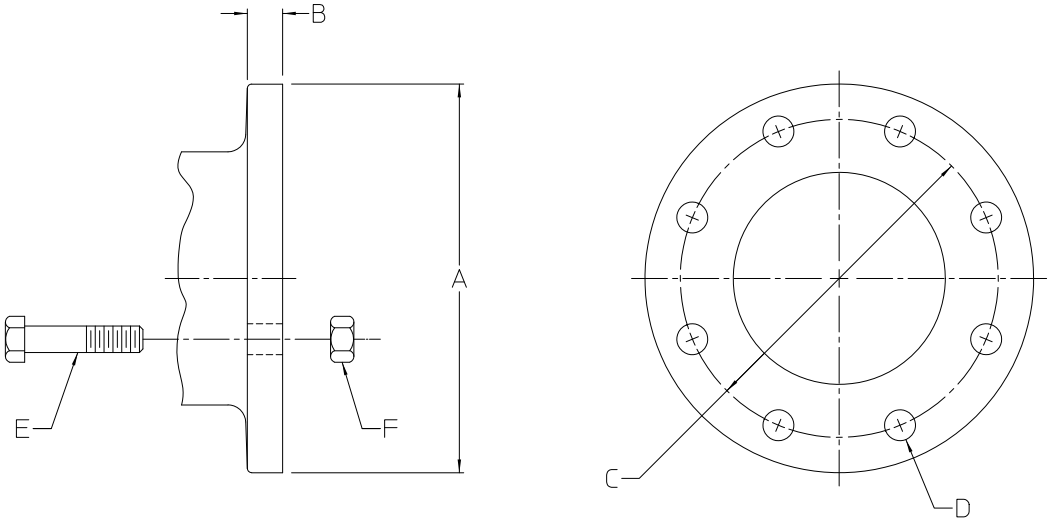

IL1451

Model	Valve Size	A	B	C	D		E	F
		Diameter of Flange	Flange Thickness	Bolt Circle Diameter	Bolt Holes		Bolt Size See Note 2	No. of Hex Nuts Required
					No.	Size		
Series 2500 Series 2500-1	2”	6.00	.62	4.75	4	.75	5/8-11 x 2-1/2	4
	2-1/2”	7.00	.69	5.50	4	.75	5/8-11 x 2-1/2	4
	3”	7.50	.75 ±.12	6.00	4	.75	5/8-11 x 2-1/2	4
	4”	9.00	.94 ±.12	7.50	8	.75	5/8-11 x 3	8
	6”	11.00	1.00 ±.12	9.50	8	.88	3/4-10 x 3-1/2	8
	8”	13.50	1.12 ±.12	11.75	8	.88	3/4-10 x 3-1/2	8
	10”	16.00	1.19 ±.12	14.25	12	1.00	7/8-9 x 4	12
	12”	19.00	1.25 ±.12	17.00	12	1.00	7/8-9 x 4	12
	14”	21.00	1.38 ±.19	18.75	12	1.12	1”-8 x 4-1/2	12
	16”	23.50	1.44 ±.19	21.25	16	1.12	1”-8 x 4-1/2	16
	18”	25.00	1.56 ±.19	22.75	16	1.25	1-1/8-7 x 5	16
	20”	27.50	1.69 ±.19	25.00	20	1.25	1-1/8-7 x 5	20
	24”	32.00	1.88 ±.19	29.50	20	1.38	1-1/4-7 x 5-1/2	20
	30”	38.75	2.12 ±.25	36.00	28	1.38	1-1/4-7 x 6-1/2	28
	36”	46.00	2.38 ±.25	42.75	32	1.62	1-1/2-6 x 7	32
	42”	53.00	2.62 ±.25	49.50	36	1.62	1-1/2-6 x 7-1/2	36
	48”	59.50	2.75 ±.25	56.00	44	1.62	1-1/2-6 x 8	44
	54”	66.25	3.00 ±.25	62.75	44	2.00	1-3/4-5 x 8-1/2	44
	60”	73.00	3.12 ±.25	69.25	52	2.00	1-3/4-5 x 9	52
	66”	80.00	3.38 ±.25	76.00	52	2.00	1-3/4-5 x 9-1/2	52

NOTES:

1. Bolt patterns of Class 125 flanged ends are in accordance with ANSI/AWWA C110/A21.10(ASME B16.1 Class 125) Flange thickness tolerances shown are per ANSI/AWWA C110/A21.10.
2. Bolt lengths shown are for standard cast iron flange thicknesses with through holes. Steel or ductile iron flanges with reduced thickness or valves or fittings with tapped holes may require shorter bolts.

SERIES 2500 - CLASS 250 FLANGE DIMENSIONS

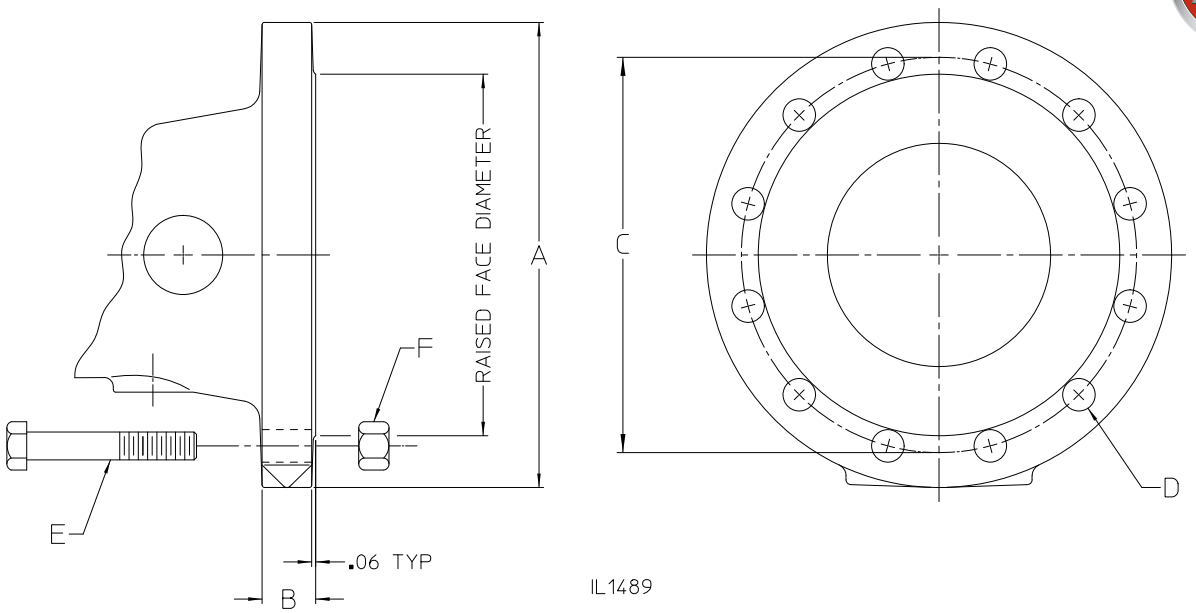

Model	Valve Size	A	B	C	D		E	F	Raised Face Dia.
		Diameter of Flange	Flange Thickness	Bolt Circle Diameter	Bolt Holes		Bolt Size See Note 2	No. of Hex Nuts Required	
					No.	Size			
Series 2500	3”	8.25	1.12	6.62	8	.88	3/4-10 x 3-1/2	8	5.69
Series 2500-1	4”	10.00	1.25	7.88	8	.88	3/4-10 x 4	8	6.94
	6”	12.50	1.44	10.62	12	.88	3/4-10 x 4	12	9.69
	8”	15.00	1.62	13.00	12	1.00	7/8-9 x 4-1/2	12	11.94
	10”	17.50	1.88	15.25	16	1.12	1”-8 x 5-1/2	16	14.06
	12”	20.50	2.00	17.75	16	1.25	1-1/8-7 x 5-1/2	16	16.44
Series 2500	14”	23.00	2.12	20.25	20	1.25	1-1/8-7 x 6	20	18.94
	16”	25.50	2.25	22.50	20	1.38	1-1/4-7 x 6-1/2	20	21.06
	18”	28.00	2.38	24.75	24	1.38	1-1/4-7 x 6-1/2	24	23.31
	20”	30.50	2.50	27.00	24	1.38	1-1/4-7 x 7	24	25.56
	24”	36.00	2.75	32.00	24	1.62	1-1/2-7 x 7-1/2	24	30.31
	30”	43.00	3.00	39.25	28	2.00	1-3/4 x 8-1/2	28	37.19
	36”	50.00	3.38	46.00	32	2.25	2-4-1/2 x 9-1/2	32	43.69
	42”	57.00	3.69	52.75	36	2.25	2-4-1/2 x 10	36	50.44
	48”	65.00	4.00	60.75	40	2.25	2-4-1/2 x 11	40	58.44
	54”	Not Available with Class 250 Raised Face Flanged Ends							
	60”								
	66”								

NOTES:

1. Flange dimensions shown are per ASME B16.1, Class 250 for cast iron flanges.
2. Bolt lengths shown are for standard cast iron flange thicknesses with thru holes. Steel or ductile iron flanges with reduced thickness or valves or fittings with tapped holes may require shorter bolts.

SERIES 2500 - OPTIONAL TAPS ON CLASS 125 & CLASS 250 FLANGE X FLANGE BODIES

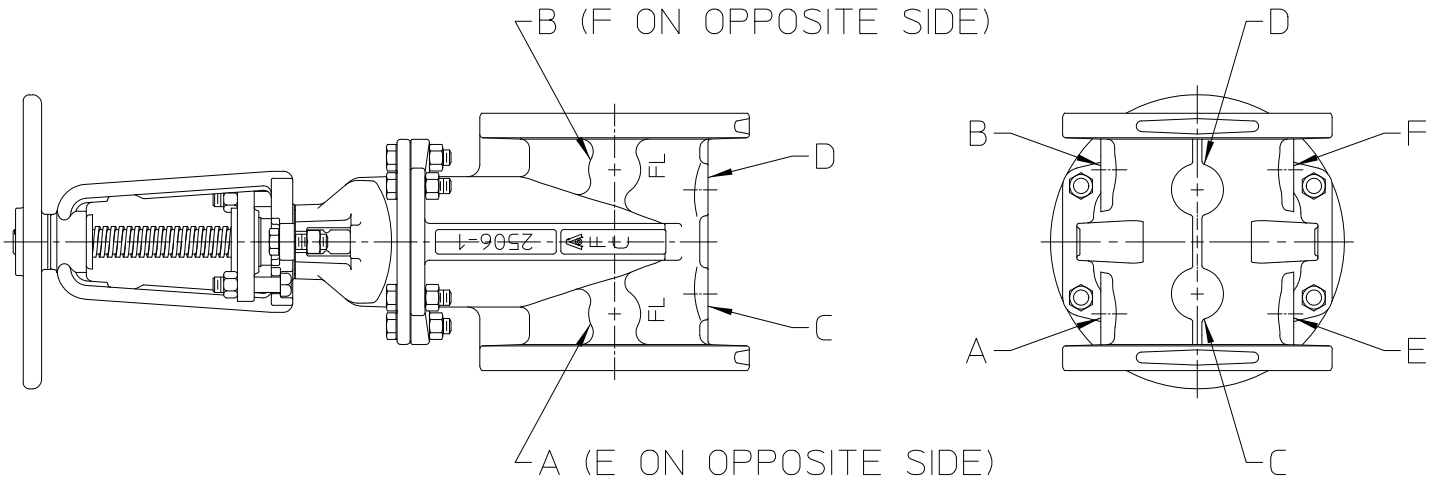

LOCATION OF POSSIBLE TAPS
ON FLANGE X FLANGE VALVES

IL2522-6

Model	Valve Size	Available Tap Sizes for Boss Locations A, B, C, D, E &F
Series 2500 Series 2500-1	2”	1/2 NPT
	2-1/2”	1/2, 3/4 NPT
	3”	1/2, 3/4 NPT
	4”	1/2, 3/4, 1” NPT
	6”	1/2, 3/4, 1” NPT
	8”	1/2, 3/4, 1” NPT
	10”	1/2, 3/4, 1” NPT
	12”	1/2, 3/4, 1” NPT

NOTES:

1. Valve body tap locations are in accordance with MSS SP-45.
2. Taps are available on any valve with flanged ends, whether it is an NRS or OS&Y valve.

SERIES 2500 - MECHANICAL JOINT ACCESSORIES

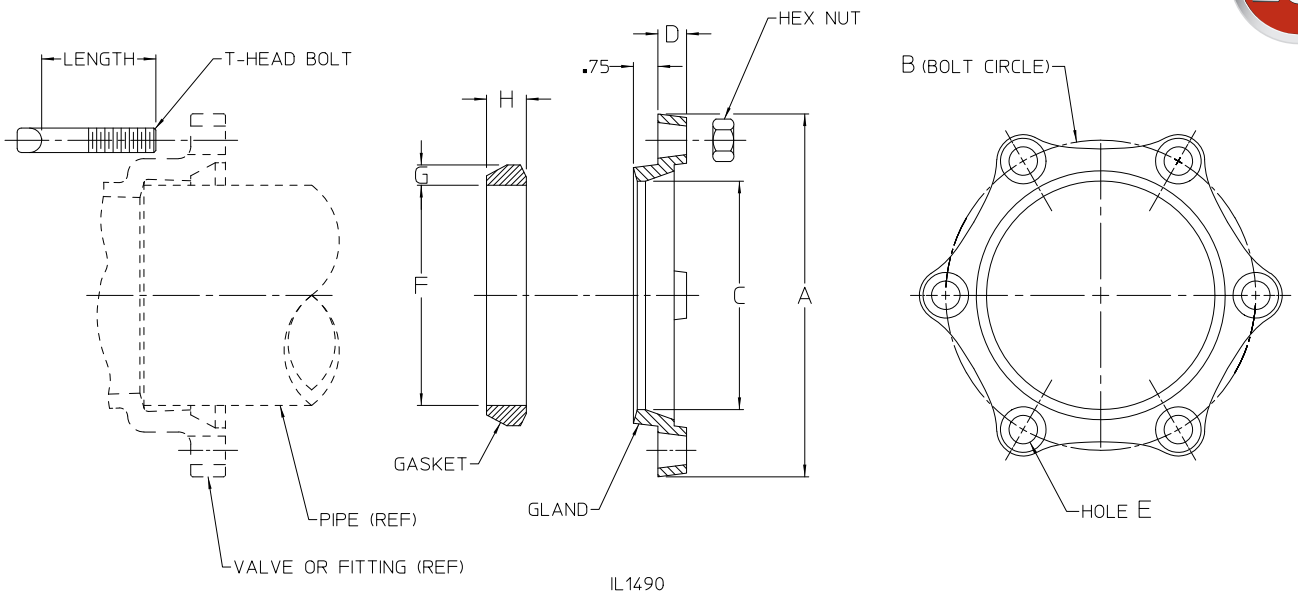

Model	Pipe or Valve Size	Gland							Gasket						T-Head Bolt		
		A Dia.	B Dia.	C Diameter		D	E		F Dia.		G		H		Qty.	Size	Length
				Std. Gland	Pit-Cast Gland		Qty.	Size	Standard Gasket	Transition Gasket	Standard Gasket	Transition Gasket	Standard Gasket	Transition Gasket			
Series 2500 Series 2500-1	2”	6.25	4.75	2.61	N/A	.62	2	.75	2.48	2.33	.48	.56	1.05	1.11	2	5/8-11	3”
	3”	7.69	6.19	4.06	N/A	.62	4	.75	3.86	3.45	.48	.70	1.05	1.11	4	5/8-11	3”
	4”	9.12	7.50	4.90	5.13	.75	4	.88	4.68	4.43	.62	.77	1.22	1.26	4	3/4-10	3-1/2”
	6”	11.12	9.50	7.00	7.24	.88	6	.88	6.73	6.53	.62	.76	1.22	1.25	6	3/4-10	3-1/2”
	8”	13.37	11.75	9.15	9.46	1.00	6	.88	8.85	8.50	.62	.82	1.22	1.27	6	3/4-10	4”
	10”	15.62	14.00	11.20	11.53	1.00	8	.88	10.87	10.59	.62	.79	1.22	1.26	8	3/4-10	4”
	12”	17.88	16.25	13.30	13.63	1.00	8	.88	12.95	12.56	.62	.84	1.22	1.28	8	3/4-10	4”
	14”	20.25	18.75	15.44	N/A	1.25	10	.88	14.99	N/A	.62	N/A	1.22	N/A	10	3/4-10	4-1/2”
	16”	22.50	21.00	17.54	N/A	1.31	12	.88	17.07	N/A	.62	N/A	1.22	N/A	12	3/4-10	4-1/2”
	18”	24.75	23.25	19.64	N/A	1.38	12	.88	19.13	N/A	.62	N/A	1.22	N/A	12	3/4-10	4-1/2”
	20”	27.00	25.50	21.74	N/A	1.44	14	.88	21.20	N/A	.62	N/A	1.22	N/A	14	3/4-10	4-1/2”
	24”	31.50	30.00	25.94	N/A	1.56	16	.88	25.34	N/A	.62	N/A	1.22	N/A	16	3/4-10	5”
	30”	39.12	36.88	32.17	N/A	2.00	20	1.12	31.47	N/A	.73	N/A	1.54	N/A	20	1”-8	6”
	36”	46.00	43.75	38.47	N/A	2.00	24	1.12	37.67	N/A	.73	N/A	1.54	N/A	24	1”-8	6”
	42”	53.12	50.62	44.67	N/A	2.00	28	1.38	43.78	N/A	.73	N/A	1.54	N/A	28	1-1/4-7	6-1/2”
	48”	60.00	57.50	50.97	N/A	2.00	32	1.38	49.98	N/A	.73	N/A	1.54	N/A	32	1-1/4-7	6-1/2”

NOTES:

1. Dimensions shown for standard glands and gaskets in 2 in. - 48 in. sizes are in accordance with ANSI/AWWA C111/A21.11 and ANSI/AWWA C153/A21.53.
2. Dimensions shown are nominal.
3. T-head bolts and nuts are high-strength, low-alloy steel.
4. Glands are ductile iron.

SERIES 2500 - STANDARD NRS PARTS LIST, 2” SIZE

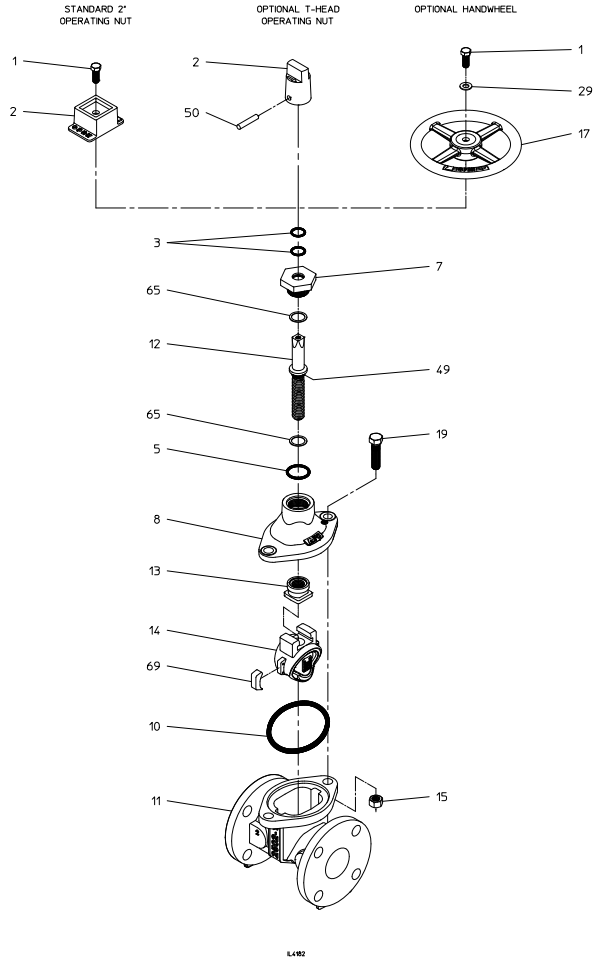

Ref No.	Description	Material	Qty. Series 2500-1
1	Hex Head Bolt, 3/8-16 x 1”	304 Stainless Steel	1
2	Operating Nut, 2” Square	Ductile Iron	1
3	O-ring	Rubber	2
5	Stuffing Box Gasket	Rubber O-ring	1
7	Stuffing Box	Brass	1
8	Bonnet	Ductile Iron	1
10	Bonnet Gasket	Rubber	1
11	Body	Ductile Iron	1
12	Stem	304 Stainless Steel	1
13	Wedge Nut	Bronze	1
14	Resilient Wedge	EPDM Rubber Encapsulated Ductile Iron	1
15	Hex Nut, 1/2-13	304 Stainless Steel	2
17	Handwheel	Ductile Iron	1
19	Hex Head Bolt, 1/2-13 x 2”	304 Stainless Steel	2
29	Flat Washer, 3/8	304 Stainless Steel	1
49	O-ring	Rubber	1
50	Spirol Pin, 5/16 x 1-1/2”	302 Stainless Steel	1
65	Thrust Washer	304 Stainless Steel	2
69	Wedge Cover	Polymer	2

SERIES 2500 - STANDARD NRS PARTS LIST, 2-1/2” & 3” SIZES

Ref No.	Description	Material	Qty. Series 2500 2-1/2”	Qty. Series 2500 3”
1	Hex Head Bolt, 5/8-11 x 1”	Stainless Steel	1	1
2	Operating Nut, 2” Square	Ductile Iron	1	1
	Operating Nut, T-Head (Optional)		1	-
3	O-ring	Rubber	2	2
4	Lower Thrust Washer	Nylon	1	1
5	Stuffing Box Gasket	Rubber O-ring	1	1
6	Hex Head Bolt, 5/8-11 x 1-3/4”	Stainless Steel	2	2
7	Stuffing Box	Ductile Iron	1	1
8	Bonnet	Ductile Iron	1	1
10	Bonnet Gasket	Rubber	1	1
11	Body	Ductile Iron	1	1
12	Stem	Bronze	1	1
		Stainless Steel (Optional)		
14	Resilient Wedge	Bronze, Coated With EPDM Rubber	1	1
15	Hex Nut, 5/8-11	Stainless Steel	4	4
17	Handwheel	Ductile Iron	1	1
19	Hex Head Bolt, 5/8-11 x 2-1/4”	Stainless Steel	2	2
29	Flat Washer, 5/8	Stainless Steel	1	1
40	UL/FM Label	Film	1	1
49	O-ring	Rubber	1	1
50	Spirol Pin, 5/16 x 1-1/2”	Stainless Steel	1	1
65	Upper Thrust Washer	Stainless Steel	1	1

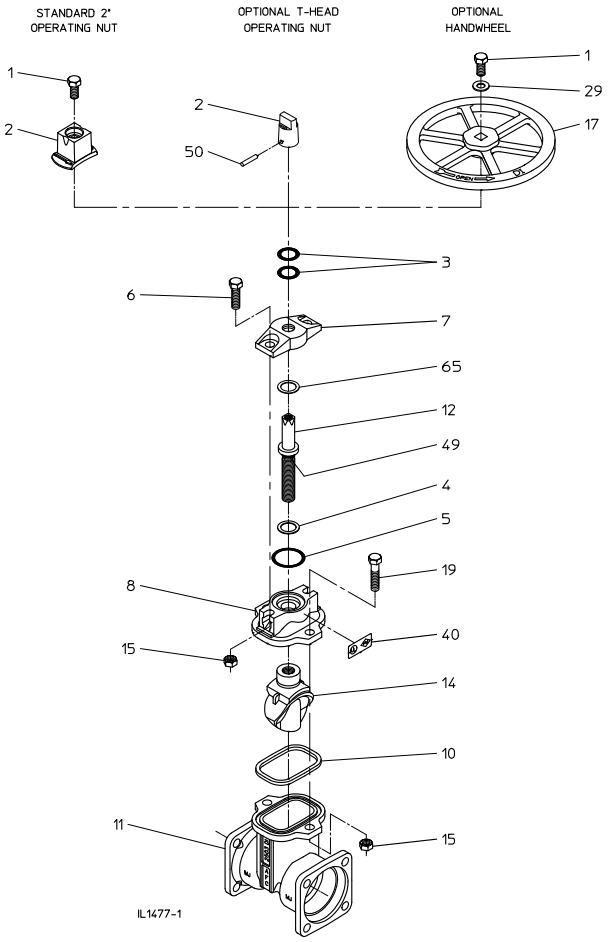

SERIES 2500 - STANDARD NRS PARTS LIST, 4”–8” SIZES

Ref No	Description	Material	Qty. Series 2500-1 4”	6”	8”
1	Hex Head Bolt, 5/8-11 x 1”	Stainless Steel	1	1	1
2	Operating Nut, 2” Square	Ductile Iron	1	1	1
3	O-ring	Rubber	2	2	2
5	Stuffing Box Gasket	Rubber O-ring	1	1	1
6	Hex Head Bolt, 5/8-11 x 1-3/4”	Stainless Steel	2	2	2
7	Stuffing Box	Ductile Iron	1	1	1
8	Bonnet	Ductile Iron	1	1	1
9	Hex Head Bolt, 5/8-11 x 2”	Stainless Steel	4	-	-
10	Bonnet Gasket	Rubber	1	1	1
11	Body	Ductile Iron	1	1	1
12	Stem	Bronze / Stainless Steel (Optional)	1	1	1
13	Wedge Nut	Bronze	1	1	1
14	Resilient Wedge	Ductile Iron, Encapsulated With EPDM Rubber	1	1	1
15	Hex Nut, 5/8-11	Stainless Steel	6	8	10
17	Handwheel	Ductile Iron	1	1	1
19	Hex Head Bolt, 5/8-11 x 2-1/4”	Stainless Steel	-	6	-
21	Hex Head Bolt, 5/8-11 x 2-1/2”	Stainless Steel	-	-	8
29	Flat Washer, 5/8	Stainless Steel	1	1	1
40	UL/FM Label	Film	1	1	1
49	O-ring	Rubber	1	1	1
65	Thrust Washer	Stainless Steel	2	2	2
69	Wedge Cover	Polymer	2	2	2

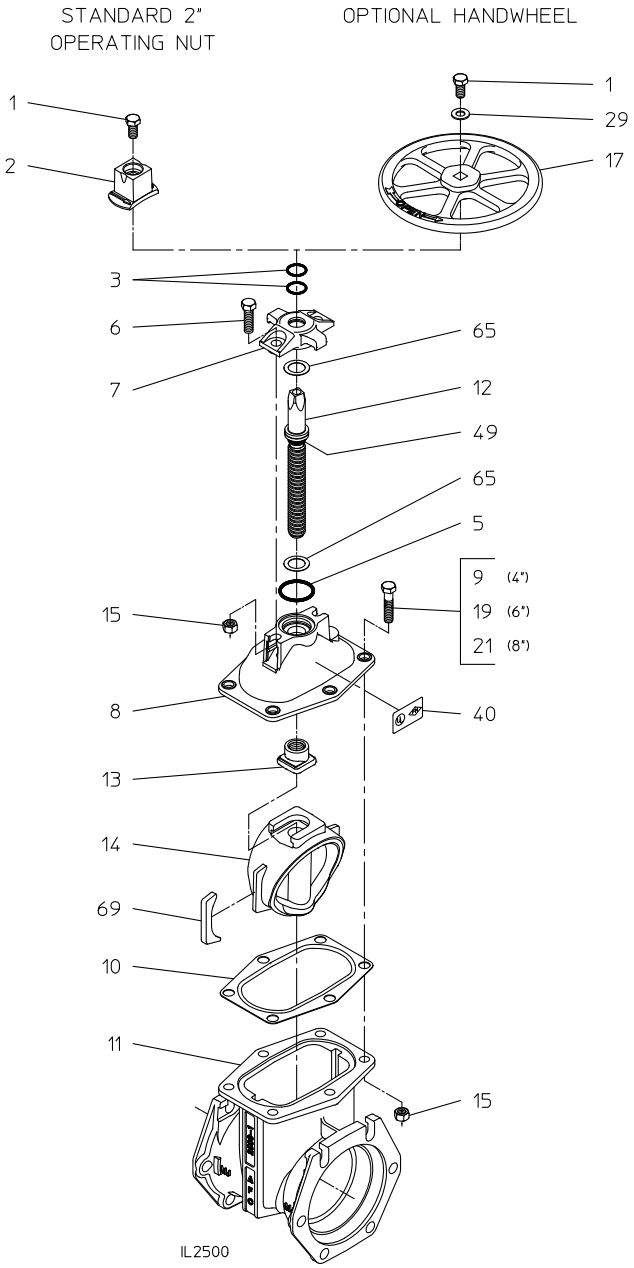

SERIES 2500 - STANDARD NRS PARTS LIST, 10” & 12” SIZES

Ref No.	Description	Material	Qty. Series 2500-1 10”	Qty. Series 2500-1 12”
1	Hex Head Bolt, 5/8-11 x 1”	Stainless Steel	1	1
2	Operating Nut, 2” Square	Ductile Iron	1	1
3	O-ring	Rubber	2	2
5	Stuffing Box Gasket	Rubber O-ring	1	1
7	Stuffing Box	Ductile Iron	1	1
8	Bonnet	Ductile Iron	1	1
9	Hex Head Bolt, 5/8-11 x 2”	Stainless Steel	4	4
10	Bonnet Gasket	Rubber	1	1
11	Body	Ductile Iron	1	1
12	Stem	Bronze	1	1
		Stainless Steel (Optional)		
13	Wedge Nut	Bronze	1	1
14	Resilient Wedge	Ductile Iron, Encapuslated With EPDM Rubber	1	1
15	Hex Nut, 5/8-11	Stainless Steel	14	4
17	Handwheel	Ductlle Iron	1	1
22	Hex Head Bolt, 5/8-11 x 2-3/4”	Stainless Steel	10	-
29	Flat Washer, 5/8	Stainless Steel	1	1
40	UL/FM Label	Film	1	1
41	Hex Head Bolt, 5/8”-11 x 1 1/2”	Stainless Steel	1	1
48	Hex Nut, 3/4-10	Stainless Steel	-	10
49	O-ring	Rubber	1	1
65	Thrust Washer	Stainless Steel	2	2
67	Hex Head Bolt, 3/4-10 x 3”	Stainless Steel	-	10
69	Wedge Cover	Polymer	2	2

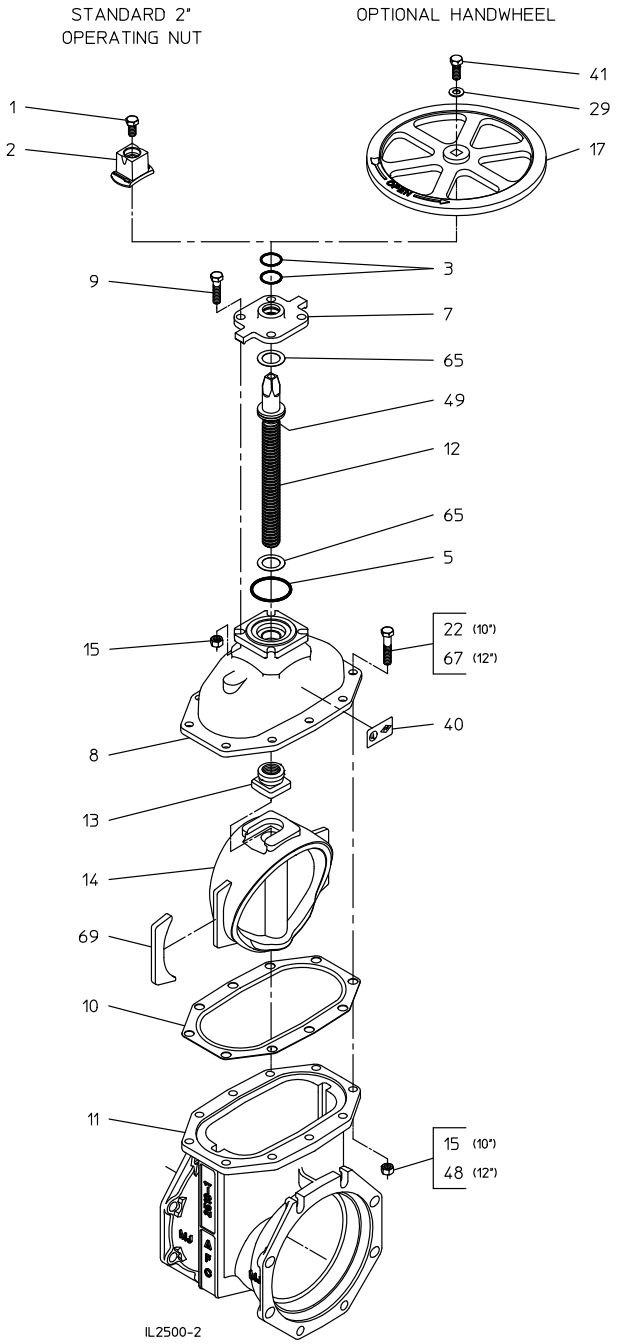

SERIES 2500 - NRS PARTS LIST, ALPHA™ & ALPHA™ XL RESTRAINED JOINT 4” - 8” SIZES

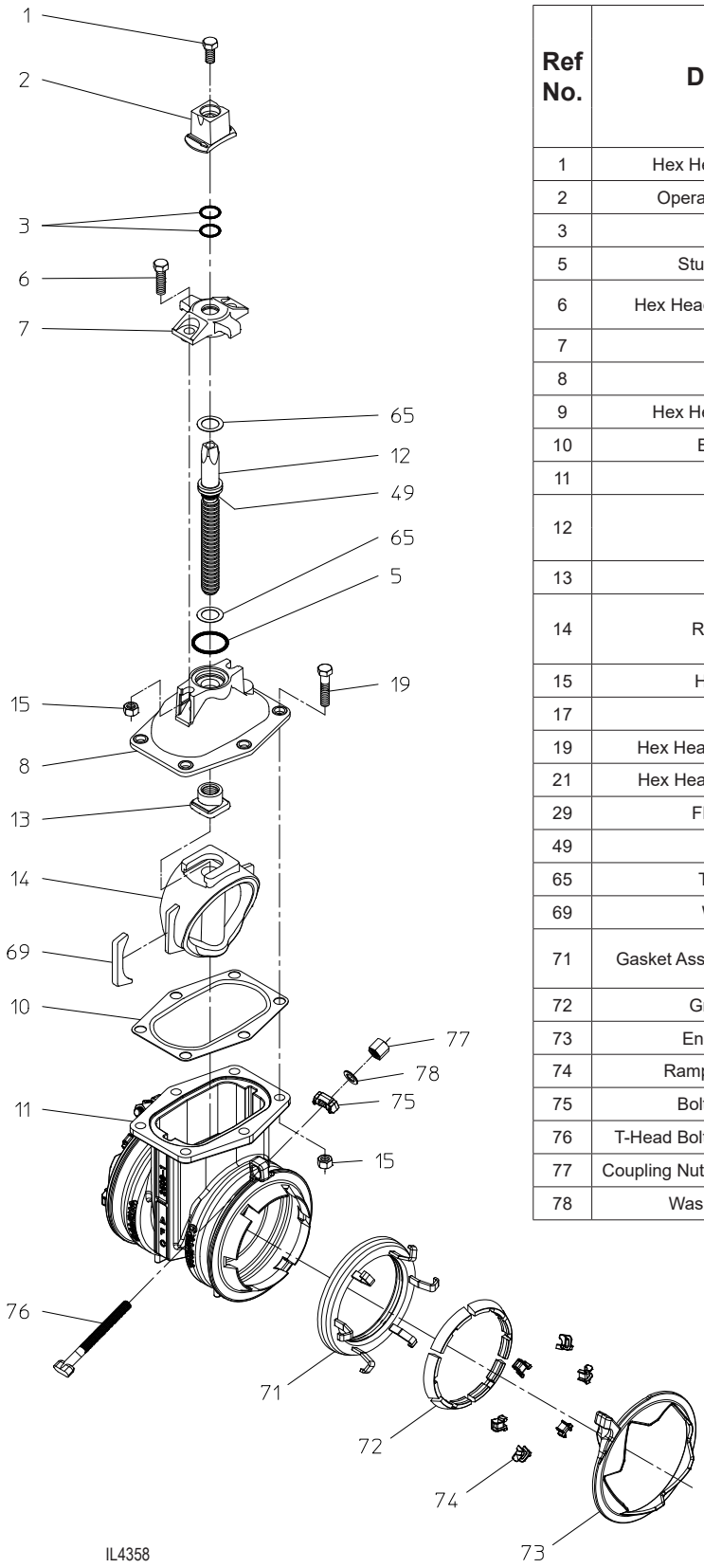

Ref No.	Description	Material	Qty. Series 2500-1		
			4”	6”	8”
1	Hex Head Bolt, 5/8-11 x 1”	Stainless Steel	1	1	1
2	Operating Nut, 2” Square	Ductile Iron	1	1	1
3	O-ring	Rubber	2	2	2
5	Stuffing Box Gasket	Rubber O-ring	1	1	1
6	Hex Head Bolt, 5/8”-11 x 1-3/4”	Stainless Steel	2	2	2
7	Stuffing Box	Ductile Iron	1	1	1
8	Bonnet	Ductile Iron	1	1	1
9	Hex Head Bolt, 5/8-11 x 2”	Stainless Steel	4	-	-
10	Bonnet Gasket	Rubber	1	1	1
11	Body	Ductile Iron	1	1	1
12	Stem	Bronze	1	1	1
		Stainless Steel (Optional)			
13	Wedge Nut	Bronze	1	1	1
14	Resilient Wedge	Ductile Iron, Encapuslated With EPDM Rubber	1	1	1
15	Hex Nut, 5/8-11	Stainless Steel	6	8	10
17	Handwheel	Ductlle Iron	1	1	1
19	Hex Head Bolt, 5/8-11 x 2-1/4”	Stainless Steel	-	6	-
21	Hex Head Bolt, 5/8-11 x 2 1/2”	Stainless Steel	-	-	8
29	Flat Washer, 5/8	Stainless Steel	1	1	1
49	O-ring	Rubber	1	1	1
65	Thrust Washer	Stainless Steel	2	2	2
69	Wedge Cover	Polymer	2	2	2
71	Gasket Assy (ALPHA or ALPHA XL)	NBR or SBR Rubber, ASTM D2000 304 Stainless Steel	2	2	2
72	Gripper (ALPHA)	Ductile Iron, ASTM A536	12	12	12
73	End Ring (ALPHA)	Ductile Iron, ASTM A536	2	2	2
74	Ramp Runner (ALPHA)	Nylon	12	12	12
75	Bolt Guide (ALPHA)	Ductile Iron, ASTM A536	2	2	2
76	T-Head Bolt, 5/8-11 x 7.25” (ALPHA)	Stainless Steel	2	2	2
77	Coupling Nut, 5/8-11 x 1-1/16” (ALPHA)	Stainless Steel	2	2	2
78	Washer, 5/8” (ALPHA)	Stainless Steel	2	2	2

SERIES 2500 - NRS PARTS LIST, ALPHA™ & ALPHA™ XL RESTRAINED JOINT 10” - 12” SIZES

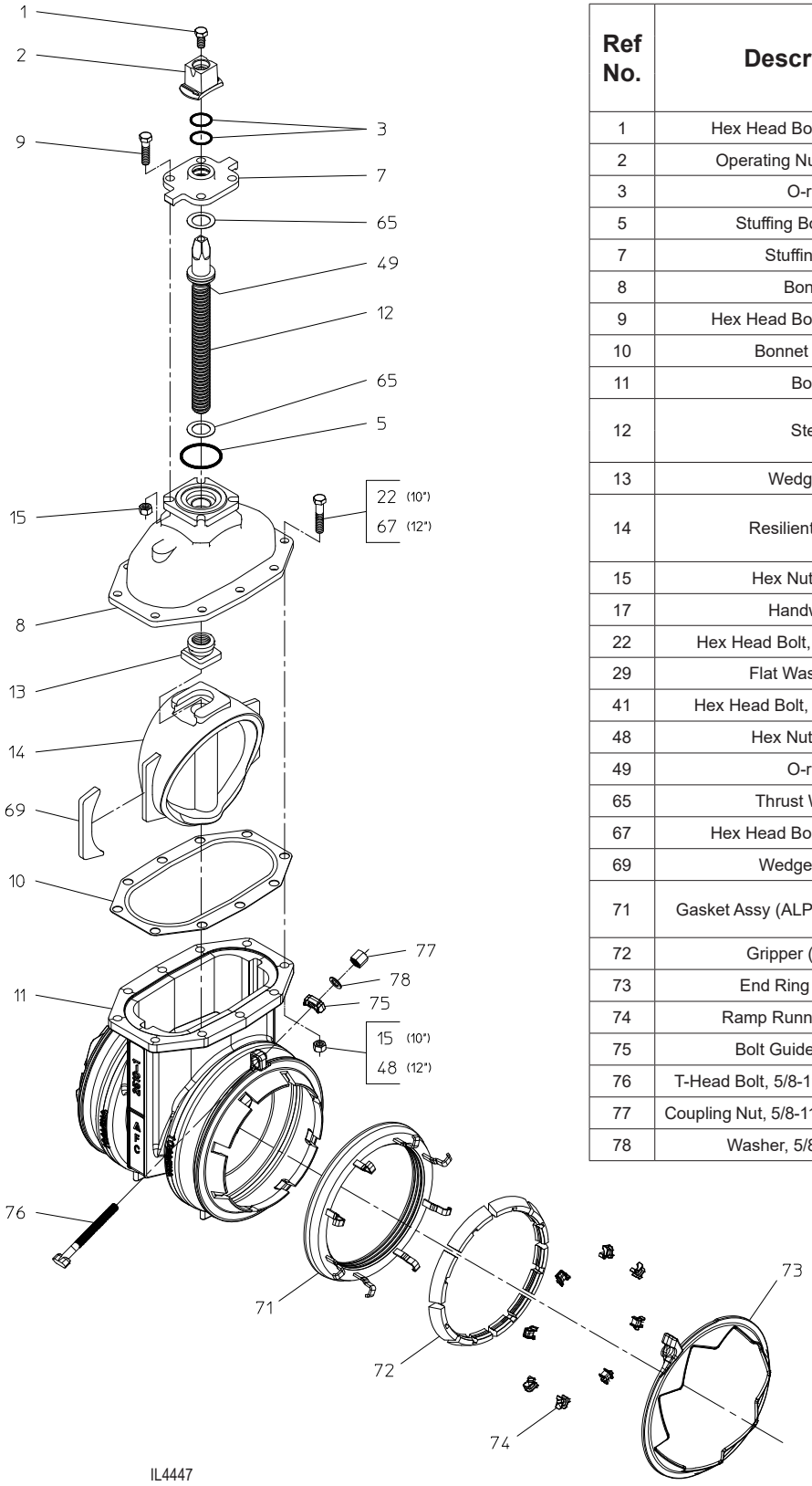

Ref No.	Description	Material	Qty. Series 2500-1 10”	Qty. Series 2500-1 12”
1	Hex Head Bolt, 5/8-11 x 1”	Stainless Steel	1	1
2	Operating Nut, 2” Square	Ductile Iron	1	1
3	O-ring	Rubber	2	2
5	Stuffing Box Gasket	Rubber O-ring	1	1
7	Stuffing Box	Ductile Iron	1	1
8	Bonnet	Ductile Iron	1	1
9	Hex Head Bolt, 5/8-11 x 2”	Stainless Steel	4	4
10	Bonnet Gasket	Rubber	1	1
11	Body	Ductile Iron	1	1
12	Stem	Bronze Stainless Steel (Optional)	1	1
13	Wedge Nut	Bronze	1	1
14	Resilient Wedge	Ductile Iron, Encapuslated With EPDM Rubber	1	1
15	Hex Nut, 5/8-11	Stainless Steel	14	4
17	Handwheel	Ductlle Iron	1	1
22	Hex Head Bolt, 5/8-11 x 2-3/4”	Stainless Steel	10	-
29	Flat Washer, 5/8	Stainless Steel	1	1
41	Hex Head Bolt, 5/8”-11 x 1 1/2”	Stainless Steel	1	1
48	Hex Nut, 3/4-10	Stainless Steel	-	10
49	O-ring	Rubber	1	1
65	Thrust Washer	Stainless Steel	2	2
67	Hex Head Bolt, 3/4-10 x 3”	Stainless Steel	-	10
69	Wedge Cover	Polymer	2	2
71	Gasket Assy (ALPHA or ALPHA XL)	NBR or SBR Rubber, ASTM D2000 304 Stainless Steel	2	2
72	Gripper (ALPHA)	Ductile Iron, ASTM A536	16	16
73	End Ring (ALPHA)	Ductile Iron, ASTM A536	2	2
74	Ramp Runner (ALPHA)	Nylon	16	16
75	Bolt Guide (ALPHA)	Ductile Iron, ASTM A536	2	2
76	T-Head Bolt, 5/8-11 x 7.25” (ALPHA)	Stainless Steel	2	2
77	Coupling Nut, 5/8-11 x 1-1/16” (ALPHA)	Stainless Steel	2	2
78	Washer, 5/8” (ALPHA)	Stainless Steel	2	2

SERIES 2500 - STANDARD NRS PARTS LIST, 14”–24” SIZES

Ref No.	Description	Material	Qty. Series 2500 14”	16”	18”	20”	24”
1	Hex Head Bolt, 5/8-11 x 1-3/4”	Stainless Steel	1	1	1	1	1
2	Operating Nut, 2” Square	Ductile Iron	1	1	1	1	1
3	O-ring	Rubber	2	2	2	2	2
4	Upper Thrust Washer	Delrin	1	1	1	1	1
5	Stuffing Box Gasket	Rubber O-ring	1	1	1	1	1
6	O-ring	Rubber	1	1	1	1	1
7	Stuffing Box	Ductile Iron	1	1	1	1	1
8	Bonnet	Ductile Iron	1	1	1	1	1
9	Hex Head Bolt, 7/8-9 x 3”	Stainless Steel	4	4	4	-	-
9	Hex Head Bolt, 7/8-9 x 4”	Stainless Steel	-	-	-	4	4
10	Bonnet Gasket	Rubber	1	1	1	1	1
11	Body	Ductile Iron	1	1	1	1	1
12	Stem	Bronze / Stainless Steel (Optional)	1	1	1	1	1
13	Wedge Nut	Bronze	1	1	1	1	1
14	Resilient Wedge	Ductile Iron, Coated With EPDM Rubber	1	1	1	1	1
15	Wedge Cover	Polymer	2	2	2	2	2
16	Wedge Cover Pin	Polymer	2	4	4	2	2
17	Hex Head Bolt, 3/4-10 x 3-1/2”	Stainless Steel	14	16	-	-	-
17	Hex Head Bolt, 7/8-9 x 4”	Stainless Steel	-	-	16	-	-
17	Hex Head Bolt, 7/8-9 x 4-1/2”	Stainless Steel	-	-	-	18	-
17	Hex Head Bolt, 7/8-9 x 5”	Stainless Steel	-	-	-	-	20
18	Hex Nut, 3/4-10	Stainless Steel	14	16	-	-	-
18	Hex Nut, 7/8-9	Stainless Steel	-	-	16	18	20
19	Hex Nut, 7/8-9	Stainless Steel	4	4	4	4	4
20	Pipe Plug, 3/8 NPT	Stainless Steel	1	1	1	1	1
21	Lower Thrust Washer	Delrin	1	1	1	1	1

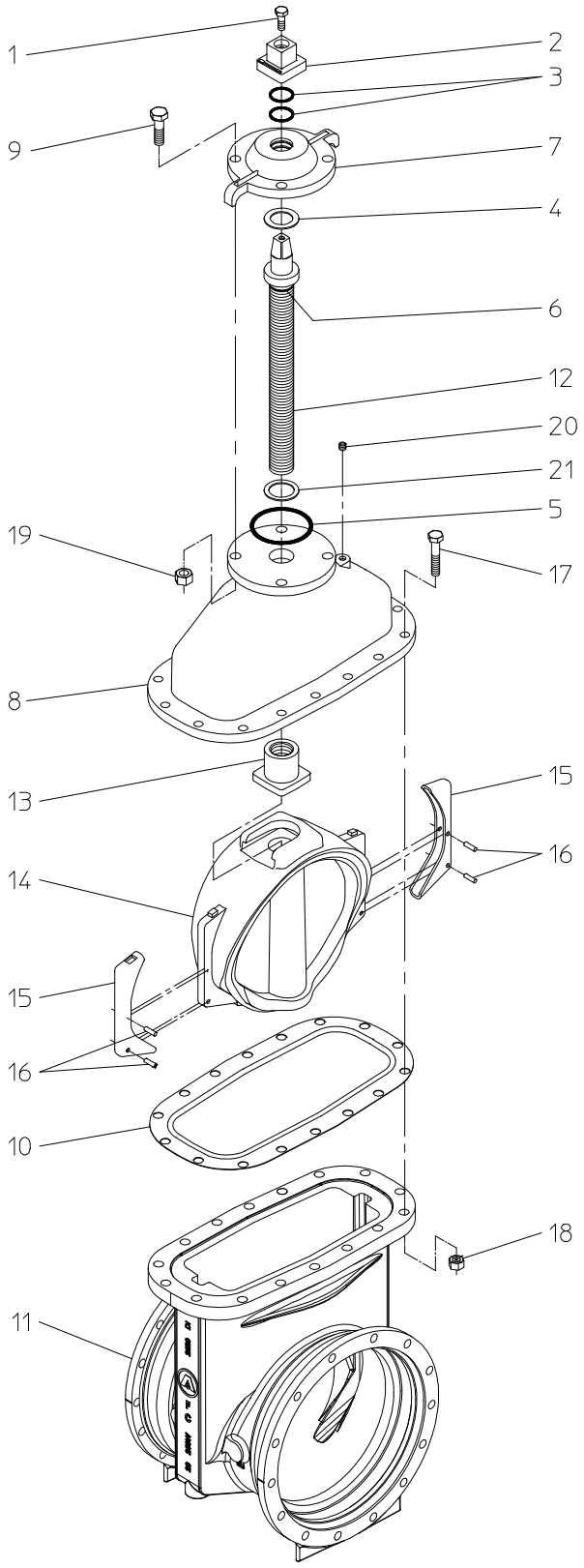

SERIES 2500 - NRS WITH ENCLOSED MITER GEARING PARTS LIST
3”–12” SIZES

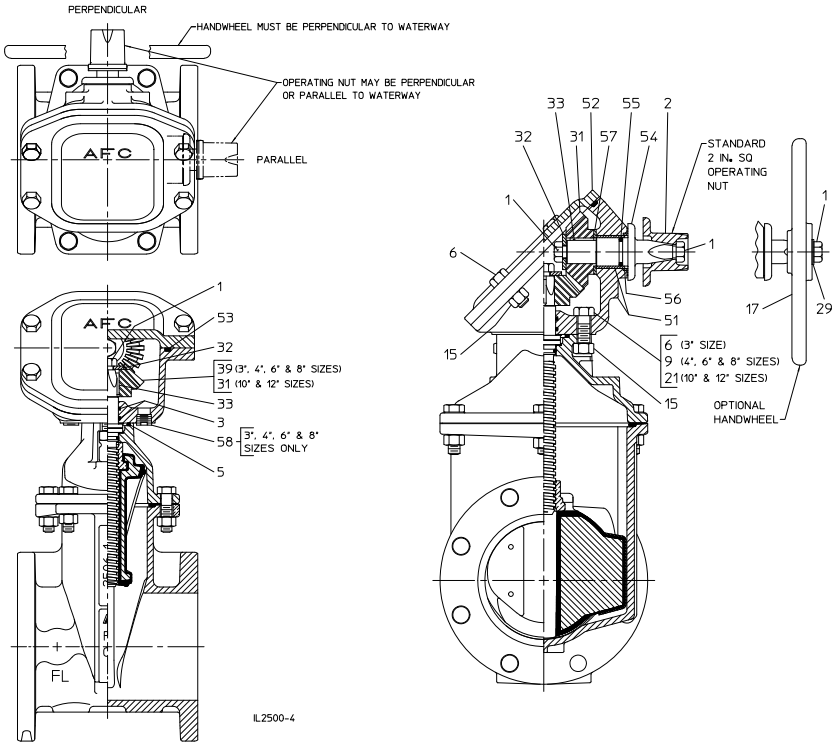

Ref. No.	Description	Material	Qty.					
			Series 2500	Series 2500-1				
			3”	4”	6”	8”	10”	12”
1	Hex Head Bolt, 5/8-11 x 1”	Stainless Steel	3	3	3	3	3	3
2	Operating nut, 2” Square	Ductile Iron	1	1	1	1	1	1
3	O-ring	Rubber	2	2	2	2	2	2
5	Stuffing Box Gasket	Rubber	1	1	1	1	1	1
6	Hex Head Bolt, 5/8-11 x 1-3/4”	Stainless Steel	6	4	4	4	4	4
9	Hex Head Bolt, 5/8-11 x 2”	Stainless Steel	-	2	2	2	-	-
15	Hex Nut, 5/8-11	Stainless Steel	6	6	6	6	8	8
17	Handwheel (Optional)	Ductile Iron	1	1	1	1	1	1
21	Hex Head Bolt, 5/8-11 x 2-1/2”	Stainless Steel	-	-	-	-	4	4
29	Flat Washer, 5/8	Stainless Steel	1	1	1	1	1	1
31	Miter Gear	Steel	1	1	1	1	2	2
32	Flat Washer	Aluminum	2	2	2	2	2	2
33	Square Key, 1/4”	Stainless Steel	2	2	2	2	2	2
39	Miter Gaers	Steel	1	1	1	1	-	-
51	Gear Housing Assembly	Ductile Iron with Sintered Bronze Bushing	1	1	1	1	1	1
52	Gear Housing Cover	Ductile Iron	1	1	1	1	1	1
53	Housing Gasket	Rubber	1	1	1	1	1	1
54	Gear Shaft	Ductile Iron	1	1	1	1	1	1
55	O-ring	Rubber	1	1	1	1	1	1
56	Thrust Bearing	Bronze	1	1	1	1	1	1
57	Thrust Washer	Bronze	1	1	1	1	1	1
58	Headless Pipe Plug, 1/2 NPT	Brass	2	2	2	2	-	-

NOTE: See standard NRS dimension drawing and parts list drawing for dimensions and material descriptions not shown.

SERIES 2500 - NRS WITH BEVEL GEARING PARTS LIST, 14”–18” SIZES

Ref No.	Description	Material	Qty. Series 2500		
			14”	16”	18”
1-K	Key 8 mm x 7 mm x 40 mm	Steel	1	1	1
2-K	Operating Nut, 2” Square	Ductile Iron	1	1	1
3	O-ring	Rubber	2	2	2
4	Upper Thrust Washer	Delrin	1	1	1
5	Stuffing Box Gasket	Rubber O-ring	1	1	1
6	O-ring	Rubber	1	1	1
7	Stuffing Box	Ductile Iron	1	1	1
8	Bonnet	Ductile Iron	1	1	1
9	Hex Head Bolt, 7/8-9 x 3”	Stainless Steel	4	4	4
10	Bonnet Gasket	Rubber	1	1	1
11	Body	Ductile Iron	1	1	1
12	Stem	Bronze	1	1	1
		Stainless Steel (Optional)			
13	Wedge Nut	Bronze	1	1	1
14	Resilient Wedge	Ductile Iron, Coated With EPDM Rubber	1	1	1
15	Wedge Cover	Polymer	2	2	2
16	Wedge Cover Pin	Polymer	2	4	4
17	Hex Head Bolt, 3/4-10 x 3-1/2”	Stainless Steel	14	16	-
17	Hex Head Bolt, 7/8-9 x 4”	Stainless Steel	-	-	16
18	Hex Nut, 3/4-10	Stainless Steel	14	16	-
18	Hex Nut, 7/8-9	Stainless Steel	-	-	16
19	Hex Nut, 7/8-9	Stainless Steel	4	4	4
20	Pipe Plug, 3/8 NPT	Stainless Steel	1	1	1
21	Lower Thrust Washer	Delrin	1	1	1
22	Stud, 5/8-11 x 2-3/4”	Stainless Steel	4	4	4
23	Hex Nut, 5/8-11	Stainless Steel	4	4	4
25	Square Key, 5/16 x 2-1/2	Hardened Steel	1	1	1
27	Bevel Gear Operator 2:1	Rotork IB5	1	1	1
29	Actuator Gasket	Rubber O-ring	1	1	1
30	Hex Head Bolt, 3/8-16 x 3/4”	Zinc Plated Steel	1	1	1
31	Washer	Steel	1	1	1
60-K	Spring Pin, 1/4 x 3/4”	Stainless Steel	1	1	1

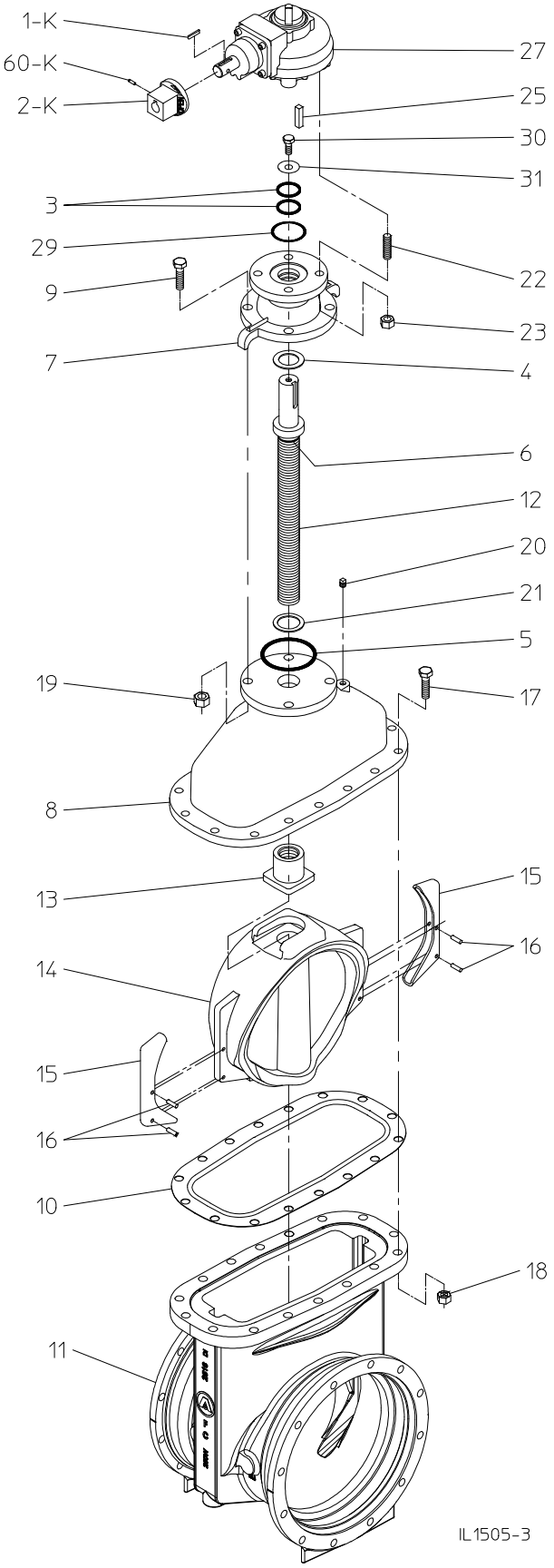

SERIES 2500 - NRS WITH BEVEL GEARING PARTS LIST, 20” & 24” SIZES

Ref No.	Description	Material	Qty. Series 2500 20”	Qty. Series 2500 24”
1-K	Key 8 mm x 7 mm x 40 mm	Steel	1	1
2-K	Operating Nut, 2” Square	Ductile Iron	1	1
3	O-ring	Rubber	2	2
4	Upper Thrust Washer	Delrin	1	1
5	Stuffing Box Gasket	Rubber O-ring	1	1
6	O-ring	Rubber	1	1
7	Stuffing Box	Ductile Iron	1	1
8	Bonnet	Ductile Iron	1	1
10	Bonnet Gasket	Rubber	1	1
11	Body	Ductile Iron	1	1
12	Stem	Bronze	1	1
		Stainless Steel (Optional)		
13	Wedge Nut	Bronze	1	1
14	Resilient Wedge	Ductile Iron, Coated With EPDM Rubber	1	1
15	Wedge Cover	Polymer	2	2
16	Wedge Cover Pin	Polymer	2	2
17	Hex Head Bolt, 7/8-9 x 4-1/2”	Stainless Steel	18	-
17	Hex Head Bolt, 7/8-9 x 5”	Stainless Steel	-	20
18	Hex Nut, 7/8-9	Stainless Steel	18	20
20	Pipe Plug, 3/8 NPT	Stainless Steel	1	1
21	Lower Thrust Washer	Delrin	1	1
22	Stud, 7/8-9 x 3-1/2”	Stainless Steel	4	4
23	Hex Nut, 7/8-9	Stainless Steel	4	4
25	Square Key, 1/2 x 2-3/4	Hardened Steel	1	1
27	Bevel Gear Operator 3:1	Rotork IB7	1	1
28	Socket Head Cap Screw 3/4-10 x 2”	Stainless Steel	4	4
29	Actuator Gasket	Rubber O-ring	1	1
30	Hex Head Bolt, 1/2-13 x 1”	Zinc Plated Steel	1	1
31	Washer	Steel	1	1
60-K	Spring Pin, 1/4 x 3/4”	Stainless Steel	1	1

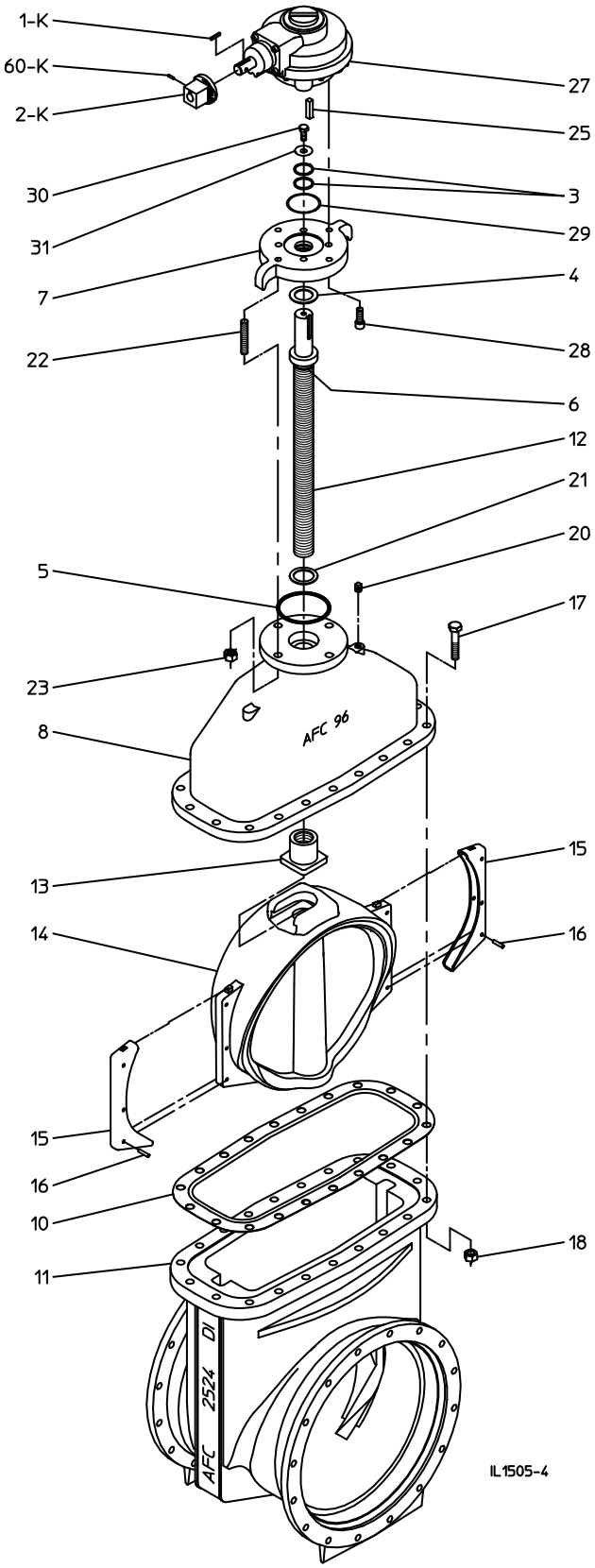

SERIES 2500 - NRS WITH BEVEL GEARING PARTS LIST, 30” & 36” SIZES

Ref No.	Description	Material	Qty. Series 2500 30”	Qty. Series 2500 36”
1-K	Key 8 mm x 7 mm x 40 mm	Steel	1	1
2-K	Operating Nut, 2” Square	Ductile Iron	1	1
3	O-ring	Rubber	2	2
4	Upper Thrust Washer	Delrin	1	1
5	Stuffing Box Gasket	Rubber O-ring	1	1
6	O-ring	Rubber	1	1
7	Stuffing Box	Ductile Iron	1	1
8	Bonnet	Ductile Iron	1	1
10	Bonnet Gasket	Rubber	1	-
10	Bonnet Gasket	EPDM Rubber	-	1
11	Body	Ductile Iron	1	1
12	Stem	Bronze	1	1
		Stainless Steel (Optional)		
13	Wedge Nut	Bronze	1	1
14	Resilient Wedge	Ductile Iron, Coated With EPDM Rubber	1	1
15	Wedge Cover	Polymer	2	2
16	Wedge Cover Pin	Polymer	2	2
17	Hex Head Bolt, 1-8 x 6”	Stainless Steel	24	-
17	Hex Head Bolt, 1-1/4-7 x 7”	Stainless Steel	-	28
18	Hex Nut, 1”-8	Stainless Steel	24	-
18	Hex Nut, 1-1/4-7	Stainless Steel	-	28
20	Pipe Plug, 3/8 NPT	Stainless Steel	4	4
21	Lower Thrust Washer	Delrin	1	1
22	Stud, 1”-8 x 6”	Stainless Steel	6	-
22	Stud, 1”-8 x 6-1/2”	Stainless Steel	-	8
23	Hex Nut, 1”-8	Stainless Steel	12	16
25	Square Key, 1/2 x 3-1/2	Hardened Steel	1	-
25	Square Key, 5/8 x 4”	Hardened Steel	-	1
27	Bevel Gear Operator 4:1	Rotork IB8	1	-
27	Bevel Gear Operator 4:1	Rotork IB10	-	1
28	Socket Head Cap Screw 3/4-10 x 2”	Stainless Steel	4	-
28	Socket Head Cap Screw 5/8-11 x 2”	Stainless Steel	-	8
29	Actuator Gasket	Rubber O-ring	1	1
30	Hex Head Bolt, 3/4-10 x 1”	Zinc Plated Steel	1	1
31	Washer	Steel	1	1
60-K	Spring Pin, 1/4 x 3/4”	Stainless Steel	1	1

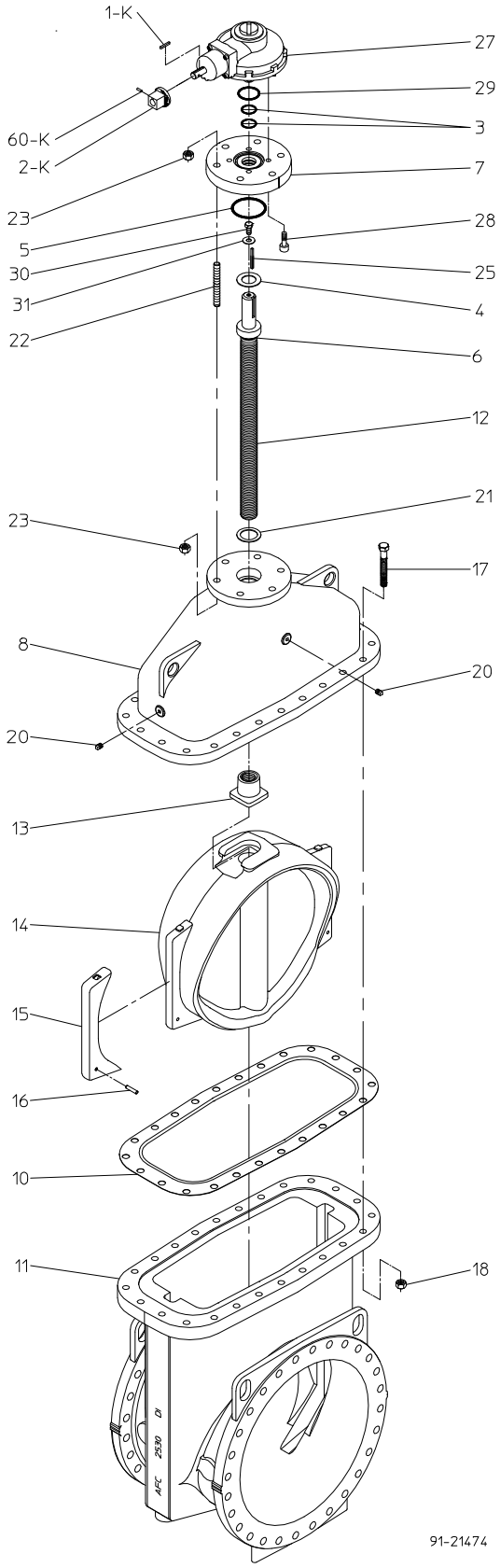

SERIES 2500 - NRS WITH BEVEL GEARING PARTS LIST, 42”–54” SIZES

Ref No.	Description	Material	Qty. Series 2500 42”	48”	54”
1-K	Key 14 mm x 9 mm x 54 mm	Steel	1	1	1
2-K	Operating Nut, 2” Square	Ductile Iron	1	1	1
3	O-ring	Rubber	2	2	2
4	Upper Thrust Washer	Delrin	1	1	1
5	Stuffing Box Gasket	Rubber O-ring	1	1	1
6	O-ring	Rubber	1	1	1
7	Stuffing Box	Ductile Iron	1	1	1
8	Bonnet	Ductile Iron	1	1	1
10	Bonnet Gasket	EPDM Rubber	1	1	1
11	Body	Ductile Iron	1	1	1
12	Stem	Bronze / Stainless Steel (Optional)	1	1	1
13	Wedge Nut	Bronze	1	1	1
14	Resilient Wedge	Ductile Iron, Coated With EPDM Rubber	1	1	1
15	Wedge Cover	Polymer	2	2	2
16	Wedge Cover Pin	Polymer	2	2	2
17	Hex Head Bolt, 1-1/4-7 x 7-1/2”	Stainless Steel	32	-	-
17	Hex Head Bolt, 1-3/8-6 x 8-1/2”	Stainless Steel	-	36	36
18	Hex Nut, 1-1/4-7	Stainless Steel	32	-	-
18	Hex Nut, 1-3/8-6	Stainless Steel	-	36	36
20	Pipe Plug, 1/2 NPT	Stainless Steel	4	4	4
21	Lower Thrust Washer	Delrin	1	1	1
22	Stud, 1-1/4-7 x 7-1/2”	Stainless Steel	8	-	-
22	Stud, 1-1/4-7 x 7-3/4”	Stainless Steel	-	8	8
23	Hex Nut, 1-1/4-7	Stainless Steel	16	16	16
25	Square Key, 3/4 x 4-1/2	Hardened Steel	1	1	1
27	Bevel Gear Operator 8:1	Rotork IB12	1	1	1
28	Socket Head Cap Screw 3/4-10 x 2-1/2”	Stainless Steel	8	8	8
29	Actuator Gasket	Rubber O-ring	1	1	1
30	Hex Head Bolt, 7/8-9 x 1-1/2”	Zinc Plated Steel	1	1	1
31	Washer	Steel	1	1	1
50-K	Set Screw 5/16-18 x 3/4”	Stainless Steel	1	1	1

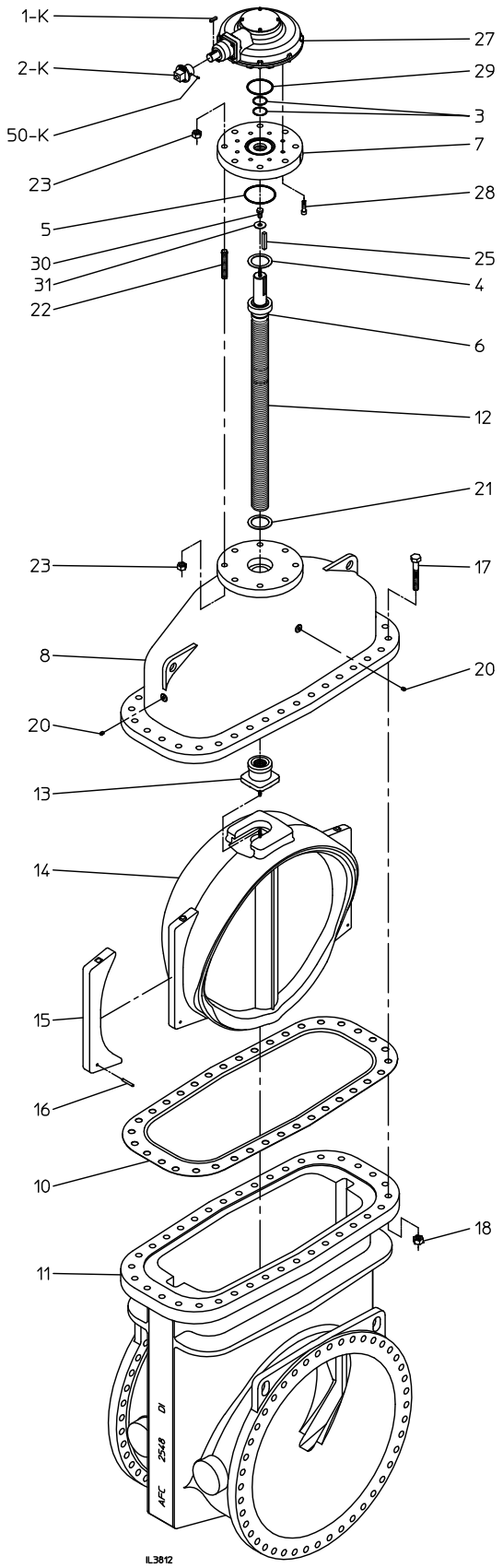

SERIES 2500 - NRS WITH BEVEL GEARING PARTS LIST, 60” & 66” SIZES

Ref No.	Description	Material	Qty. Series 2500 60”	Qty. Series 2500 66”
1-K	Key 14 mm x 9 mm x 54 mm	Steel	1	1
2-K	Operating Nut, 2” Square	Ductile Iron	1	1
3	O-ring	Rubber	2	2
4	Upper Thrust Washer	Delrin	1	1
5	Stuffing Box Gasket	Rubber O-ring	1	1
6	O-ring	Rubber	1	1
7	Stuffing Box	Ductile Iron	1	1
8	Bonnet	Ductile Iron	1	1
10	Bonnet Gasket	EPDM Rubber	1	1
11	Body	Ductile Iron	1	1
12	Stem	Stainless Steel	1	1
13	Wedge Nut	Bronze	1	1
14	Resilient Wedge	Ductile Iron, Coated With EPDM Rubber	1	1
15	Wedge Cover	Polymer	4	4
16	Wedge Cover Pin	Polymer	4	4
17	Hex Head Bolt, 1-3/8-6 x 8-1/2”	Stainless Steel	32	32
18	Hex Nut, 1-3/8-6	Stainless Steel	32	32
20	Pipe Plug, 1/2 NPT	Stainless Steel	4	4
21	Lower Thrust Washer	Delrin	1	1
22	Stud, 1-1/4-7 x 7-1/2”	Stainless Steel	8	8
23	Hex Nut, 1-1/4-7	Stainless Steel	16	16
25	Square Key, 3/4 x 4-1/2	Hardened Steel	1	1
27	Bevel Gear Operator 8:1	Rotork IB12	1	1
28	Socket Head Cap Screw 3/4-10 x 2-1/2”	Stainless Steel	8	8
29	Actuator Gasket	Rubber O-ring	1	1
30	Hex Head Bolt, 7/8-9 x 1-1/2”	Plated Steel	1	1
31	Washer	Steel	1	1
50-K	Set Screw 5/16-18 x 3/4”	Stainless Steel	1	1
55	Blind Flange**	Ductile Iron	1	1
56	Stud, 5/8-11 x 3”	Stainless Sreel	8	8
57	Hex Nut, 5/8-11	Stainless Steel	8	8
83	Blind Flange Gasket	Rubber	2	2

** On horizontal configurations, the blind flange (Ref. # 55) will be located on the bottom of the valve guide track, opposite the direction in which the bevel gear input shaft is installed.

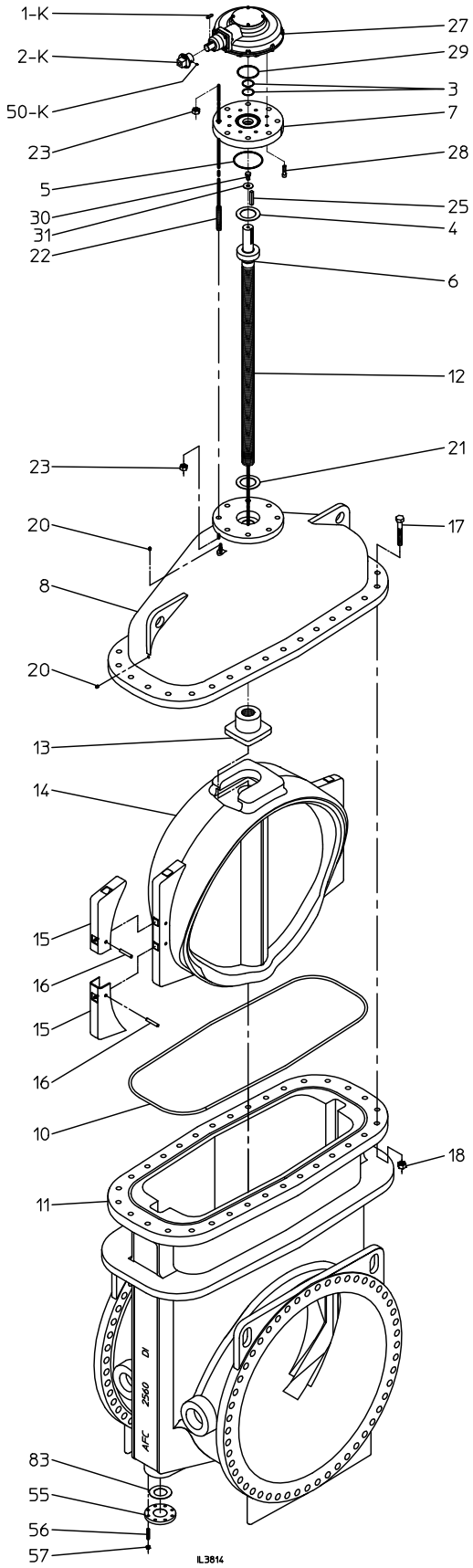

SERIES 2500 - NRS WITH SPUR GEARING PARTS LIST, 14”–18” SIZES

Ref No.	Description	Material	Qty. Series 2500 14”	16”	18”
1-K	Key 8 mm x 7 mm x 40 mm	Steel	1	1	1
2-K	Operating Nut, 2” Square	Ductile Iron	1	1	1
3	O-ring	Rubber	2	2	2
4	Upper Thrust Washer	Delrin	1	1	1
5	Stuffing Box Gasket	Rubber O-ring	1	1	1
6	O-ring	Rubber	1	1	1
7	Stuffing Box	Ductile Iron	1	1	1
8	Bonnet	Ductile Iron	1	1	1
9	Hex Head Bolt, 7/8-9 x 3”	Stainless Steel	4	4	4
10	Bonnet Gasket	Rubber	1	1	1
11	Body	Ductile Iron	1	1	1
12	Stem	Bronze	1	1	1
		Stainless Steel (Optional)			
13	Wedge Nut	Bronze	1	1	1
14	Resilient Wedge	Ductile Iron, Coated With EPDM Rubber	1	1	1
15	Wedge Cover	Polymer	2	2	2
16	Wedge Cover Pin	Polymer	2	4	4
17	Hex Head Bolt, 3/4-10 x 3-1/2”	Stainless Steel	14	16	-
17	Hex Head Bolt, 7/8-9 x 4”	Stainless Steel	-	-	16
18	Hex Nut, 3/4-10	Stainless Steel	14	16	-
18	Hex Nut, 7/8-9	Stainless Steel	-	-	16
19	Hex Nut, 7/8-9	Stainless Steel	4	4	4
20	Pipe Plug, 3/8 NPT	Stainless Steel	1	1	1
21	Lower Thrust Washer	Delrin	1	1	1
22	Stud, 5/8-11 x 2-3/4”	Stainless Steel	4	4	4
23	Hex Nut, 5/8-11	Stainless Steel	4	4	4
24	Spur Gear Operator 2:1	Rotork IS5	1	1	1
25	Square Key, 5/16 x 2-1/2	Hardened Steel	1	1	1
29	Actuator Gasket	Rubber O-ring	1	1	1
30	Hex Head Bolt, 3/8-16 x 3/4”	Zinc Plated Steel	1	1	1
31	Washer	Steel	1	1	1
60-K	Spring Pin, 1/4 x 3/4”	Stainless Steel	1	1	1

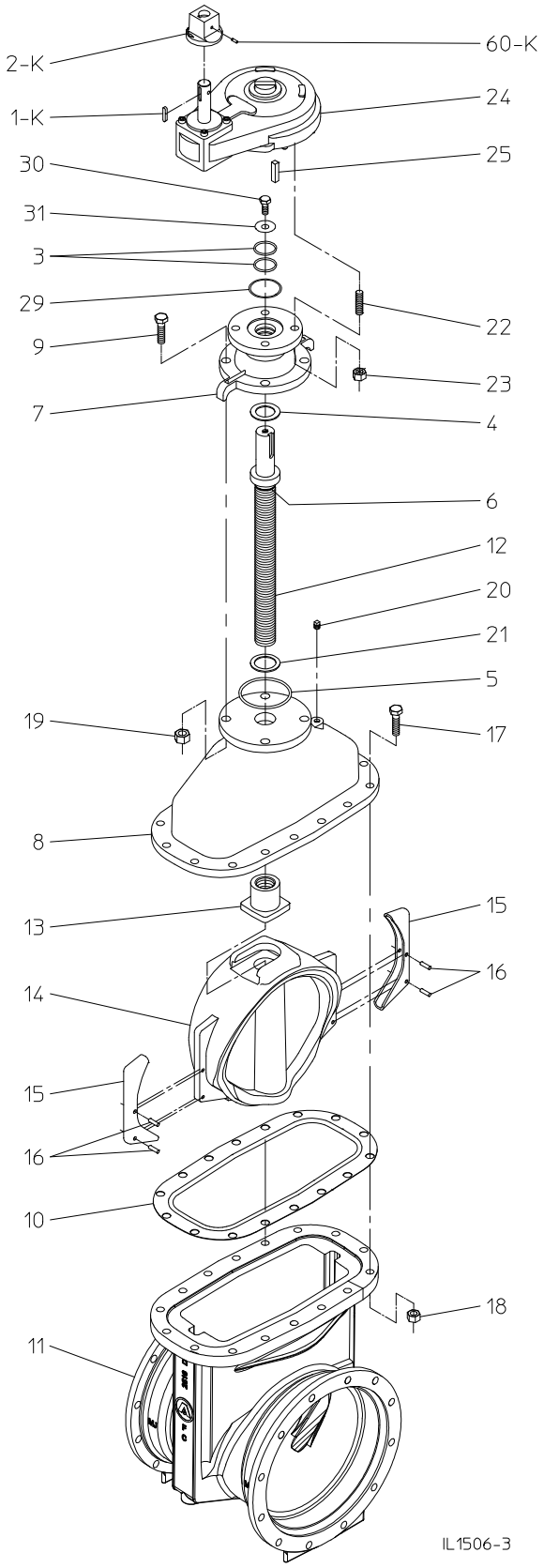

SERIES 2500 - NRS WITH SPUR GEARING PARTS LIST, 20” & 24” SIZES

Ref No.	Description	Material	Qty. Series 2500 20”	Qty. Series 2500 24”
1-K	Key 8 mm x 7 mm x 40 mm	Steel	1	1
2-K	Operating Nut, 2” Square	Ductile Iron	1	1
3	O-ring	Rubber	2	2
4	Upper Thrust Washer	Delrin	1	1
5	Stuffing Box Gasket	Rubber O-ring	1	1
6	O-ring	Rubber	1	1
7	Stuffing Box	Ductile Iron	1	1
8	Bonnet	Ductile Iron	1	1
10	Bonnet Gasket	Rubber	1	1
11	Body	Ductile Iron	1	1
12	Stem	Bronze	1	1
		Stainless Steel (Optional)		
13	Wedge Nut	Bronze	1	1
14	Resilient Wedge	Ductile Iron, Coated With EPDM Rubber	1	1
15	Wedge Cover	Polymer	2	2
16	Wedge Cover Pin	Polymer	2	2
17	Hex Head Bolt, 7/8-9 x 4-1/2”	Stainless Steel	18	-
17	Hex Head Bolt, 7/8-9 x 5”	Stainless Steel	-	20
18	Hex Nut, 7/8-9	Stainless Steel	18	20
20	Pipe Plug, 3/8 NPT	Stainless Steel	1	1
21	Lower Thrust Washer	Delrin	1	1
22	Stud, 7/8-9 x 3-1/2”	Stainless Steel	4	4
23	Hex Nut, 7/8-9	Stainless Steel	4	4
24	Spur Gear Operator 3:1	Rotork IS7	1	1
25	Square Key, 1/2 x 2-3/4	Hardened Steel	1	1
28	Socket Head Cap Screw 3/4-10 x 2”	Stainless Steel	4	4
29	Actuator Gasket	Rubber O-ring	1	1
30	Hex Head Bolt, 1/2-13 x 1”	Zinc Plated Steel	1	1
31	Washer	Steel	1	1
60-K	Spring Pin, 1/4 x 3/4”	Stainless Steel	1	1

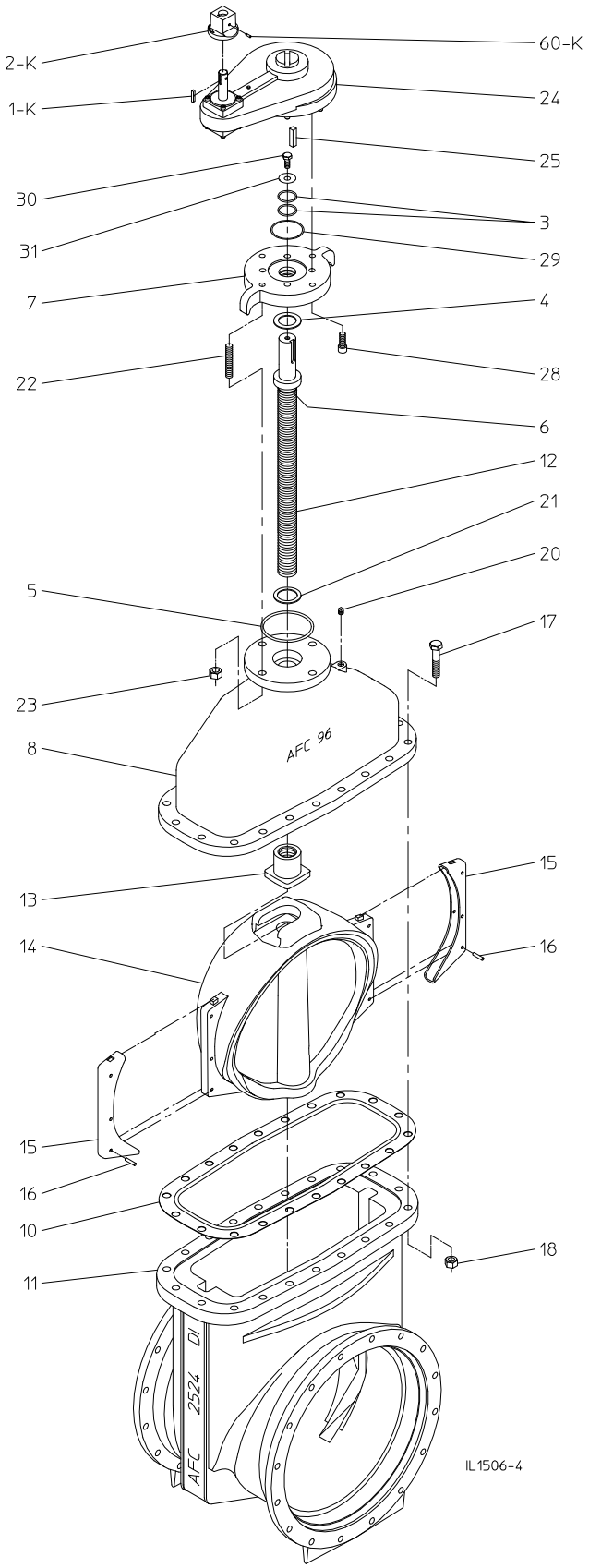

SERIES 2500 - NRS WITH SPUR GEARING PARTS LIST, 30” & 36” SIZES

Ref No.	Description	Material	Qty. Series 2500 30”	Qty. Series 2500 36”
1-K	Key 8 mm x 7 mm x 40 mm	Steel	1	1
2-K	Operating Nut, 2” Square	Ductile Iron	1	1
3	O-ring	Rubber	2	2
4	Upper Thrust Washer	Delrin	1	1
5	Stuffing Box Gasket	Rubber O-ring	1	1
6	O-ring	Rubber	1	1
7	Stuffing Box	Ductile Iron	1	1
8	Bonnet	Ductile Iron	1	1
10	Bonnet Gasket	Rubber	1	-
10	Bonnet Gasket	EPDM Rubber	-	1
11	Body	Ductile Iron	1	1
12	Stem	Bronze	1	1
		Stainless Steel (Optional)		
13	Wedge Nut	Bronze	1	1
14	Resilient Wedge	Ductile Iron, Coated With EPDM Rubber	1	1
15	Wedge Cover	Polymer	2	2
16	Wedge Cover Pin	Polymer	2	2
17	Hex Head Bolt, 1”-8 x 6”	Stainless Steel	24	-
17	Hex Head Bolt, 1-1/4-7 x 7”	Stainless Steel	-	28
18	Hex Nut, 1”-8	Stainless Steel	24	-
18	Hex Nut, 1-1/4-7	Stainless Steel	-	28
20	Pipe Plug, 3/8 NPT	Stainless Steel	4	4
21	Lower Thrust Washer	Delrin	1	1
22	Stud, 1”-8 x 6”	Stainless Steel	6	-
22	Stud, 1”-8 x 6-1/2”	Stainless Steel	-	8
23	Hex Nut, 1”-8	Stainless Steel	12	16
24	Spur Gear Operator 4:1	Rotork IS8	1	-
24	Spur Gear Operator 4:1	Rotork IS10	-	1
25	Square Key, 1/2 x 3-1/2	Hardened Steel	1	-
25	Square Key, 5/8 x 4”	Hardened Steel	-	1
28	Socket Head Cap Screw 3/4-10 x 2”	Stainless Steel	4	-
28	Socket Head Cap Screw 5/8-11 x 2”	Stainless Steel	-	8
29	Actuator Gasket	Rubber O-ring	1	1
30	Hex Head Bolt, 3/4-10 x 1”	Zinc Plated Steel	1	1
31	Washer	Steel	1	1
60-K	Spring Pin, 1/4 x 3/4”	Stainless Steel	1	1

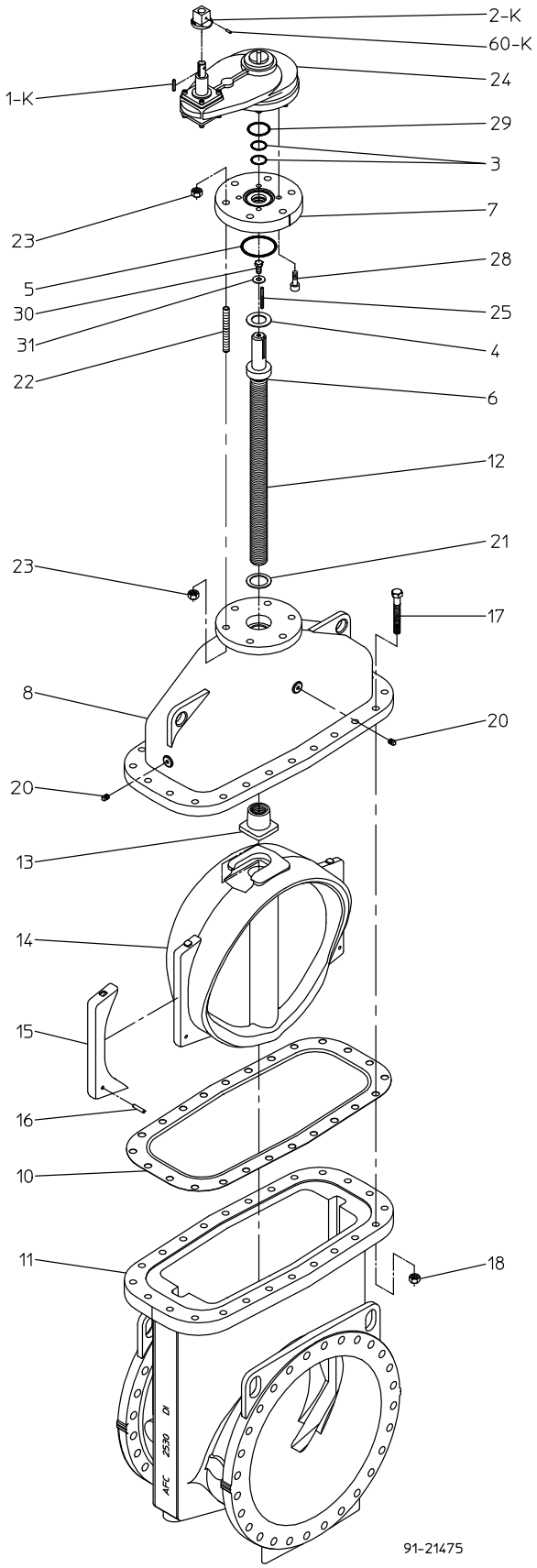

SERIES 2500 - NRS WITH SPUR GEARING PARTS LIST, 42”–54” SIZES

Ref No.	Description	Material	Qty. Series 2500		
			42”	48”	54”
1-K	Key 14 mm x 9 mm x 54 mm	Steel	1	1	1
2-K	Operating Nut, 2” Square	Ductile Iron	1	1	1
3	O-ring	Rubber	2	2	2
4	Upper Thrust Washer	Delrin	1	1	1
5	Stuffing Box Gasket	Rubber O-ring	1	1	1
6	O-ring	Rubber	1	1	1
7	Stuffing Box	Ductile Iron	1	1	1
8	Bonnet	Ductile Iron	1	1	1
10	Bonnet Gasket	EPDM Rubber	1	1	1
11	Body	Ductile Iron	1	1	1
12	Stem	Bronze	1	1	1
		Stainless Steel (Optional)			
13	Wedge Nut	Bronze	1	1	1
14	Resilient Wedge	Ductile Iron, Coated With EPDM Rubber	1	1	1
15	Wedge Cover	Polymer	2	2	2
16	Wedge Cover Pin	Polymer	2	2	2
17	Hex Head Bolt, 1-1/4-7 x 7-1/2”	Stainless Steel	32	-	-
17	Hex Head Bolt, 1-3/8-6 x 8-1/2”	Stainless Steel	-	36	36
18	Hex Nut, 1-1/4-7	Stainless Steel	32	-	-
18	Hex Nut, 1-3/8-6	Stainless Steel	-	36	36
20	Pipe Plug, 1/2 NPT	Stainless Steel	4	4	4
21	Lower Thrust Washer	Delrin	1	1	1
22	Stud, 1-1/4-7 x 7-1/2”	Stainless Steel	8	-	-
22	Stud, 1-1/4-7 x 7-3/4”	Stainless Steel	-	8	8
23	Hex Nut, 1-1/4-7	Stainless Steel	16	16	16
24	Spur Gear Operator 8:1	Rotork IS12	1	1	1
25	Square Key, 3/4 x 4-1/2	Hardened Steel	1	1	1
28	Socket Head Cap Screw 3/4-10 x 2-1/2”	Stainless Steel	8	8	8
29	Actuator Gasket	Rubber O-ring	1	1	1
30	Hex Head Bolt, 7/8-9 x 1-1/2”	Plated Steel	1	1	1
31	Washer	Steel	1	1	1
50-K	Set Screw 5/16-18 x 3/4”	Stainless Steel	1	1	1

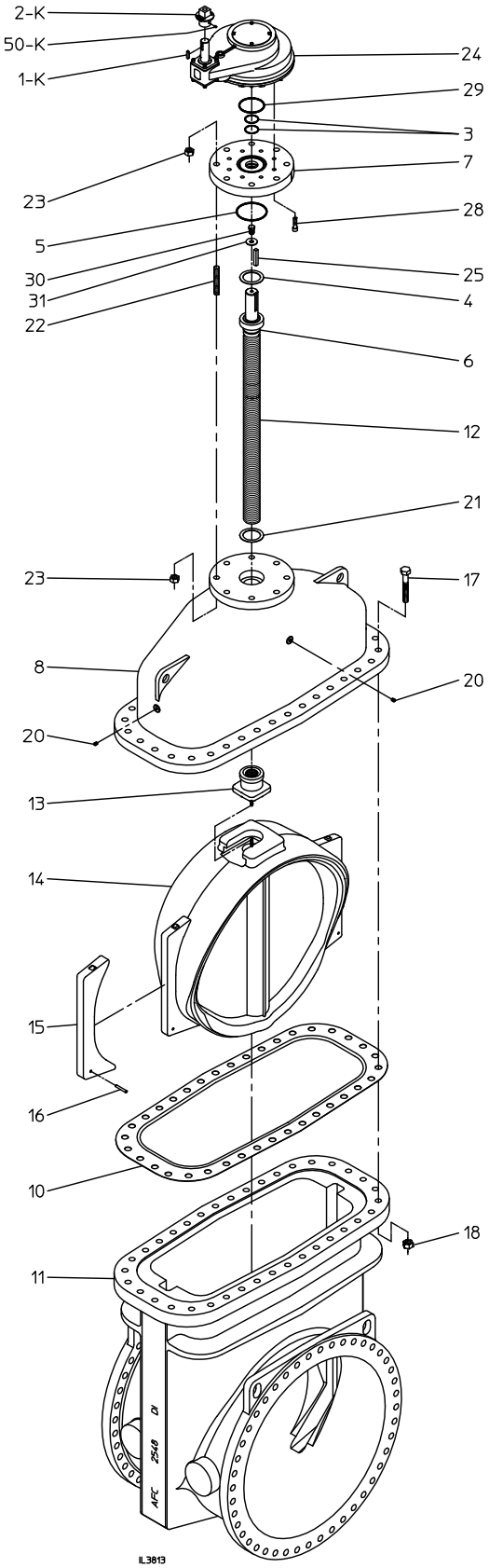

SERIES 2500 - NRS WITH SPUR GEARING PARTS LIST, 60” & 66” SIZES

Ref No.	Description	Material	Qty. Series 2500 60”	Qty. Series 2500 66”
1-K	Key 14 mm x 9 mm x 54 mm	Steel	1	1
2-K	Operating Nut, 2” Square	Ductile Iron	1	1
3	O-ring	Rubber	2	2
4	Upper Thrust Washer	Delrin	1	1
5	Stuffing Box Gasket	Rubber O-ring	1	1
6	O-ring	Rubber	1	1
7	Stuffing Box	Ductile Iron	1	1
8	Bonnet	Ductile Iron	1	1
10	Bonnet Gasket	EPDM Rubber	1	1
11	Body	Ductile Iron	1	1
12	Stem	Stainless Steel	1	1
13	Wedge Nut	Bronze	1	1
14	Resilient Wedge	Ductile Iron, Coated With EPDM Rubber	1	1
15	Wedge Cover	Polymer	4	4
16	Wedge Cover Pin	Polymer	4	4
17	Hex Head Bolt, 1-3/8-6 x 8-1/2”	Stainless Steel	32	32
18	Hex Nut, 1-3/8-6	Stainless Steel	32	32
20	Pipe Plug, 1/2 NPT	Stainless Steel	4	4
21	Lower Thrust Washer	Delrin	1	1
22	Stud, 1-1/4-7 x 7-1/2”	Stainless Steel	8	8
23	Hex Nut, 1-1/4-7	Stainless Steel	16	16
24	Spur Gear Operator 8:1	Rotork IS12	1	1
25	Square Key, 3/4 x 4-1/2	Hardened Steel	1	1
28	Socket Head Cap Screw 3/4-10 x 2-1/2”	Stainless Steel	8	8
29	Actuator Gasket	Rubber O-ring	1	1
30	Hex Head Bolt, 7/8-9 x 1-1/2”	Plated Steel	1	1
31	Washer	Steel	1	1
50-K	Set Screw 5/16-18 x 3/4”	Stainless Steel	1	1
55	Blind Flange	Ductile Iron	1	1
56	Stud, 5/8-11 x 3”	Stainless Sreel	8	8
57	Hex Nut, 5/8-11	Stainless Steel	8	8
83	Blind Flange Gasket	Rubber	2	2

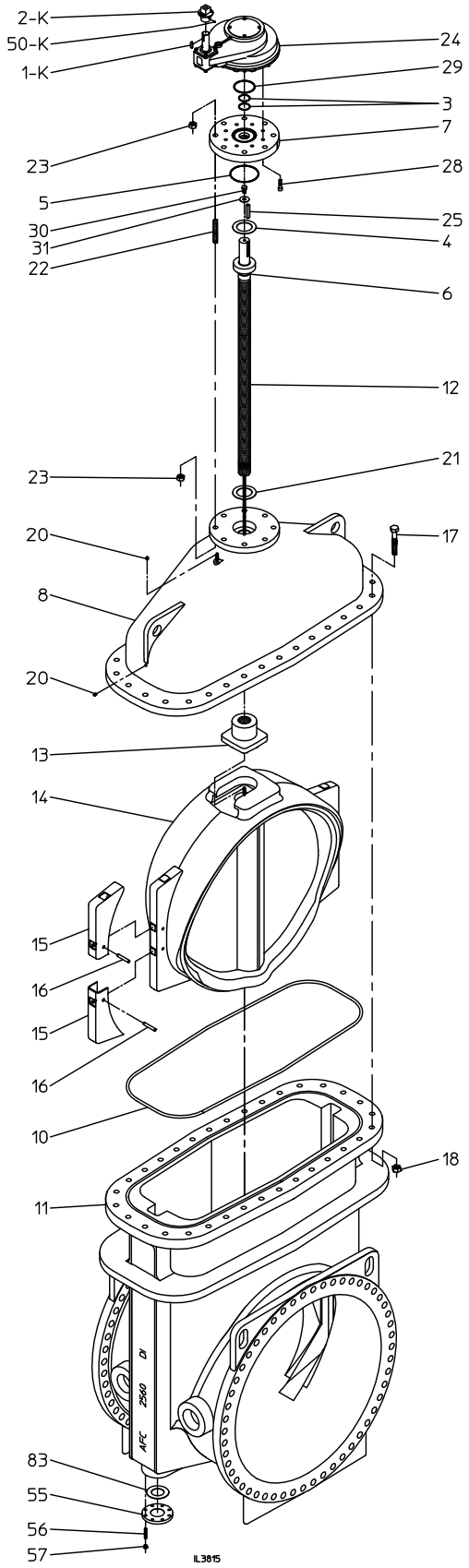

SERIES 2500 - OS & Y PARTS LIST, 2” SIZE

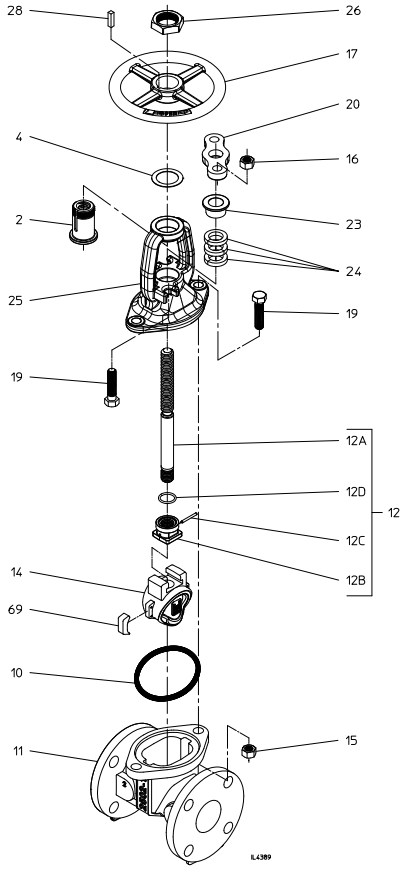

Reference Number	Description	Material	Qty. Series 2500
2	Yoke Nut	Bronze	1
4	Handwheel Washer	Nylon	1
10	Bonnet Gasket	Rubber	1
11	Body	Ductile Iron	1
12	Stem & Wedge Assembly	See Below	1
12A	Stem	304 Stainless Steel	1
12B	Wedge Nut	Bronze	1
12C	Groove Pin	Stainless Steel	1
12D	O-ring	Rubber	1
14	Resilient Wedge	Ductile Iron, Coated With EPDM Rubber	1
15	Hex Nut, 1/2-13	304 Stainless Steel	2
16	Hex Nut, 1/2-13	Brass	2
17	Handwheel	Ductile Iron	1
19	Hex Head Bolt, 1/2-13 x 2”	304 Stainless Steel	4
20	Gland Follower	Ductile Iron	1
23	Gland	Silicone Bronze	1
24	Packing Ring	PTFE Impregnated Braided Graphite	3
25	Bonnet	Ductile Iron	1
26	Handwheel Nut	Silicon Bronze	1
28	Square Key	Stainless Steel	1
69	Wedge Cover	Acetal Polymer	2

SERIES 2500 - OS&Y PARTS LIST, 2-1/2” & 3” SIZES

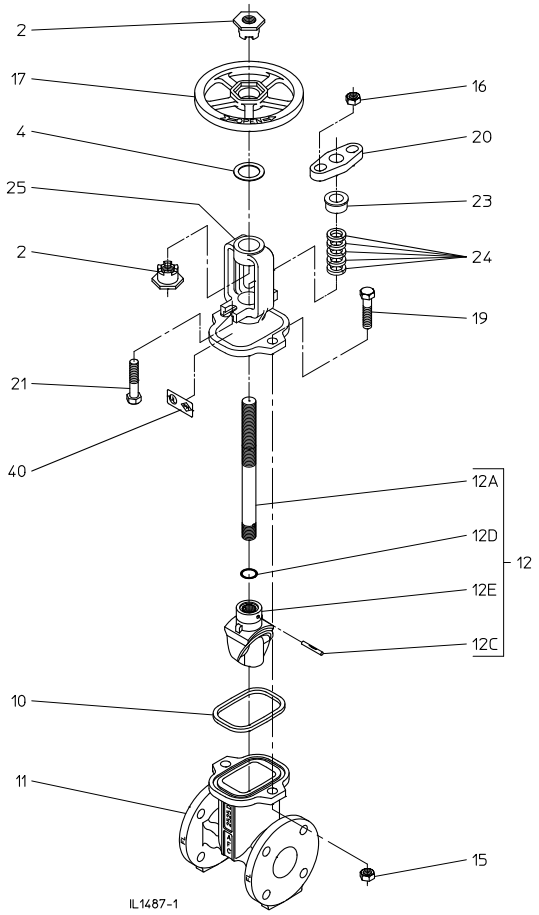

Reference Number	Description	Material	Qty. Series 2500 2-1/2”	Qty. Series 2500 3”
2	Stem Nut	Forging Brass	2	2
4	Handwheel Washer	Nylon	1	1
10	Bonnet Gasket	Rubber	1	1
11	Body	Ductile Iron	1	1
12	Stem & Wedge Assembly	See Below	1	1
12A	Stem	Bronze	1	1
		Stainless Steel (Optional)		
12C	Groove Pin	Stainless Steel	1	1
12D	O-ring	Rubber	1	1
12E	Resilient Wedge	Bronze, Coated With EPDM Rubber	1	1
15	Hex Nut, 5/8-11	Stainless Steel	2	2
16	Hex Nut, 5/8-11	Brass	2	2
17	Handwheel	Ductile Iron	1	1
19	Hex Head Bolt, 5/8-11 x 2-1/4”	Stainless Steel	2	2
20	Gland Follower	Ductile Iron	1	1
21	Hex Head Bolt, 5/8-11 x 2-1/2”	Stainless Steel	2	2
23	Gland	Sintered Bronze, OII Impregnated	1	1
24	Packing Ring	PTFE Impregnated Braided Graphite	5	6
25	Bonnet	Ductile Iron	1	1
40	UL/FM Label	Film	1	1

SERIES 2500 - OS&Y PARTS LIST, 4”–8” SIZES

Reference Number	Description	Material	Qty. Series 2500-1		
			4”	6”	8”
2	Stem Nut	Bronze	2	2	2
3	O-ring	Rubber	1	1	1
4	Handwheel Washer	Brass	1	1	1
5	Stuffing Box Gasket	Rubber	1	1	1
8	Bonnet	Ductile Iron	1	1	1
9	Hex Head Bolt, 5/8-11 x 2”	Stainless Steel	6	2	2
10	Bonnet Gasket	Rubber	1	1	1
11	Body	Ductile Iron	1	1	1
12	Stem	Bronze	1	1	1
		Stainless Steel (Optional)			
13	Wedge Nut	Bronze	1	1	1
14	Resilient Wedge	Ductile Iron, Coated With EPDM Rubber	1	1	1
15	Hex Nut, 5/8-11	Stainless Steel	6	8	10
16	Hex Nut, 5/8-11	Brass	2	2	2
17	Handwheel	Ductile Iron	1	1	1
18	Groove Pin	Stainless Steel	1	1	1
19	Hex Head Bolt, 5/8-11 x 2-1/4”	Stainless Steel	-	6	-
20	Gland Follower	Ductile Iron	1	1	1
21	Hex Head Bolt, 5/8-11 x 2-1/2”	Stainless Steel	-	-	8
22	Hex Head Bolt, 5/8-11 x 2-3/4”	Stainless Steel	2	2	2
23	Gland	Sintered Bronze, Oil Impregnated	1	1	1
24	Packing Ring	PTFE Impregnated Braided Graphite	6	6	6
25	Yoke	Ductile Iron	1	1	1
40	UL/FM Label	Pressure Sensitive Acrylic Film	1	1	1
69	Wedge Cover	Polymer	2	2	2

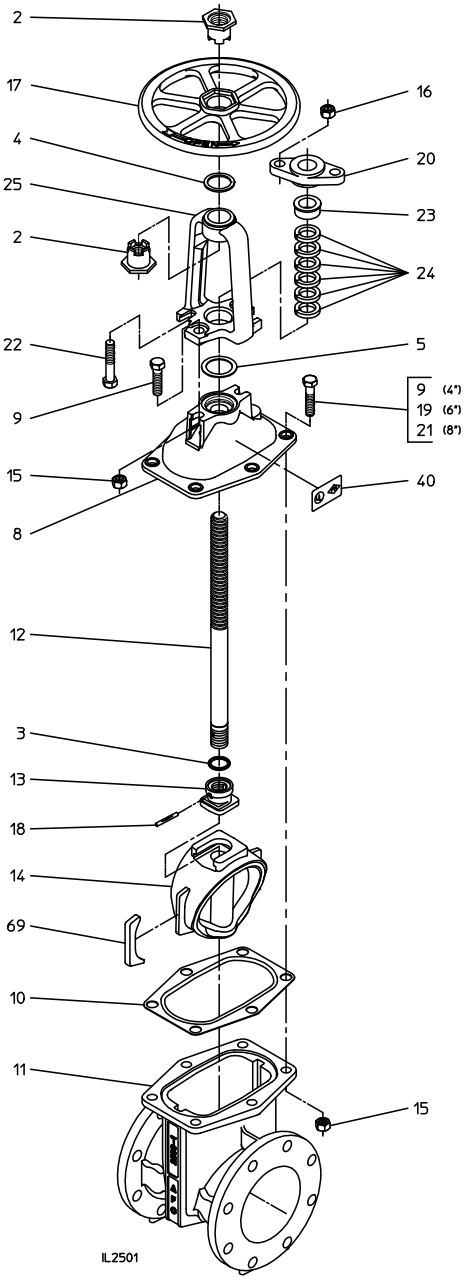

SERIES 2500 - OS&Y PARTS LIST, 10” & 12” SIZES

Reference Number	Description	Material	Qty. Series 2500-1	
			10”	12”
2	Yoke Nut	Bronze	1	1
4	Handwheel Washer	Brass	1	1
5	Stuffing Box Gasket	Rubber O-ring	1	1
8	Bonnet	Ductile Iron	1	1
9	Hex Head Bolt, 5/8-11 x 2”	Stainless Steel	6	2
10	Bonnet Gasket	Rubber	1	1
11	Body	Ductile Iron	1	1
12	Stem & Wedge Assembly	See Below	1	1
12A	Stem	Bronze Stainless Steel (Optional)	1	1
12B	Wedge Nut	Ductile Iron	1	1
12C	Groove Pin	Stainless Steel	1	1
12D	O-ring	Rubber	1	1
14	Resilient Wedge	Ductile Iron, Coated With EPDM Rubber	1	1
15	Hex Nut, 5/8-11	Stainless Steel	14	4
16	Hex Nut, 5/8-11	Brass	2	2
17	Handwheel	Ductile Iron	1	1
20	Gland Follower	Ductile Iron	1	1
21	Hex Head Bolt, 5/8-11 x 2-1/2”	Stainless Steel	4	4
22	Hex Head Bolt, 5/8-11 x 2-3/4”	Stainless Steel	10	-
23	Gland	Bronze	1	1
24	Packing Ring	PTFE Impregnated Braided Graphite	5	5
25	Yoke	Ductile Iron	1	1
26	Handwheel Nut	Cast Bronze	1	1
27	Hex Head Bolt, 5/8-11 x 4-1/4”	Stainless Steel	2	2
28	Square Key	Stainless Steel	1	1
40	UL/FM Label	Film	1	1
48	Hex Nut, 3/4-10	Stainless Steel	-	10
67	Hex Head Bolt, 3/4-10 x 3”	Stainless Steel	-	10
69	Wedge Cover	Polymer	2	2

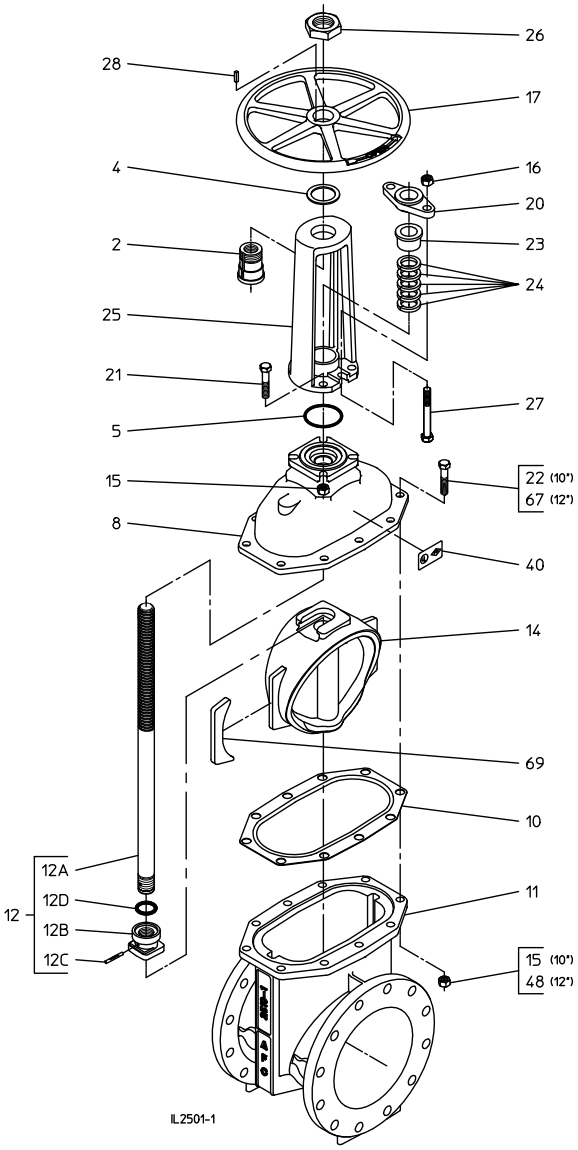

SERIES 2500 - OS & Y PARTS LIST, 14”–24” SIZES

Ref No.	Description	Material	Qty. Series 2500				
			14”	16”	18”	20”	24”
2	Yoke Nut	Bronze	1	1	1	1	1
4	Handwheel Washer	Brass	1	1	1	1	1
5	Stuffing Box Gasket	Rubber O-ring	1	1	1	1	1
8	Bonnet	Ductile Iron	1	1	1	1	1
10	Bonnet Gasket	Rubber	1	1	1	1	1
11	Body	Ductile Iron	1	1	1	1	1
12	Stem & Wedge Nut Assembly	See Below	1	1	1	1	1
12A	Stem	Stainless Steel	1	1	1	1	1
12B	Wedge Nut	Ductile Iron	1	1	1	1	1
12C	Groove Pin	Stainless Steel	1	1	1	1	1
12D	O-ring	Rubber	1	1	1	1	1
14	Resilient Wedge	Ductile Iron, Coated with EPDM Rubber	1	1	1	1	1
15	Wedge Cover	Polymer	2	2	2	2	2
16	Wedge Cover Pin	Polymer	2	4	4	2	2
17	Hex Head Bolt, 3/4-10 x 3-1/2”	Stainless Steel	14	16	-	-	-
17	Hex Head Bolt, 7/8-9 x 4”	Stainless Steel	-	-	16	-	-
17	Hex Head Bolt, 7/8-9 x 4-1/2”	Stainless Steel	-	-	-	18	-
17	Hex Head Bolt, 7/8-9 x 5”	Stainless Steel	-	-	-	-	20
18	Hex Nut, 3/4-10	Stainless Steel	14	16	-	-	-
18	Hex Nut, 7/8-9	Stainless Steel	-	-	16	18	20
20	Pipe Plug, 3/8 NPT	Stainless Steel	1	1	1	1	1
21	Gland Follower	Ductile Iron	1	1	1	1	1
23	Gland	Bronze	1	1	1	1	1
24	Packing Ring	PTFE Impregnated Braided Graphite	6 to 7	6 to 7	6 to 7	6 to 7	6 to 7
25	Yoke	Ductile Iron	1	1	1	1	1
26	Handwheel Nut	Bronze	1	1	1	1	1
28	Square Key	Stainless Steel	1	1	1	1	1
61	Handwheel	Ductile Iron	1	1	1	1	1
62	Hex Head Bolt 7/8-9 x 3-1/2	Stainless Steel	4	4	4	-	-
62	Hex Head Bolt 7/8-9 x 4	Stainless Steel	-	-	-	4	4
63	Hex Nut	Stainless Steel	4	4	4	4	4
64	Hex Head Bolt 5/8-11 x 3-1/2	Stainless Steel	2	2	2	2	2
65	Hex Nut	Brass	2	2	2	2	2
66	1/4” Zerk Fitting	Stainless Steel	1	1	1	1	1

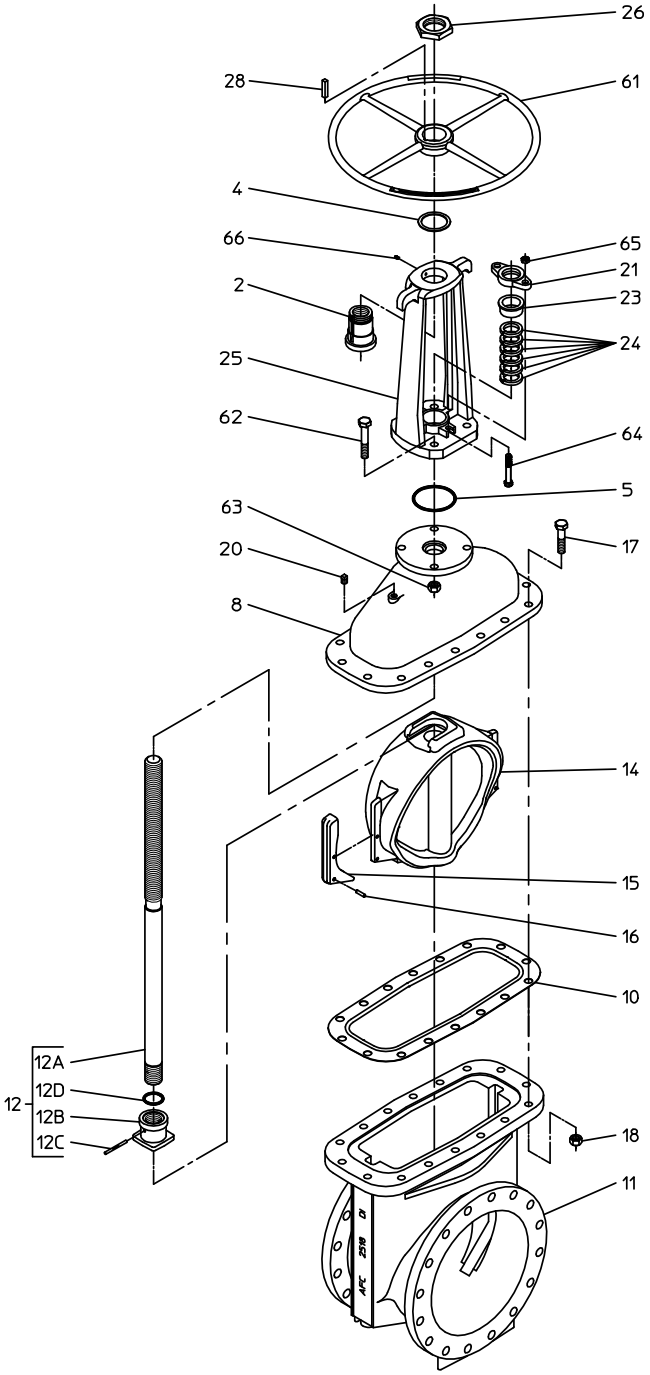

A key principle of design engineering is the selection of the proper material for an engineered product. Cost and durability are strong factors in selecting the material. Two materials with a long service history in the waterworks industry are gray and ductile iron. These two alloys are similar in chemical analysis but are quite different in mechanical properties. In gray iron, the graphite exists in an interconnected flake structure with the iron. Gray iron will fracture more readily along this continuous graphite iron flake structure. In ductile iron the graphite exists as discrete graphite nodules with more substantial areas of iron in between, forming a more stronger alloy than gray iron. These differences in the microstructure are reflected in the mechanical properties of the two irons. Ductile iron has superior mechanical properties and behaves more like steel in an engineering sense than does gray iron. By observing a few mechanical tests such as those defined in the American Society for Testing Materials (ASTM) E-8 standard test procedures, you can easily see the difference in the superior mechanical properties of ductile iron.

Tensile Test

Using a common tensile test with specimens of 11/32" diameter, you should see differences in the elongation of gray iron versus ductile iron. It is apparent that ductile has a certain amount of elongation and plasticity before fracture. In contrast, gray iron is a brittle material with plastic elongation so close to zero that it is not reported on a tensile test.

Charpy V-Notch Test

The Charpy V-Notch Test (ANSI/AWWA C151/A21.51) is another engineering test used to characterize the toughness of a material. The test is an impact test that measures the amount of energy required to fracture a standard 10mm x 10mm notched specimen. The greater the energy requirements, the tougher the material. Charpy tests are not routinely performed on gray iron as the results are always near zero, which indicates very low resistance to cracking. Ductile iron Charpy impact values range from 5 to 15 ft-lbs. The real value of ductile iron is its toughness and resistance to rough handling.

After considering the mechanical properties of a particular material, our design engineers are able to apply design rules to determine the section thickness and reinforcing scheme to meet the intended service conditions. AMERICAN engineers have used the superior mechanical properties of ductile iron to design a more rugged valve than required under the ANSI/AWWA C-509 standard. To demonstrate this point we tested 2 12 in. AMERICAN Flow Control gate valves - one made of gray iron and one made of ductile iron, to see how the mechanical properties we have discussed apply to the effectiveness of a completed product.

Pressure Test

The predecessor to the Series 2500 gate valve was the Series 500 gate valve. A test comparison of the two valves found significant differences in the performance of the valve designs. The 12 in. Series 500 gray iron resilient wedge gate valve is manufactured according to ANSI/AWWA C-509 Resilient Seated Gate Valve Standard. The valve is rated at 200 psig and has a safety factor to withstand significant pressure surges. This pressure test results in fracture of the bonnet flange at a pressure of 850 psig.

The 12 in. Series 2500 Ductile Iron resilient wedge gate valve is manufactured to conform to the requirements of the new reduced wall resilient wedge gate valve standard ANSI/AWWA C-515. It is rated at 250 psig with sufficient safety factor to withstand significant pressure surges. Pressure testing of the valve shell to failure generally results in "dishing" of the bonnet and body flange connection such that the bonnet gasket is blown out past the flange. The test case blew the bonnet gasket at 1500 psig without failure due to fracture of the shell. Although lighter in weight, the ductile iron valve is a more rugged design with the ability to withstand abuse during installation and possible extreme surge pressures.

Beam Load Test

Flanged end valve and piping components are not designed to bear a substantial beam load. We recommend that valve installations be executed in such a way that all beam loads on flanged components be eliminated. Unfortunately, settling of structures, slight misalignment, vibration, etc. can often result in induced beam loads, thus placing undue stress on flanged systems. To simulate an induced beam load, we connected two lengths of flanged ductile iron pipe to a 12 in. flange x flange gray iron valve with the valve closed and one end of the piping system pressurized to 100 psig. A vertical press was used to apply the load to the valve bonnet while supporting the ends of the pipe. This resulted in both hydrostatic and beam loads on the flanges of the valve and piping system. The vertical load on the valve was increased until the flange fractured. Failure occurred by fracture of the pipe flange at a beam load of 78,000 ft-lbs with a vertical deflection of 7/8 in.

Similar testing was performed on a 12 in. flange by flange reduced wall ductile iron valve with the valve closed and one end of the piping system pressurized to 100 psig. The vertical load was applied incrementally until fracture. Failure occurred by fracture of the pipe flange at a beam load of 135,000 ft-lbs. with a vertical displacement of 2 inches.

Gray iron or ductile iron? Ductile iron has the strength, durability and reliability to meet and exceed the requirements of the waterworks industry. Our ductile iron valves have the ability to resist high stress from internal and external loads.

SERIES 2500 - WEIGHTS

NRS Valve - Series 2500

End Connections	2-1/2”	3”	14”	16”	18”	20”	24”	30’	36”	42”	48”	54”	60”	66”
MJ x MJ	-	44	688	869	1162	1543	2356	4551	7469	11479	15880	-	-	-
FL x MJ (Class 125)	-	48	735	899	1151	1525	2248	4528	7388	11350	15925	-	-	-
FL x FL (Class 125)	46	52	735	909	1147	1509	2245	4448	7329	11320	15980	17084	27839	29549
FL x FL (Class 250)	-	68	968	1110	1437	1896	2919	5214	8418	12491	17787	-	-	-
TY x TY	-	-	-	-	-	-	-	-	-	-	-	-	-	-
FL x TY (Class 125)	-	-	-	-	-	-	-	-	-	-	-	-	-	-
PO x PO	-	-	691	898	-	-	-	-	-	-	-	-	-	-
PVC x PVC	41	47	-	-	-	-	-	-	-	-	-	-	-	-
Threaded x Threaded (Screw x Screw)	36	41	-	-	-	-	-	-	-	-	-	-	-	-
FL x MJ (Tapping)	-	-	755	925	1186	1596	2299	4506	7408	11364	15937	-	-	-
FX x FX (Flex-Ring)	-	-	-	987	-	1659	2473	4820	7621	11526	17381	-	-	-

NRS Valve - Series 2500-1

End Connections	Valve Size					
	Series 2500-1					
	2”	4”	6”	8”	10”	12”
MJ x MJ	17	58	97	147	230	333
FL x MJ (Class 125)	-	64	103	162	248	366
FL x FL (Class 125)	22	72	109	177	270	402
FL x FL (Class 250)	-	94	163	251	380	551
TY x TY	-	70	111	177	265	372
FL x TY (Class 125)	-	70	110	176	266	386
PO x PO	-	-	-	-	-	-
PVC x PVC	16	59	112	159	-	-
Threaded x Threaded (Screw x Screw)	13	-	-	-	-	-
FL x MJ (Tapping)	-	68	109	169	261	380
FX x FX (Flex-Ring)	-	-	118	-	-	-
AA x AA (ALPHA™)	-	72	112	190	274	382
AX x AX (ALPHA™ XL)	-	78	118	202	288	409
FL (Class 125) x AA (ALPHA™)	-	73	115	187	276	401
MJ x AA (ALPHA™)	-	-	107	-	-	-

OS & Y Valve - Series 2500 and 2500-1

End Connections		Series 2500 / Series 2500-1											
	2”	2-1/2”	3”	4”	6”	8”	10”	12”	14”	16”	18”	20”	24”
FL x FL (Class 125)	28	47	53	90	132	207	313	446	847	979	1250	1678	2386
FL x FL (Class 250)		-	69	112	185	282	427	600	976	1181	1540	2007	2951

NOTE: All weights are in pounds

ALPHA™ is a trademark of Romac Industries, Inc. (U.S. Patent 8,894,100)

AMERICAN Flow Control
SERIES 2500 DUCTILE IRON RESILIENT WEDGE GATE VALVE

SUBMITTAL SHEET

Qty	2”	2-1/2”	3”	4”	6”	8”	10”	12”	14”	16”	18”	20”	24”	30”	36”	42”	48”	54”	60”	66”

Actuator (Check One)

☐ NRS with 2” Sq. Operating Nut
☐ NRS with Handwheel

3” - 12” Valves Only

☐ NRS with Enclosed Miter Gearing

☐ NRS with T-Head Operating Nut
☐ Post Indicator Valve (PIV)

Also Specify

☐ 2” Sq. Operating Nut Parallel to Waterway
☐ 2” Sq. Operating Nut Perpendicular to Waterway
☐ Handwheel Perpendicular to Waterway

14” - 66 Valves Only

☐ NRS with Bevel Gears
☐ NRS with Spur Gears

Also Specify

☐ 2” Sq. Oper. Nut ☐ Handwheel

☐ OS & Y with Handwheel (2” - 24” Valves Only)

Open Direction: ☐ Left (CCW) ☐ Right (CW) ☐ Optional Stainless Steel Stems

End Connections:

Mechanical Joint Accessories ☐ Yes ☐ No

UL Listed, FM Approved: ☐ Yes ☐ No

Other Requirements (List on a Separate Sheet):

Available Configurations	Series 2500 / Series 2500-1																			
	2”	2-1/2”	3”	4”	6”	8”	10”	12”	14”	16”	18”	20”	24”	30”	36”	42”	48”	54”	60”	66”
ACTUATORS																				
NRS with 2” Sq. Operating Nut	X	X	X	X	X	X	X	X	X	X	X	X	X	N/A	N/A	N/A	N/A	N/A	N/A	N/A
NRS with T-Head Operating Nut	X	X	N/A	N/A	N/A	N/A	N/A	N/A	N/A	N/A	N/A	N/A	N/A	N/A	N/A	N/A	N/A	N/A	N/A	N/A
NRS with Handwheel	X	X	X	X	X	X	X	X	X	X	X	X	X	N/A	N/A	N/A	N/A	N/A	N/A	N/A
Post Indicator Valve (PIV)	N/A	X	X	X	X	X	X	X	X	X	X	X	X	N/A	N/A	N/A	N/A	N/A	N/A	N/A
NRS with Enclosed Miter Gearing	N/A	N/A	X	X	X	X	X	X	N/A	N/A	N/A	N/A	N/A	N/A	N/A	N/A	N/A	N/A	N/A	N/A
NRS with Bevel Gears	N/A	N/A	N/A	N/A	N/A	N/A	N/A	N/A	X	X	X	X	X	X	X	X	X	X	X	X
NRS with Spur Gears	N/A	N/A	N/A	N/A	N/A	N/A	N/A	N/A	X	X	X	X	X	X	X	X	X	X	X	X
OS & Y	X	X	X	X	X	X	X	X	X	X	X	X	X	N/A	N/A	N/A	N/A	N/A	N/A	N/A
END CONNECTIONS																				
Mech Joint x Mech Joint (MJ x MJ)	X	N/A	X	X	X	X	X	X	X	X	X	X	X	X	X	X	X	N/A	N/A	N/A
Flange x Flange, Class 125 (FL x FL, 125)	X	X	X	X	X	X	X	X	X	X	X	X	X	X	X	X	X	X	X	X
Flange x Flange, Class 250 (FL x FL, 250)	N/A	N/A	X	X	X	X	X	X	X	X	X	X	X	X	X	X	X	N/A	N/A	N/A
TYTON® x TYTON® (TY x TY)	N/A	N/A	N/A	X	X	X	X	X	Order Push-On Ends											
Push On x Push On (PO x PO)									X	X	N/A	N/A	N/A	N/A	N/A	N/A	N/A	N/A	N/A	N/A
PVC x PVC (PVC x PVC)	X	X	X	X	X	X	N/A	N/A	N/A	N/A	N/A	N/A	N/A	N/A	N/A	N/A	N/A	N/A	N/A	N/A
Threaded x Threaded (THD x THD)	X	X	X	N/A	N/A	N/A	N/A	N/A	N/A	N/A	N/A	N/A	N/A	N/A	N/A	N/A	N/A	N/A	N/A	N/A
Flange, Class 125 x Mech Joint (FL x MJ)	N/A	N/A	X	X	X	X	X	X	X	X	X	X	X	X	X	X	X	N/A	N/A	N/A
Flange, Class 125 x TYTON® (FL x TY)	N/A	N/A	N/A	X	X	X	X	X	N/A	N/A	N/A	N/A	N/A	N/A	N/A	N/A	N/A	N/A	N/A	N/A
Flex-Ring® x Flex-Ring® (FX x FX)	N/A	N/A	N/A	N/A	X	N/A	N/A	N/A	N/A	X	N/A	X	X	X	X	X	X	N/A	N/A	N/A
ALPHA™ x ALPHA™ (AA x AA)	N/A	N/A	N/A	X	X	X	X	X	N/A	N/A	N/A	N/A	N/A	N/A	N/A	N/A	N/A	N/A	N/A	N/A
ALPHA™ XL x ALPHA™ XL (AX x AX)	N/A	N/A	N/A	X	X	X	X	X	N/A	N/A	N/A	N/A	N/A	N/A	N/A	N/A	N/A	N/A	N/A	N/A
Flange, Class 125 x ALPHA™ (FL, 125 x AA)	N/A	N/A	N/A	X	X	X	X	X	N/A	N/A	N/A	N/A	N/A	N/A	N/A	N/A	N/A	N/A	N/A	N/A
Mech Joint x ALPHA™ (MJ x AA)	N/A	N/A	N/A	N/A	X	N/A	N/A	N/A	N/A	N/A	N/A	N/A	N/A	N/A	N/A	N/A	N/A	N/A	N/A	N/A

KEY: X = Available N/A = Not Available

NOTES:

1. 3 in.–54 in. valves meet or exceed requirements of ANSI/AWWA C515 with 250 psig rated working pressure.
2. 2–, 2-1/2–, 42–, 48–, 54–, 60– and 66–in. valves have 250 psig rated working pressure but are not included in ANSI/AWWA C515.
3. 2 in. - 66 in. valves are Certified to NSF/ANSI Standard 61 and NSF/ANSI 372.
4. Fusion bonded epoxy coating meets or exceeds requirements of ANSI/AWWA C550.
5. See separate submittal sheet for tapping valves.
6. 2 in.–24 in. valves may be ordered in configurations that are UL Listed and Approved by FM Approvals.
7. TYTON® is a registered trademark of United States Pipe and Foundry Co., LLC.
8. ALPHA™ is a trademark of Romac Industries, Inc. (U.S. Patent 8,894,100)

Storage

Valves are palletized when shipped, which provides suitable protection from weather and sunlight during storage. If palletizing is disbanded and valves removed, remaining valves should be suitably covered or stored elsewhere with the valve stem vertical.

- Always store valves fully closed.
- When possible, keep valves out of the weather.
- In cold climates, keep the inside of the valve drained of any water to prevent freezing.
- Whenever possible, cover valves with a waterproof covering.
- Protect all parts of the valve at all times

Inspection Before Installation

- Check to make sure that the valve end connections are clean and that the valve is not damaged.
- Check opening direction and other details against specification.
- Open and close the valve to make sure it works properly.
- Clean the inside of the valve to remove all contaminants that may affect water system purity.

  Keep the valve closed when placing in trench.

Installation

1. Handle the valve carefully.
2. **Check all bolts for tightness.** Gaskets may shrink during storage and might leak if the bolts are not retightened.
3. Prepare pipe ends in accordance with pipe manufacturer's instructions.
4. Install the valve as per appropriate instructions for the specified joint (flanged, mechanical joint, PVC, etc.)

   NOTE: Only use 1/8" thick rubber "ring" type gaskets Do not use composition or flat full-face gaskets.
5. **Be sure that the water main is properly supported to avoid line stress on the valve. Make sure the valve is properly supported and that no stress is transferred to the adjoining pipeline. Due to the exponential increase in the weight of larger size valves, proper installation bedding and support is essential. Failure to make provisions for the weight of the valve can result in design and/or installation failure.**
6. In buried applications, make sure that the valve box does not transmit traffic loads or other stress to the valve.
7. Do not use valves to force a pipeline into position. Do not deflect any valve/pipe joint.

Reference Material

These reference materials are available and should be helpful in the installation and testing of gate valve products.

ANSI/AWWA C515	Reduced-Wall, Resilient-Seated Gate Valves
ANSI/AWWA C500	Metal-Seated Gate Valves - 3" - 48"
ANSI/AWWA C600	Installation of Ductile-Iron Water Mains
ANSI/AWWA M23	PVC Pipe - Design and Installation.

All installation, operation and maintenance instructions issued by the manufacturer of the pipe and the valves.

Valve user guides as published by MSS.

NFPA-24	Private Fire Service Mains and Their Appurtenances

These industry practices have been listed to help you make a safe and acceptable installation of a gate valve.

Testing Procedure

1. Check to see that all valve joints and pressure containing bolting are tight.
2. Valves should never be tested beyond the rated working pressure.
3. After testing, steps should be taken to relieve any trapped pressure in the body of the valve.

SERIES 2500 - CLASS 125 FLANGED VALVE INSTALLATION, 4”–12” SIZES

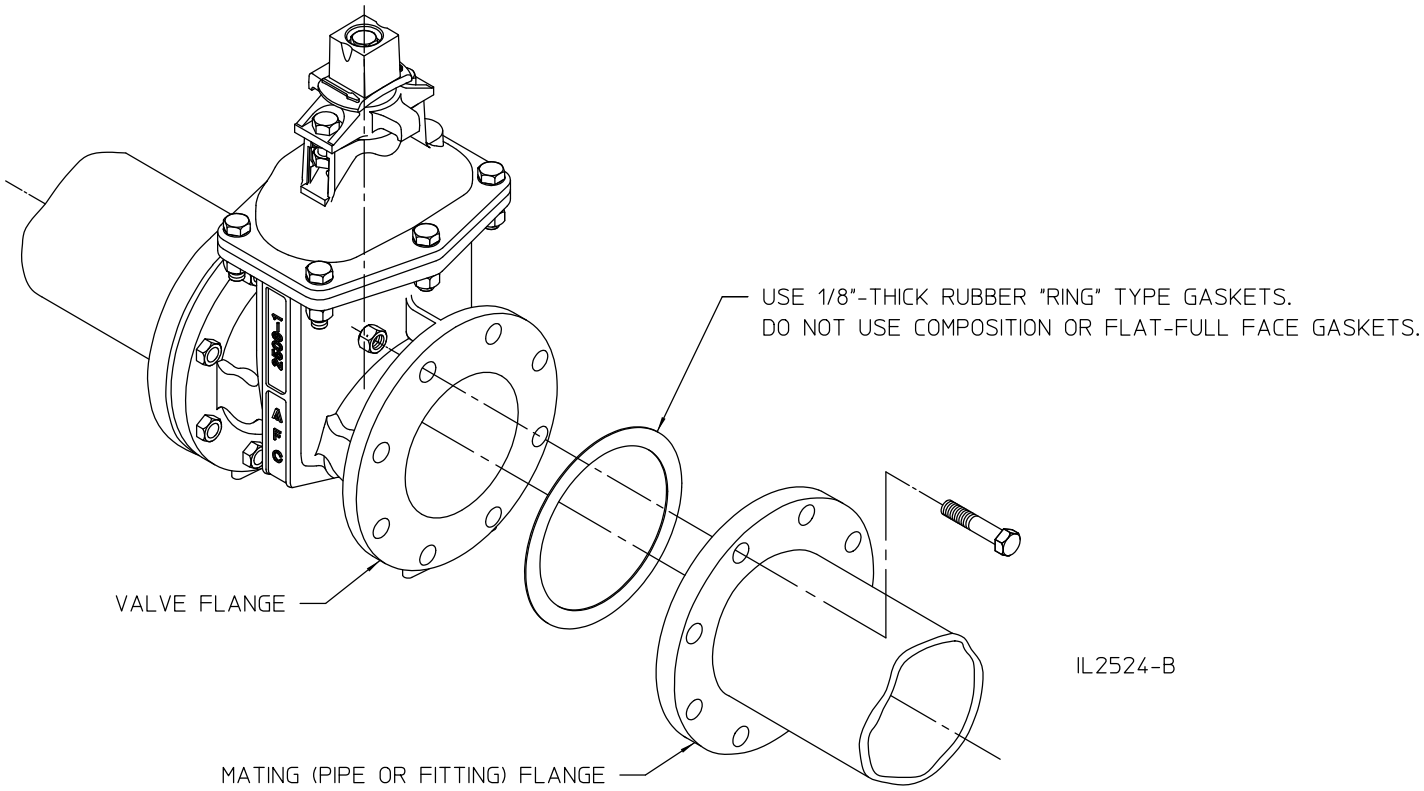

ALPHA™ Restraint Joint Installation Instructions

Read installation instructions first before installing. Check parts to ensure that no damage has occurred during transit and that no parts are missing.

ALPHA restraint joints will accommodate the following pipe types and sizes:

ALPHA

- Ductile iron per AWWA C151
- PVC per ASTM D1785 (Schedule 40 and 80)
- PVC per ASTM D2241 (SDR 21)
- PVC per AWWA C900
- HDPE per AWWA C906 (SDR 9, 11, 13.5, and 17)

ALPHA XL

- Gray iron (Class A, B, C, and D)

Nominal Size (in)	ALPHA OD Range (in)	ALPHA XL OD Range (in)
4	4.50 - 4.90	4.80 - 5.10
6	6.60 - 7.00	6.90 - 7.10
8	8.60 - 9.10	9.05 - 9.40
10	10.75 - 11.20	11.10 - 11.45
12	12.75 - 13.30	13.20 - 13.60

1. Compare diameter of pipe with those listed above to ensure that the correct size joint has been selected.

2. Remove any scale or debris that could interfere with the grippers' engagement with the pipe. Clean the pipe surface wherever the gasket will come in contact with the pipe, and check to see that the pipe surface is smooth (no depressions, projections, gouges, etc.) where the gaskets seal against the pipe. Also verify that the pipe is round within the OD limits described in step 1 and that the pipe cut is square.

3. Mark the OD of the pipe as a means of verifying full insertion in the joint. The pipe should be marked at the following locations as measured from the end of the pipe.

Nominal Size (in)	Distance From the End of Pipe (inches)	
	ALPHA	ALPHA XL
4	3.50	4.25
6	3.75	4.00
8	5.00	5.50
10	5.13	5.63
12	5.38	6.00

4. Lubricate the gasket and pipe surface with a suitable gasket lubricant.

5. With the nut unthreaded to the end of the bolt and the end ring rotated as far counterclockwise as possible, insert pipe into the ALPHA socket until it contacts the pipe stop. The mark applied to the pipe OD in step 3 should be aligned with the edge of the pipe socket.

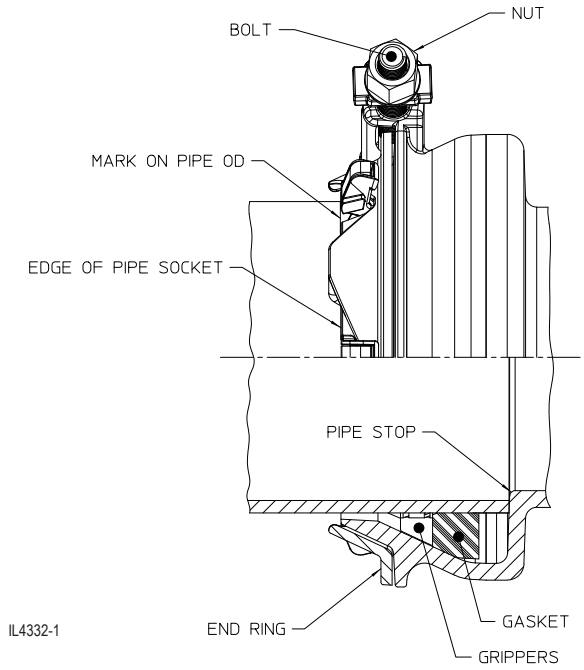

ALPHA™ is a licensed trademark of Romac Industries, Inc. (U.S. Patent 8,894,100)

6. Set the desired pipe deflection angle (4° maximum). ALPHA XL installations on pipe at the top of the OD range may have limited deflection (2° maximum).

Note: Do not deflect pipe joint after installation.

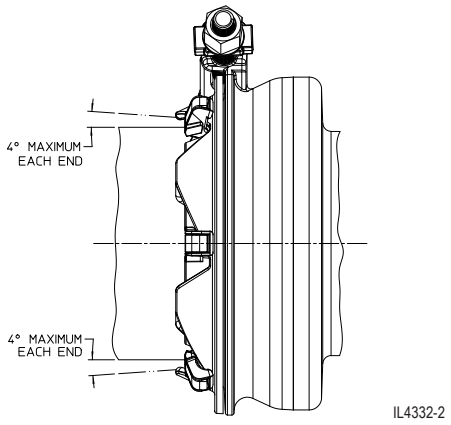

7. Tighten nut until the gasket contacts the pipe and the pipe is snugly held in place. This should happen after applying approximately 10-15 ft-lbs of torque.

8. Tighten the nut to the torque value shown in the table below and confirm that the grippers are contacting the pipe.

Nominal Size (in)	Torque (ft-lbs)
4	30
6	30
8	45
10	45
12	45

Note: Do not overtorque or retighten. If a good seal is not achieved after tightening nut to the torque value shown in the table above, check condition of pipe (Step 2), verify maximum pipe deflection is not exceeded (Step 6), and ensure pipe is fully inserted into the socket and contacting the pipe stop.

9. Confirm proper installation by pressurizing the line and checking for leaks.

10. Backfill and compact carefully around the pipe and joint.

PRECAUTIONS

1. Make sure no foreign material is trapped between the gasket and pipe, between the grippers, or in the end ring mechanism.
2. Carefully inspect gasket for damage and ensure that the cut end of the pipe has been sufficiently deburred to prevent damage to the gasket during installation.
3. Keep bolt threads free of debris to allow proper tightening.
4. To ensure proper nut tightening, use of a torque wrench with a 1-1/16-inch deep-well socket is recommended. Do not overtorque. Do not use an impact wrench.
5. Do not strike or pry on the joint with hammers, shovels, or other equipment.
6. Operating pressure shall not exceed whichever is lower; the rated working pressure of the pipe, or that of the adjoining valve or hydrant.
7. When used with HDPE pipe, application shall be limited to service with water temperature between 32° F and 85° F.
8. For cold weather conditions (below 40° F), performance can be improved by warming the joint and gasket.
9. Per ANSI/AWWA C605, which governs the installation of PVC pipe, the factory bevel on PVC pipe may need to be removed or shortened to ensure gasket contact when used with fittings, valves, hydrant and other appurtenances.
10. The use of ALPHA restraint joints on valves and fire hydrants shall be limited to buried (non-exposed) applications.
11. ALPHA is not intended for use on the plain end of a fitting, or other similarly hard material.

WARNING: Special care should be taken in the installation, inspection and repair of pressure containing devices such as valves and hydrants. FAILURE TO FOLLOW PROPER PRACTICE AND GUIDELINES CAN RESULT IN SERIOUS INJURY OR DEATH. Do not make repairs while valve is under pressure.

Operation

1. Direction of opening is normally indicated by an arrow cast on the handwheel or wrench nut of the valve.
2. Operate gate valves from full closed to full open position and back before applying pressure.
3. Close gate valve slowly against pressure to avoid damage from surge or water hammer.
4. Valves installed on liquid service subject to freezing conditions should be protected to prevent trapping of liquid in the bonnet cavity, expansion on freezing and subsequent damage. The same is true of valves that are subject to considerable temperature increases. Trapped pressure should be vented back to the upstream side to prevent buildup of pressure in the valve bonnet due to high temperature expansion.
5. Valves should be opened and closed without the use of excessive torque applied to the handwheel or wrench nut. Excessive torque may damage the valve.
6. Gate valves are designed for open and close service. Their multi-turn design is not intended for throttling. As such, the valve should never be left in a partial open or closed position for extended periods.

Maintenance

1. Operate valves at regular intervals. The necessary length of time between the operation of the valve depends upon the time the valve has been in service and the service conditions, but more specifically whatever time period is found to be satisfactory based on local experience. Operation should occur as a minimum of once per year, but in general as detailed in Section A.6, of Appendix A, of ANSI/AWWA C515.
2. Should disassembly or operation require additional lubrication, use an AMERICAN Flow Control recommended food grade grease for the stem threads and thrust collar.
3. Chipped spots in the epoxy coating should be repaired with a liquid two-part epoxy.

Spare Parts

Under most conditions, the only spare parts needed for the valve would be upper and lower stem O-rings. Under rigorous service, stems, wedges, upper and lower stem O-rings and thrust washers should be carried as spare parts.

Use parts list drawings as a guide for disassembly and ordering repair parts. Also refer to disassembly/reassembly instructions.

Typical Operating Torque At Rated Working Pressure

Valve Size	Closing Torque Ft-lbs	Opening Torque Ft-lbs
2”	15-20	15-20
2-1/2”	15-20	15-20
3”	30-40	30-40
4”	30-40	30-40
6”	50-60	50-80
8”	70-80	60-90
10”	90-100	125-150
12”	100-125	140-175
14”	Contact Factory	
16”	Contact Factory	
18”	Contact Factory	
20”	Contact Factory	
24”	Contact Factory	
30”	Contact Factory	
36”	Contact Factory	
42”	Contact Factory	
48”	Contact Factory	
54”	Contact Factory	
60”	Contact Factory	
66”	Contact Factory	

Problem	Solution
Leakage	**Depending on the location of the leakage, the following should be examined.** 1. SEAT: Foreign material may be stuck under the valve wedge. Open valve only enough to get high velocity flow to flush out valve. Repeat several times until leak stops. If this does not solve the problem, it is then necessary to open the valve and check for damage to the rubber encapsulated wedge. If it is damaged or severely cut, replace the wedge. 2. STEM: The stem seals are of the O-ring type and the valve has a thrust collar (electric actuated valves normally do not have thrust collars). Always relieve pressure before working on any valve. Check all O-ring seals for leakage and replace as necessary. On OS&Y valves leakage can be stopped by evenly tightening the packing gland bolts. If leakage cannot be stopped, the valve should be repacked. 3. BODY: Check for cracked or damaged valve body or bonnet. If damage has occurred, contact manufacturer for further instructions. 4. BOLTED CONNECTIONS: Check for loose bonnet-to-body bolts, stuffing box bolts or end joint bolts and tighten as necessary. This should be done prior to pressurization of the line. If line is pressurized, pressure should be relieved prior to tightening any bolts. Do not tighten bolts past the yield strength of the bolt. Reinstall all bolts and nuts and tighten alternately to 70-90 ft-lbs of torque.
Valve is Hard to Operate or Is Inoperable	1. A valve can become inoperable or hard to operate during testing of the pipeline. Prior to relieving pipeline pressure, the valve should be opened to relieve any trapped pressure. 2. The application of excessive torque on a valve can cause permanent damage to the operating parts. A common source of excessive torque is from the use of portable power actuators. Output torques generated by these machines should be adjusted to be suitable for the valve size. The last or first turns of operation should be done by hand. **Number of Turns to Open/Close** Series 2500 / Series 2500-1 2” 2-1/2” 3” 4” 6” 8” 10” 12” 14” 16” 18” 20” 24” 30” 36” 42” 48” 54” 60” 66” 9 11 13 14 20 26 32 38 44 50 56 62 76 379 448 694 789 789 984 984 Note: 24” and smaller reflect non-geared valves. 30” and larger reflect geared valves 3. If valve has not been operated periodically, excessive buildup could occur that would affect valve operation. The valve should be exercised one turn at a time and cycled from open to closed as necessary to attempt removal of internal buildup.
Valve Leaks During Testing	1. Resilient seated gate valves per ANSI/AWWA C515 have a zero allowable leakage rate. If a leak is detected while testing, it is necessary to find the cause. 2. If seat leakage is detected, it may be due to foreign material or trapped air in the line. Open the valve enough to get high velocity flow to flush out valve. Repeat several times until leakage stops. 3. If testing between valves, allow enough time to fill the valve and vent off air.

WARNING: Special care should be taken in the installation, inspection and repair of pressure containing devices such as valves and hydrants. FAILURE TO FOLLOW PROPER PRACTICE AND GUIDELINES CAN RESULT IN SERIOUS INJURY OR DEATH. Do not make repairs while valve is under pressure.

Disassembly

1. Remove bolts and nuts that attach operating nut and stuffing box.
2. Remove operating nut and stuffing box.
3. Back stem out of bonnet by turning in the closing direction.
4. Inspect O-rings and, if damaged, remove from stuffing box and stem. Replace with new O-rings and lubricate with food grade grease.
5. Inspect thrust washers and stuffing box gasket (O-ring) and replace if damaged.
6. Remove bolts and nuts that attach bonnet to valve body. Remove bonnet to inspect bonnet gasket, wedge and interior of valve body. Replace parts if damaged.

Reassembly

Reassembly is the reverse of disassembly while paying attention to the following points.

1. Make sure the bonnet gasket is positioned correctly on the valve body flange when bonnet is assembled onto valve body.
2. Lubricate stem threads with an AMERICAN Flow Control recommended food grade grease before installing into bonnet and threading into wedge nut. Turn stem in opening direction.
3. Position stuffing box gasket in top of bonnet and slide stuffing box onto stem being careful not to cut the stem seal O-rings.
4. Reinstall all bolts and nuts and tighten alternately to 70-90 ft-lb of torque.

SERIES 2500 - STANDARD NRS REPAIRS, 2-1/2" & 3"

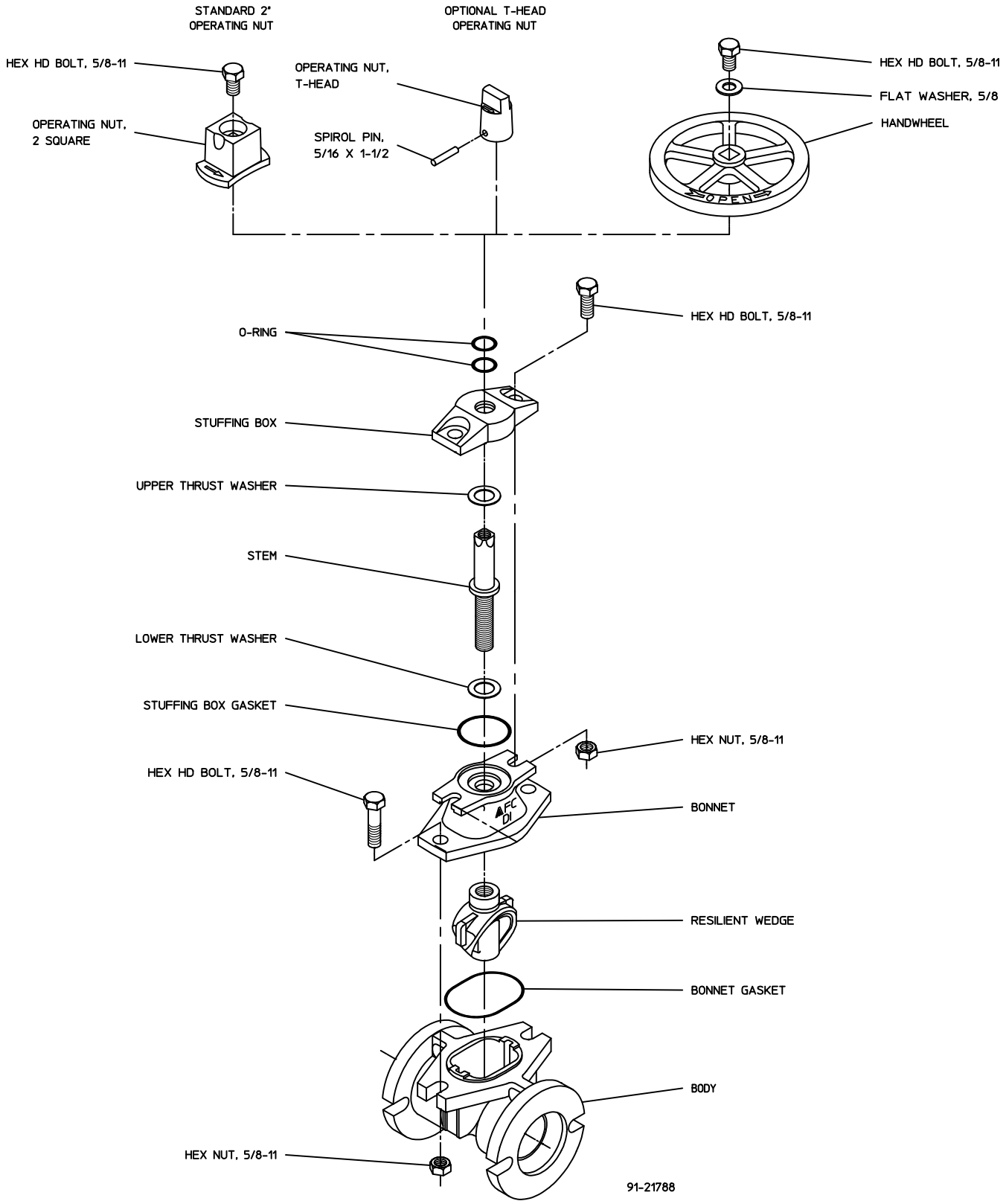

SERIES 2500 - STANDARD NRS REPAIRS, 2”

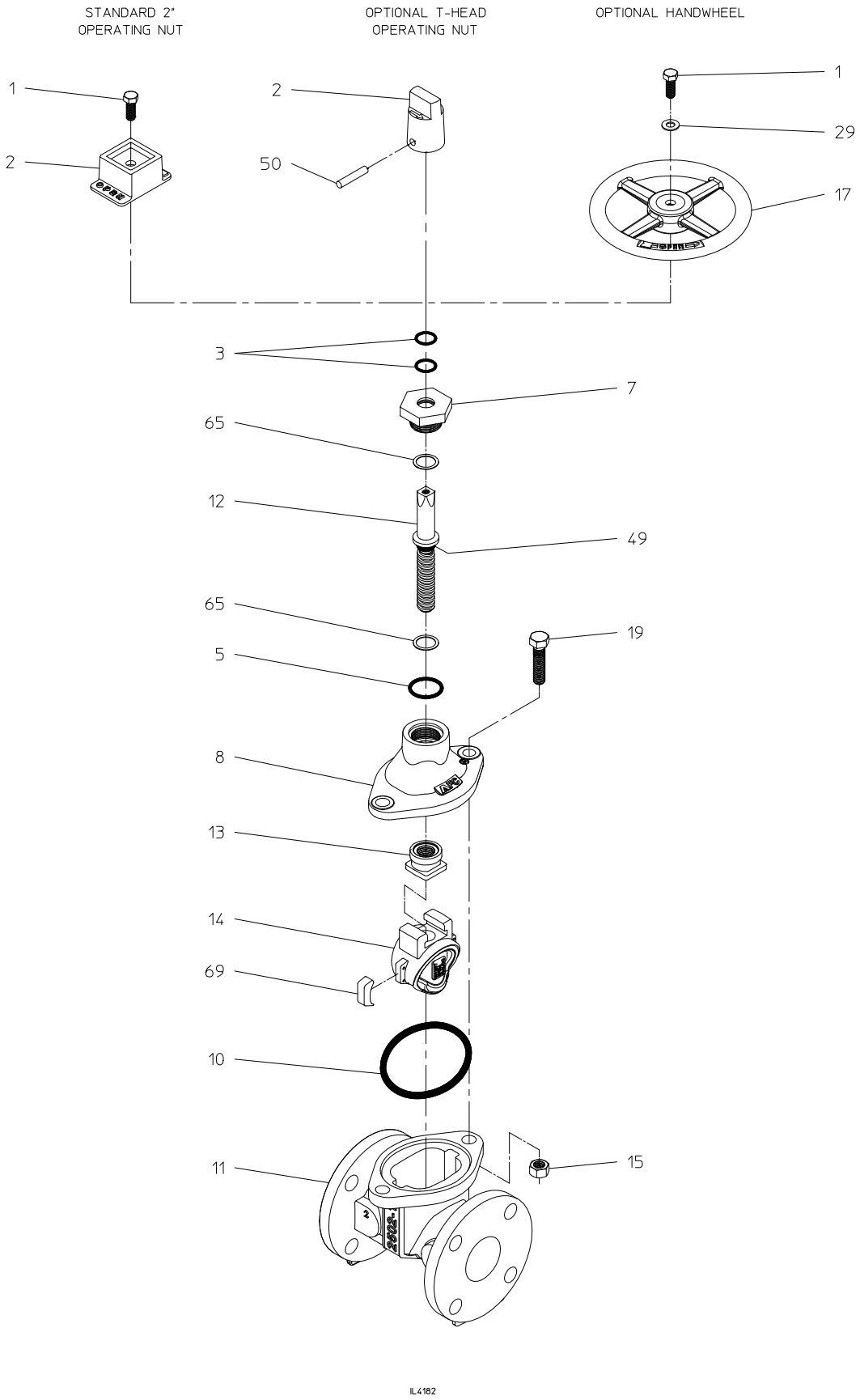

WARNING: Special care should be taken in the installation, inspection and repair of pressure containing devices such as valves and hydrants. FAILURE TO FOLLOW PROPER PRACTICE AND GUIDELINES CAN RESULT IN SERIOUS INJURY OR DEATH. Do not make repairs while valve is under pressure.

Disassembly

1. Remove bolts and nuts that attach operating nut and stuffing box.
2. Remove operating nut and stuffing box.
3. Back stem out of bonnet by turning in the closing direction.
4. Inspect O-rings and, if damaged, remove from stuffing box and stem. Replace with new O-rings and lubricate with food grade grease.
5. Inspect thrust washers and stuffing box gasket (O-ring) and replace if damaged.
6. Remove bolts and nuts that attach bonnet to valve body. Remove bonnet to inspect bonnet gasket, wedge nut, wedge and interior of valve body. Replace parts if damaged.

Reassembly

Reassembly is the reverse of disassembly while paying attention to the following points.

1. Make sure wedge nut is seated fully into slot in wedge.
2. Make sure the bonnet gasket is positioned correctly on the valve body flange when bonnet is assembled onto valve body.
3. Lubricate stem threads with an AMERICAN Flow Control recommended food grade grease before installing into bonnet and threading into wedge nut. Turn stem in opening direction.
4. Position stuffing box gasket in top of bonnet and slide stuffing box onto stem being careful not to cut the stem seal O-rings.
5. Reinstall all bolts and nuts and tighten alternately to 70-90 ft-lb of torque.

SERIES 2500 - STANDARD NRS REPAIRS, 4”–8”

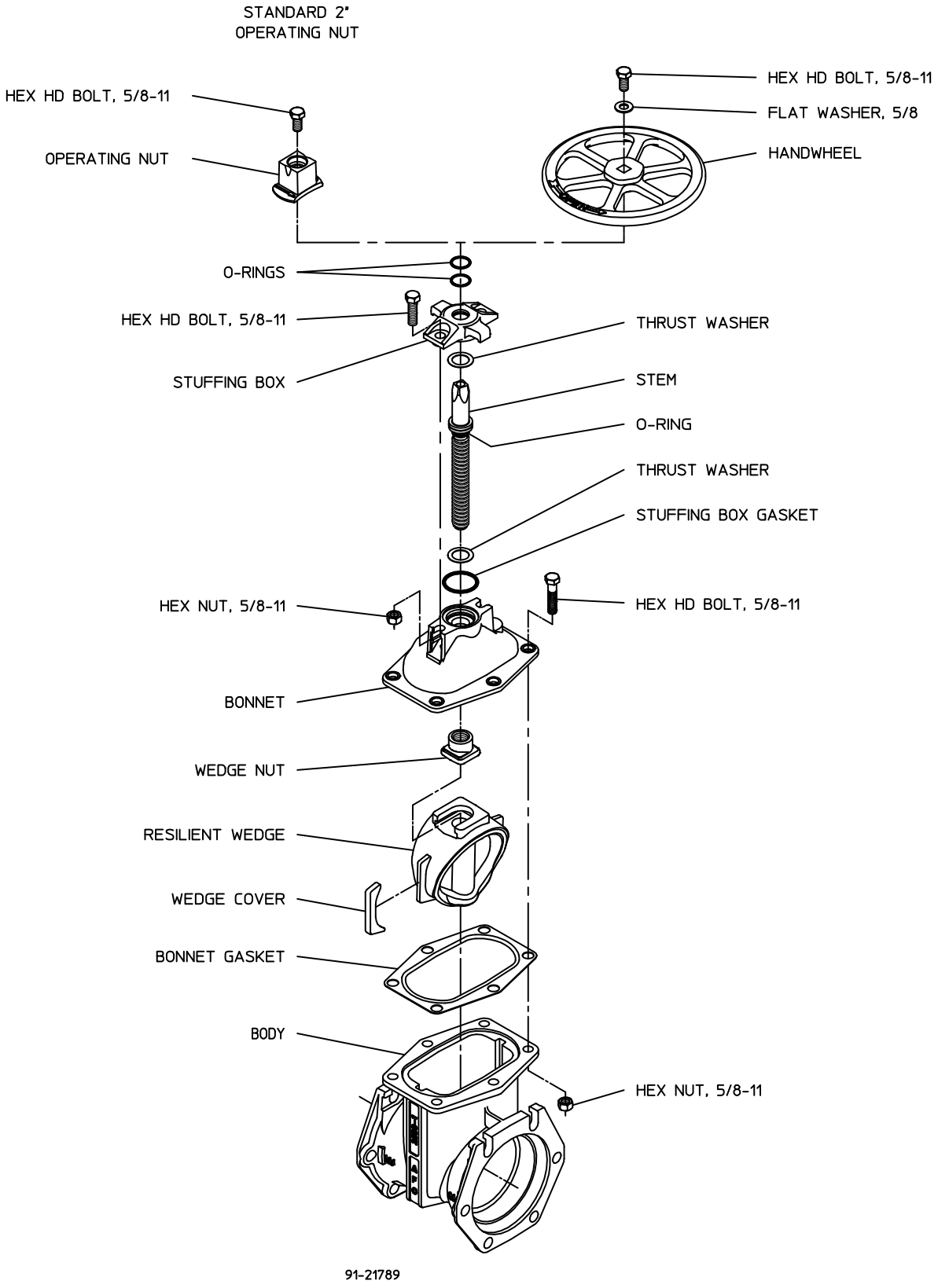

WARNING: Special care should be taken in the installation, inspection and repair of pressure containing devices such as valves and hydrants. FAILURE TO FOLLOW PROPER PRACTICE AND GUIDELINES CAN RESULT IN SERIOUS INJURY OR DEATH. Do not make repairs while valve is under pressure.

Disassembly

1. Remove bolts and nuts that attach operating nut and stuffing box.
2. Remove operating nut and stuffing box.
3. Back stem out of bonnet by turning in the closing direction.
4. Inspect O-rings and, if damaged, remove from stuffing box and stem. Replace with new O-rings and lubricate with food grade grease.
5. Inspect thrust washers and stuffing box gasket (O-ring) and replace if damaged.
6. Remove bolts and nuts that attach bonnet to valve body. Remove bonnet to inspect bonnet gasket, wedge nut, wedge and interior of valve body. Replace parts if damaged.

Reassembly

Reassembly is the reverse of disassembly while paying attention to the following points.

1. Make sure wedge nut is seated fully into slot in wedge.
2. Make sure the bonnet gasket is positioned correctly on the valve body flange when bonnet is assembled onto valve body.
3. Lubricate stem threads with an AMERICAN Flow Control recommended food grade grease before installing into bonnet and threading into wedge nut. Turn stem in opening direction.
4. Position stuffing box gasket in top of bonnet and slide stuffing box onto stem being careful not to cut the stem seal O-rings.
5. Reinstall all bolts and nuts and tighten alternately to 70-90 ft-lb of torque.

SERIES 2500 - STANDARD NRS REPAIRS, 10” & 12”

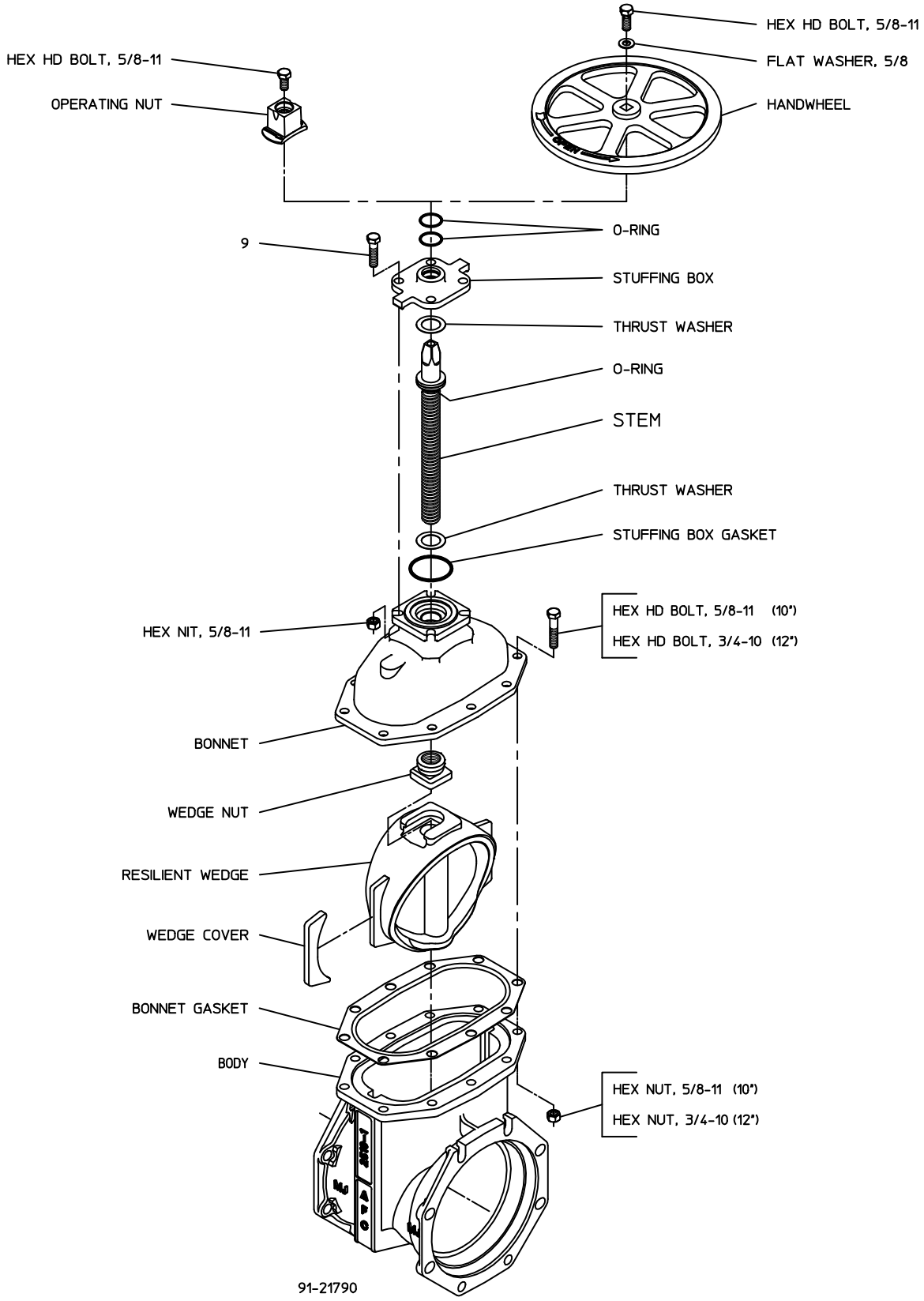

Disassembly

WARNING: Special care should be taken in the installation, inspection and repair of pressure containing devices such as valves and hydrants. FAILURE TO FOLLOW PROPER PRACTICE AND GUIDELINES CAN RESULT IN SERIOUS INJURY OR DEATH. Do not make repairs while valve is under pressure.

Disassembling Miter gearing

1. Remove bolts and nuts that attach gear housing cover.
2. Remove bolt that attaches miter gear to gear shaft. Slide shaft out of opening in the gear housing.
3. Remove bolt that attaches miter gear to valve stem and pull miter gear from stem.
4. Remove gear housing from valve.
5. Inspect O-rings and if damaged, remove from gear housing and stem. Replace with new O-rings and lubricate with an AMERICAN Flow Control recommended food grade grease.

Disassembling Valve

1. Back stem out of bonnet by turning in the closing direction.
2. Inspect O-rings and, if damaged, remove from gear housing and stem. Replace with new O-rings and lubricate with food grade grease.
3. Inspect thrust washers and stuffing box gasket (O-ring) and replace if damaged.
4. Remove bolts and nuts that attach bonnet to valve body. Remove bonnet to inspect bonnet gasket, wedge nut (4”—12”), wedge and interior of valve body. Replace parts if damaged.

Reassembly

Reassembly is the reverse of disassembly while paying attention to the following points.

1. Make sure wedge nut (4”—12”) is seated fully into slot in wedge.
2. Make sure the bonnet gasket is positioned correctly on the valve body flange when bonnet is assembled onto valve body.
3. Lubricate stem threads with an AMERICAN Flow Control recommended food grade grease before installing into bonnet and threading into wedge nut. Turn stem in opening direction.
4. Position stuffing box gasket in top of bonnet and slide gear housing onto stem being careful not to cut the stem seal O-rings.
5. Reinstall all bolts and nuts and tighten alternately to 70-90 ft-lb of torque.
6. Make sure the thrust washer is on the pilot of the miter gear when it is assembled onto the gear shaft. A dab of an AMERICAN Flow Control recommended food grade grease on the thrust washer will hold it on the gear.
7. The gear housing should be filled approximately half-full with food grade grease.

SERIES 2500 - NRS WITH ENCLOSED MITER GEARING REPAIRS
3”–12”

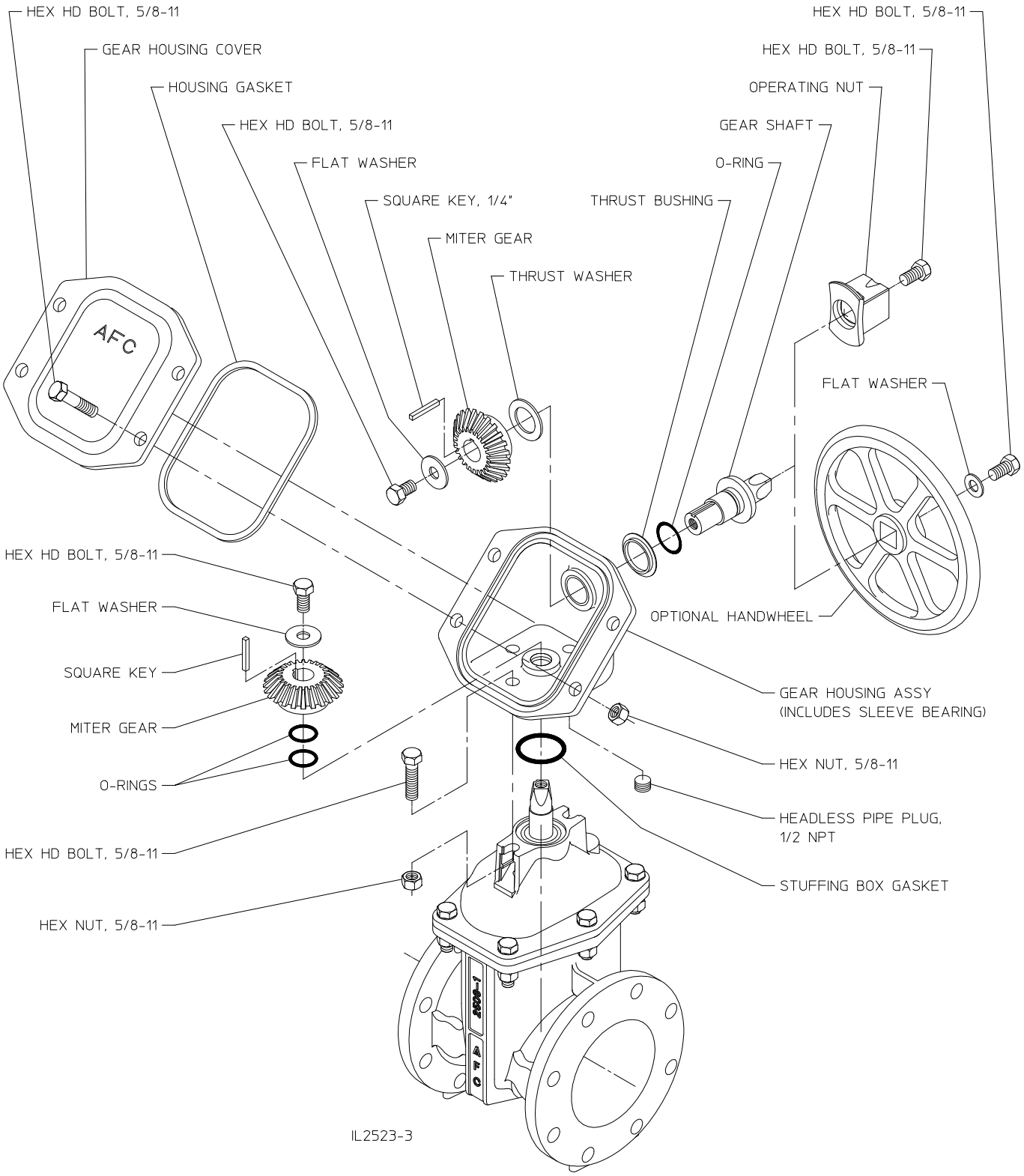

WARNING: Special care should be taken in the installation, inspection and repair of pressure containing devices such as valves and hydrants. FAILURE TO FOLLOW PROPER PRACTICE AND GUIDELINES CAN RESULT IN SERIOUS INJURY OR DEATH. Do not make repairs while valve is under pressure.

Disassembly

1. Turn the handwheel to fully close the valve.
2. Loosen the packing gland nuts and remove the 2 bolts fastening the bonnet to the valve body.
3. Turn the handwheel to raise the bonnet away from the valve body and unthread the stem assembly from the stem.
4. Pull the wedge and stem assembly out the valve throat.
5. Remove the packing gland nuts, gland, gland follower and packing rings if necessary.
6. Loosen and remove the handwheel nut and yoke nut to remove handwheel. Do not lose the square key.
7. Drive out the pin in the wedge and unscrew the stem from the wedge.

Reassembly

Reassembly is the reverse of disassembly with the following notes:

1. Carefully inspect and replace any damaged components. Lubricate all O-rings with an AMERICAN Flow Control recommended food grade grease.
2. Make sure the bonnet gasket is properly positioned on the valve body flange when the bonnet is assembled onto the valve body. Make sure the wedge nut is fully seated into the slot in the wedge.
3. Place the bonnet part-way onto the stem and insert the gland and gland-follower onto the stem. Raise the bonnet again and thread the yoke nut partially onto the stem.
4. Place the bonnet onto the lower yoke nut and turn the yoke nut and bonnet onto the stem until the bonnet contacts the throat gasket.
5. Using 2 hex head bolts, fasten the bonnet to the valve body.
6. Place the handwheel washer over the stem and onto the top of the yoke.
7. Slip the handwheel over the stem and onto the yoke nut. Insert the square key and replace the handwheel nut, tightening securely.
8. Raise the gland and gland-follower and replace the packing rings so that the joints in the rings are not aligned. Use the same number of packing rings as were removed.
9. Replace the gland-follower nuts and tighten only enough to prevent leakage of water past the stem.

SERIES 2500 - OS & Y REPAIRS, 2" SIZE

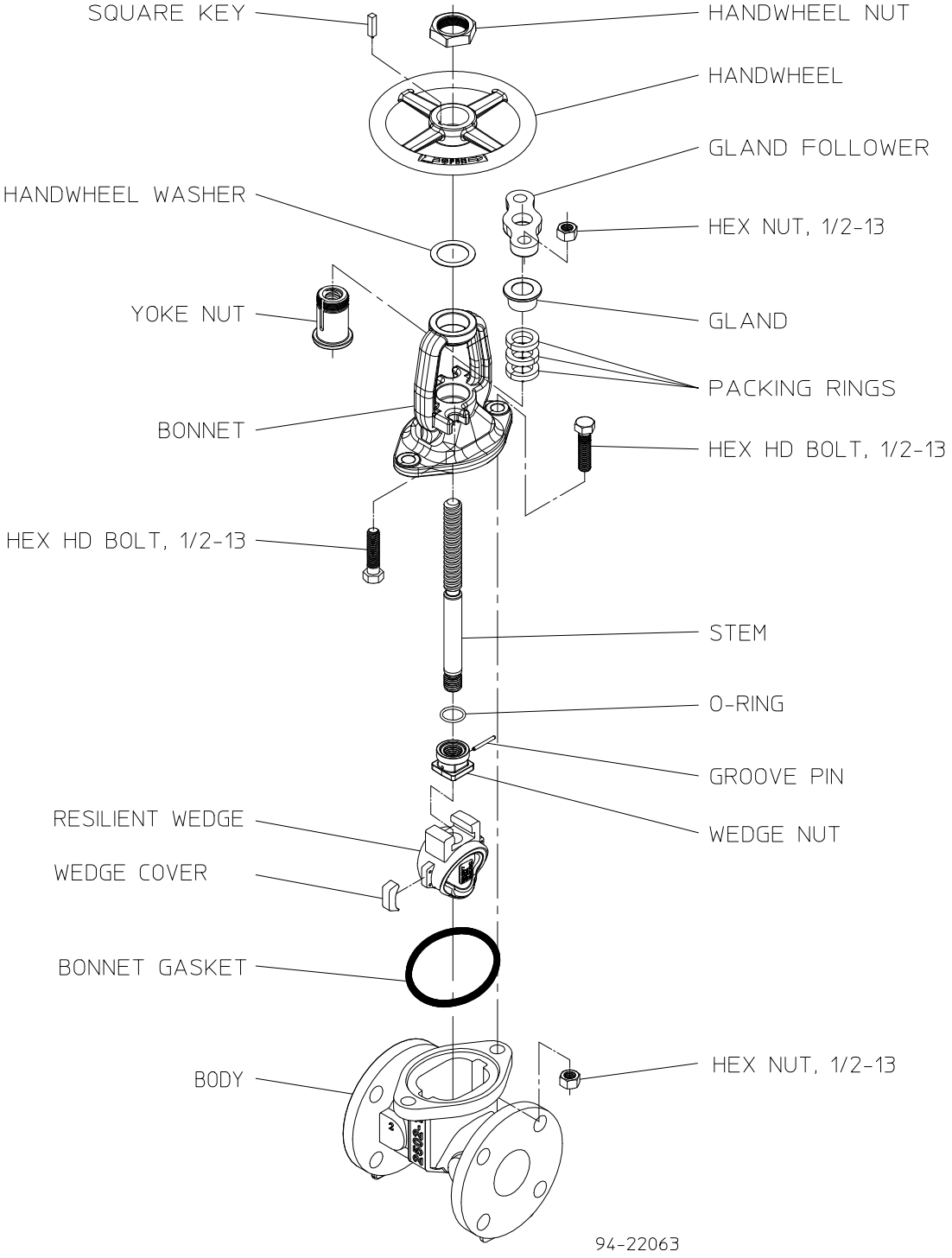

WARNING: Special care should be taken in the installation, inspection and repair of pressure containing devices such as valves and hydrants. FAILURE TO FOLLOW PROPER PRACTICE AND GUIDELINES CAN RESULT IN SERIOUS INJURY OR DEATH. Do not make repairs while valve is under pressure.

Disassembly

1. Turn the handwheel to fully close the valve.
2. Mark the 2 stem nuts in line with each other - one mark on the top of the upper stem nut and one mark on the same side of the lower stem nut flange.
3. Remove the 2 hex-head bolts from the bonnet.
4. Loosen the gland-follower nuts.
5. Turn the handwheel in the closing direction to unscrew the pair of stem nuts from the stem. The handwheel, bonnet and handwheel washer will also be removed as they are trapped between the stem nuts. When the upper stem nut is fully unthreaded from the stem, the handwheel can be removed. When the lower stem nut is unthreaded from the stem, the bonnet, gland and gland-follower can be removed.
6. Grasping the stem, withdraw the stem and wedge assembly from the valve.
7. Drive the groove pin out of the wedge and unscrew the stem from the wedge.

Reassembly

Reassembly is the reverse of disassembly with the following notes:

1. Carefully inspect and replace any damaged components. Lubricate all O-rings with an AMERICAN Flow Control recommended food grade grease.
2. Make sure the bonnet gasket is properly positioned on the valve body flange when the bonnet is assembled onto the valve body.
3. Place the bonnet part-way onto the stem tipping the top of the bonnet's yoke to the side. Raise the yoke off the top of the stem and place the gland and gland follower onto the stem. Raise the yoke again and thread the lower stem nut partially onto the stem. Note the position of the alignment mark and place the yoke onto the lower stem nut.
4. Place the handwheel washer on the top of the yoke.
5. Note the location of the alignment mark on the upper stem nut and place the nut in the handwheel. Place the handwheel and upper stem nut onto the yoke, engaging the teeth of the stem nuts so that the marks are aligned.
6. Turn the handwheel and yoke as a unit onto the stem until the yoke is nearly touching the bonnet.
7. Using 2 hex head bolts, fasten the bonnet to the valve body.
8. Raise the gland and gland-follower and replace the packing rings so that joints in the rings are not aligned. Use the same total number of packing rings as were removed.
9. Replace the gland-follower nuts and tighten only enough to prevent leakage of water past the stem.

SERIES 2500 - OS & Y REPAIRS, 2-1/2" & 3" SIZES

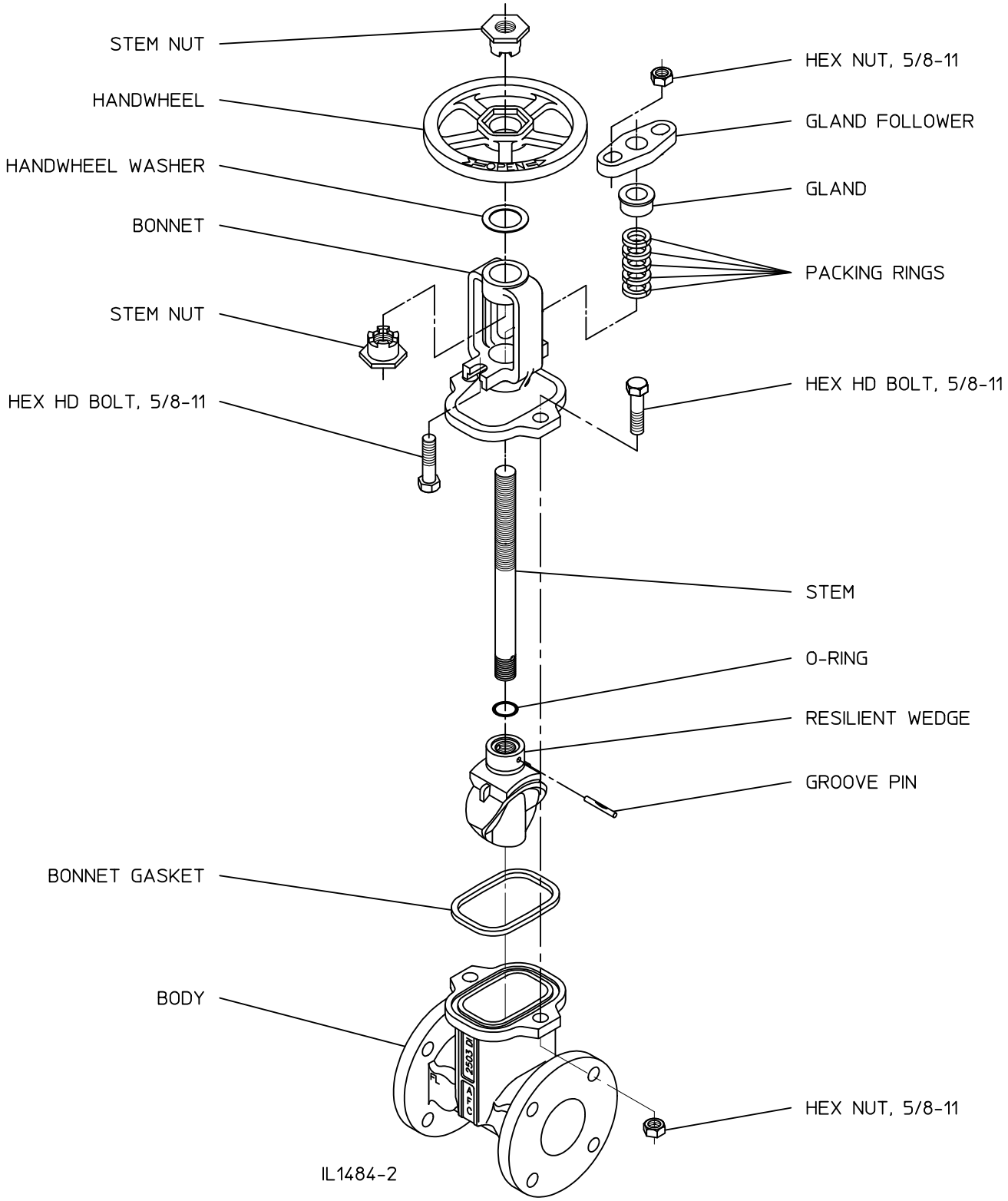

WARNING: Special care should be taken in the installation, inspection and repair of pressure containing devices such as valves and hydrants. FAILURE TO FOLLOW PROPER PRACTICE AND GUIDELINES CAN RESULT IN SERIOUS INJURY OR DEATH. Do not make repairs while valve is under pressure.

Disassembly

1. Turn the handwheel to fully close the valve.
2. Mark the 2 stem nuts in line with each other, one mark on the top of the upper stem nut and one mark on the same side of the lower stem nut flange.
3. Remove the 2 hex-head bolts from the yoke.
4. Loosen the gland-follower nuts.
5. Turn the handwheel in the closing direction to unscrew the pair of stem-nuts from the stem. The handwheel, yoke and handwheel washer will also be removed as they are trapped between the stem-nuts. When the upper stem nut is fully unthreaded from the stem, the handwheel can be removed. When the lower stem nut is unthreaded from the stem, the yoke, gland and gland follower can be removed.
6. Remove the bonnet bolts and grasping the stem, withdraw the bonnet and wedge assembly from the valve.
7. Withdraw the stem and wedge assembly from the bonnet and remove the wedge from the stem by sliding the wedge nut out the side of the wedge slot.
8. Drive the groove pin out of the wedge nut and unscrew the stem from the wedge nut.

Reassembly

Reassembly is the reverse of disassembly with the following notes:

1. Carefully inspect and replace any damaged components. Lubricate all O-rings with an AMERICAN Flow Control recommended food grade grease.
2. Make sure the wedge nut is fully seated into the slot in the wedge.
3. Make sure the bonnet gasket is properly positioned on the valve body flange when the bonnet is assembled onto the valve body.
4. After installing the wedge assembly and bonnet, place one packing ring in the bonnet then position the stuffing box gasket in the bonnet recess.
5. Place the yoke part-way onto the stem tipping the top of the yoke to the side. Raise the yoke off of the top of the stem and place the gland and gland-follower onto the stem. Raise the yoke again and thread the lower stem nut partially onto the stem. Note the position of the alignment mark and place the yoke onto the lower stem nut.
6. Place the handwheel washer on the top of the yoke.
7. Note the location of the alignment mark on the upper stem nut and place the nut in the handwheel. Place the handwheel and upper stem nut onto the yoke, engaging the teeth of the stem nuts so that the marks are aligned.
8. Turn the handwheel and yoke as a unit onto the stem until the yoke is nearly touching the bonnet.
9. Using 2 hex head bolts, fasten the yoke to the bonnet.
10. Raise the gland and gland-follower and replace the packing rings so that joints in the rings are not aligned. Use the same total number of packing rings as were removed.
11. Replace the gland-follower nuts and tighten only enough to prevent leakage of water past the stem.

SERIES 2500 - OS & Y REPAIRS, 4”–8” SIZES

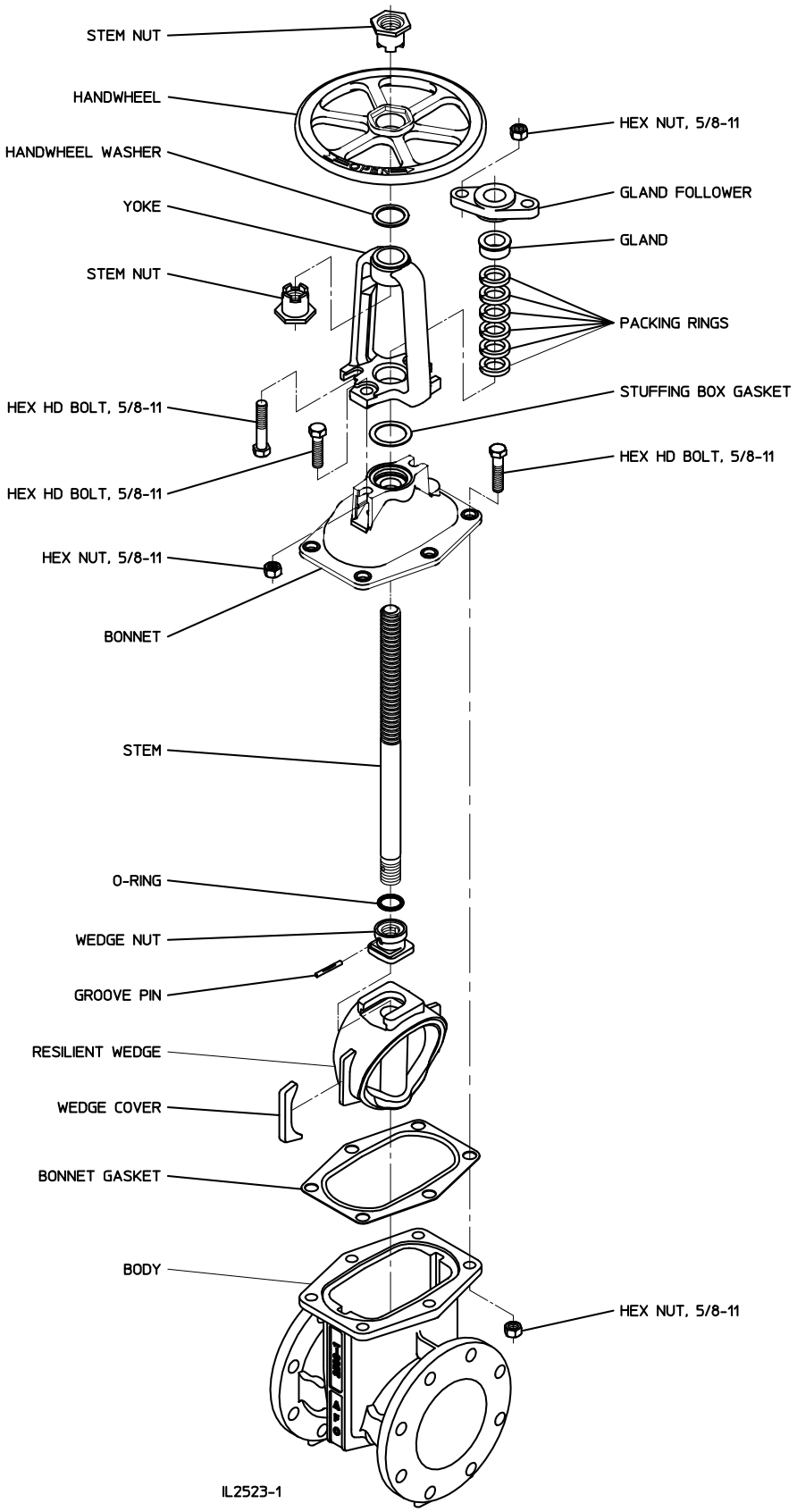

WARNING: Special care should be taken in the installation, inspection and repair of pressure containing devices such as valves and hydrants. FAILURE TO FOLLOW PROPER PRACTICE AND GUIDELINES CAN RESULT IN SERIOUS INJURY OR DEATH. Do not make repairs while valve is under pressure.

Disassembly

1. Turn the handwheel to fully close the valve.
2. Loosen the packing gland nuts and remove the 4 bolts fastening the yoke to the bonnet.
3. Turn the handwheel to raise the yoke away from the bonnet and unthread the assembly from the stem. Do not lose the square key.
4. Remove the bolts from the bonnet and lift the bonnet over and off of the stem.
5. Disengage the stem and wedge nut from the wedge by sliding the nut out of the slot in the wedge.
6. Drive out the pin in the wedge nut and unscrew the stem from the wedge nut.
7. Pull the wedge out of the valve throat.

Reassembly

Reassembly is the reverse of disassembly with the following notes:

1. Carefully inspect and replace any damaged components. Lubricate all O-rings with an AMERICAN Flow Control recommended food grade grease.
2. Make sure the wedge nut is fully seated into the slot in the wedge.
3. Make sure the bonnet gasket is properly positioned on the valve body flange when the bonnet is assembled onto the valve body.
4. After installing the stem, wedge assembly and bonnet, position the stuffing box gasket in the bonnet recess.
5. Place the yoke part-way onto the stem tipping the top of the yoke to the side. Raise the yoke off the top of the stem and place the gland and gland follower onto the stem. Raise the yoke again and thread the yoke nut partially onto the stem. Place the yoke onto the yoke nut.
6. Turn the yoke nut and yoke onto the stem until the yoke contacts the bonnet.
7. Using 4 hex head bolts, fasten the yoke to the bonnet.
8. Place the handwheel washer over the stem and onto the top of the yoke.
9. Slip the handwheel over the stem and onto the yoke nut. Insert the square key and replace the handwheel nut, tightening securely.
10. Raise the gland and gland-follower and replace the packing rings so that joints in the rings are not aligned. Use the same number of packing rings as were removed.
11. Replace the gland-follower nuts and tighten only enough to prevent leakage of water past the stem.

SERIES 2500 - OS & Y REPAIRS, 10”–24” SIZES

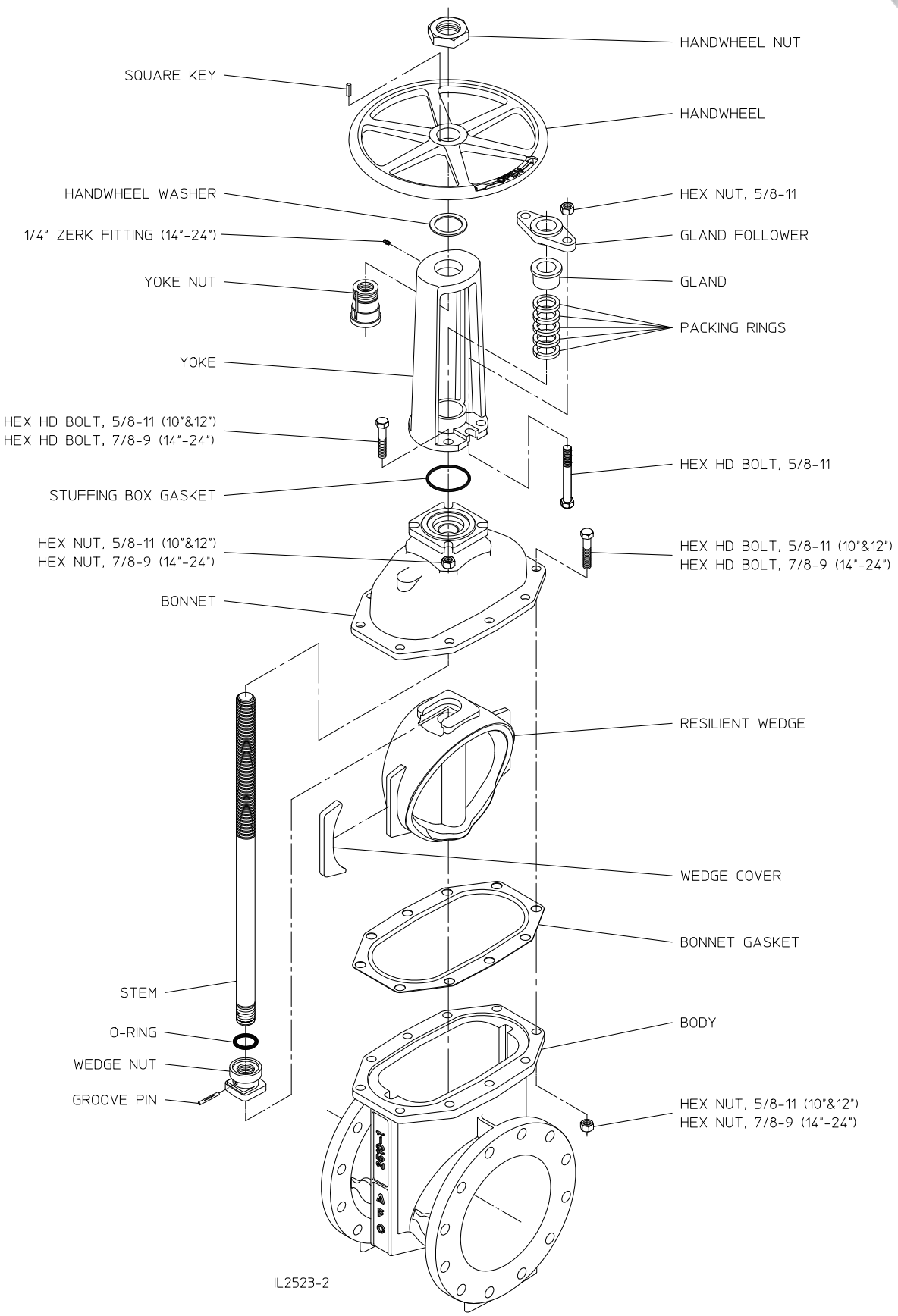

Valves 2 in.—66in. shall be resilient wedge type rated for 250 psig cold water working pressure. All ferrous components shall be ductile iron. All NRS valves, in applicable configurations, 2-1/2in.—24in. in diameter shall be Listed by Underwriters Laboratories, Inc. All OS&Y valves in applicable configurations, 3in.—24in. in diameter shall be Listed by Underwriters Laboratories, Inc. Valves 3 in—54 in. shall be in full compliance with ANSI/AWWA C515. The words “DI" or “Ductile Iron" shall be cast on the valve. The wedge shall be ductile iron encapsulated with EPDM rubber and provided with male type guides and polymer guide covers. Bolting shall be Type 304 stainless steel and shall be provided with hexagonal heads with dimensions conforming to ANSI B18.2.1. Metric size, socket head cap screws therefore are not allowed.

- Operating nut shall be constructed of ductile iron and shall have four flats at stem connection to assure even input torque to the stem.
- All gaskets shall be pressure energized O-rings.
- Stem shall be sealed by three O-rings. The top two O-rings shall be replaceable with valve fully open and while subject to full rated working pressure. O-rings set in a cartridge shall not be allowed.
- Valve shall have thrust washers located with (1) above and (1) below the thrust collar to assure trouble-free operation of the valve.
- All internal and external surfaces of the valve body and bonnet shall have a fusion-bonded epoxy coating, complying with ANSI/AWWA C550, applied electrostatically prior to assembly.
- Valves shall be certified to NSF/ANSI Standard 61 and NSF/ANSI 372.
- Valves shall be AMERICAN Flow Control's **Series 2500 or 2500-1 Resilient Wedge Gate Valve.**

AMERICAN Flow Control

SECTION 4

INDICATOR POST

IP-71 Indicator Post	FOR REFERENCE ONLY	4A-1 through 4A-11
IP16 Indicator Post		4B-1 through 4B-12

AMERICAN

FLOW CONTROL

THE RIGHT WAY

FOR REFERENCE ONLY

INDEX

IP-71 INDICATOR POST

PAGE

INTRODUCTION 4A-2
ORDERING
Dimensions:
Indicator Post 4A-3
Model Number and Trench Depth 4A-4
Valve with Indicator Plate 4A-5
Weights 4A-6
Submittal Sheet 4A-7

INSTALLATION 4A-8

OPERATION AND MAINTENANCE A-9

REPAIRS
Parts List:
Indicator Post A-10
Valve with Indicator Plate 4A-11

FOR REFERENCE ONLY

IP-71 INDICATOR POST

AMERICAN Flow Control offers a full line of “open-shut” indicator posts that are Approved by FM Approvals and UL Listed with 3 in.-18 in. gate valves.

Indicator posts are used to operate and indicate open/shut status of buried gate valves. They are recommended for use in fire protection systems or installations where it is critical that valve status be known.

FOR REFERENCE ONLY

IP-71 DIMENSIONS

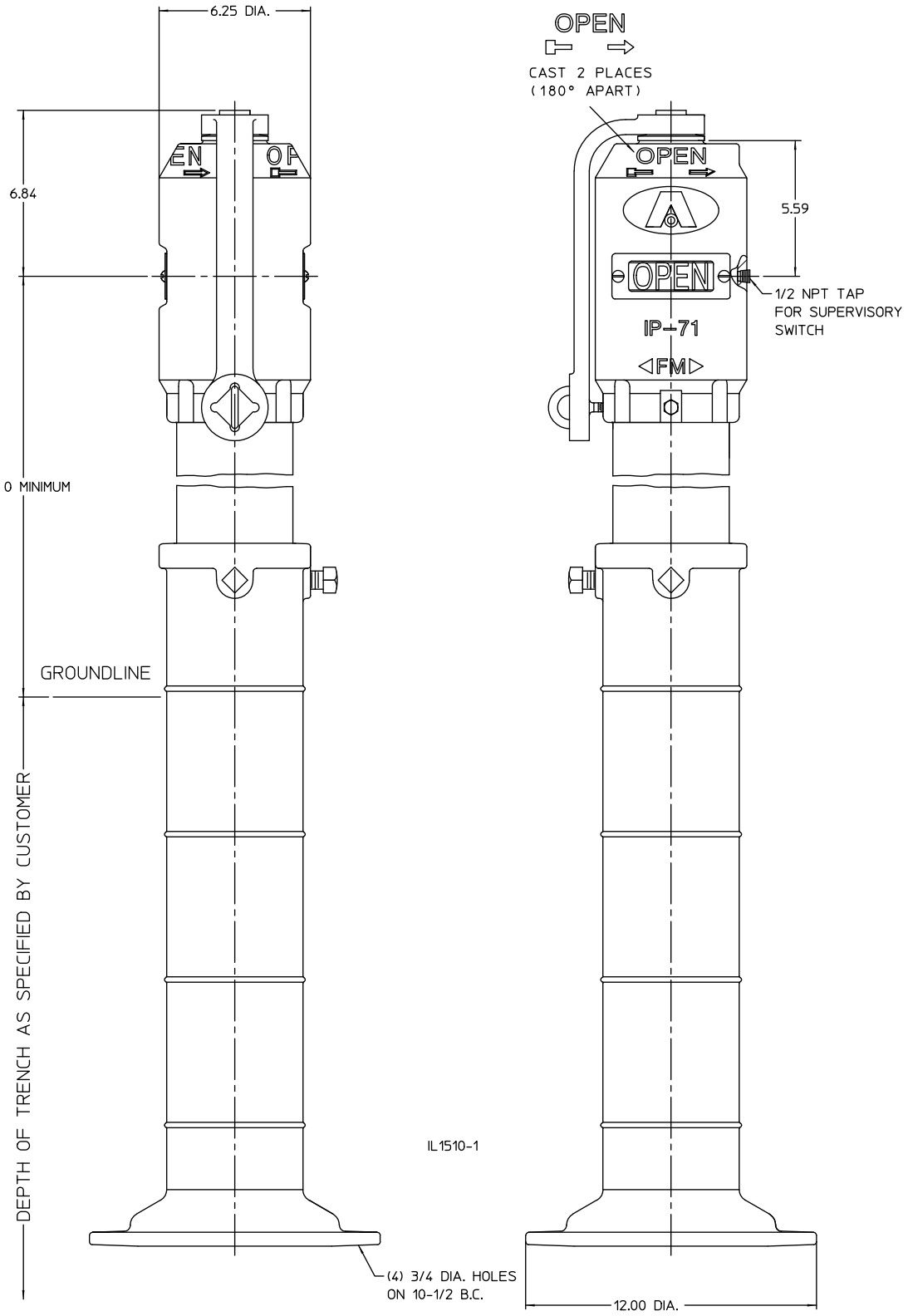

NOTE:
UL Listed and Approved by FM Approvals.

FOR REFERENCE ONLY

IP-71 DIMENSIONS

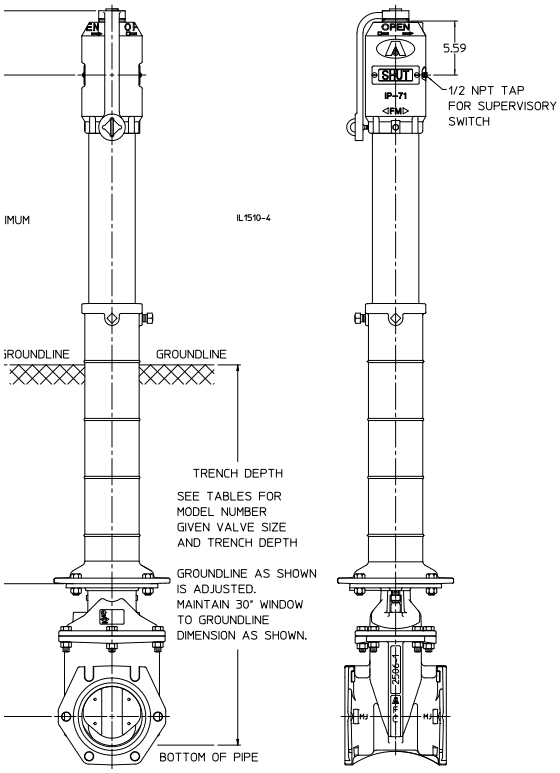

Note: Trench depths are detailed in traditional 6-inch increments. For trench depths that may fall between those referenced, the installer may choose to use the next available model.

Model Number	Valve Size		
	3” & 4”	6”	8”
	Trench Depth	Trench Depth	Trench Depth
1A	2’0” - 3’0”	2’0” - 3’6”	2’6” - 4’0”
2A	3’6” - 5’0”	4’0” - 5’6”	4’6” - 6’0”
3A	5’6” - 7’0”	6’0” - 7’6”	6’6” - 8’0”
4A	7’6” - 9’0”	8’0” - 9’6”	8’6” - 10’0”
5A	9’6” - 11’0”	10’0” - 11’6”	10’6” - 12’0”
6A	11’6” - 13’0”	12’0” - 13’6”	12’6” - 14’0”
7A	13’6” - 15’0”	14’0” - 15’6”	14’6” - 16’0”
8A	15’6” - 17’0”	16’0” - 17’6”	16’6” - 18’0”

Model Number	Valve Size	
	10”	12”
	Trench Depth	Trench Depth
1B	3’0” - 4’6”	3’6” - 4’6”
2B	5’0” - 6’6”	5’0” - 6’6”
3B	7’0” - 8’6”	7’0” - 8’6”
4B	9’0” - 10’6”	9’0” - 10’6”
5B	11’0” - 12’6”	11’0” - 12’6”
6B	13’0” - 14’6”	13’0” - 14’6”
7B	15’0” - 16’6”	15’0” - 16’6”
8B	17’0” - 18’6”	17’0” - 18’6”

Model Number	Valve Size		
	14”	16”	18”
	Trench Depth	Trench Depth	Trench Depth
1B	4’0” - 5’0”	4’6” - 5’6”	4’6” - 6’0”
2B	5’6” - 7’0”	6’0” - 7’6”	6’6” - 8’0”
3B	7’6” - 9’0”	8’0” - 9’6”	8’6” - 10’0”
4B	9’6” - 11’0”	10’0” - 11’6”	10’6” - 12’0”
5B	11’6” - 13’0”	12’0” - 13’6”	12’6” - 14’0”
6B	13’6” - 15’0”	14’0” - 15’6”	14’6” - 16’0”
7B	15’6” - 17’0”	16’0” - 17’6”	16’6” - 18’0”
8B	17’6” - 19’0”	18’0” - 19’6”	18’6” - 20’0”

Model Number	Valve Size	
	20”	24”
	Trench Depth	Trench Depth
1C	5’0” - 6’6”	6’0” - 7’0”
2C	7’0” - 8’6”	7’6” - 9’0”
3C	9’0” - 10’6”	9’6” - 11’0”
4C	11-0” - 12’6”	11’6” - 13’0”
5C	13’0” - 14’6”	13’6” - 15’0”
6C	15’0” - 16’6”	15’6” - 17’0”
7C	17’0” - 18’6”	17’6” - 19’0”
8C	19’0” - 20’6”	19’6” - 21’0”

Dimension	Valve Size										
	Series 2500	Series 2500-1					Series 2500				
	3”	4”	6”	8”	10”	12”	14”	16”	18”	20”	24”
A	8.97	10.38	13.75	16.94	20.34	23.78	29.25	32.75	35.62	39.69	47.84

FOR REFERENCE ONLY

IP-71 DIMENSIONS

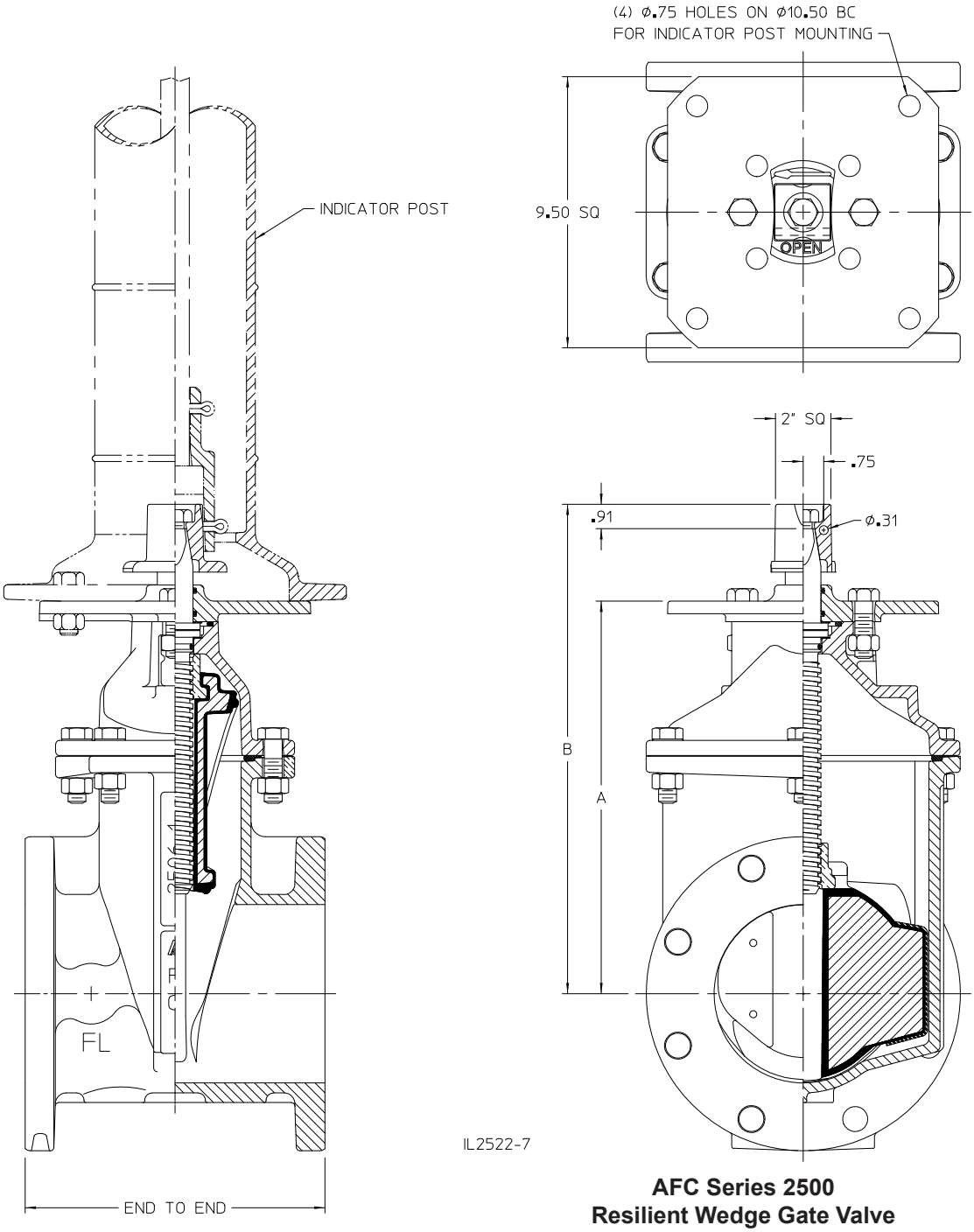

AFC Series 2500
Resilient Wedge Gate Valve

Dimension	Valve Size										
	Series 2500	Series 2500-1				Series 2500					
	3”	4”	6”	8”	10”	12”	14”	16”	18”	20”	24”
A	8.97	10.38	13.75	16.94	20.34	23.78	29.25	32.75	35.62	39.69	47.84
B	11.84	13.91	17.12	20.47	24.06	27.59	33.25	36.75	39.62	43.25	51.25
End to end - FL x FL (Class 125)	8.00	9.00	10.50	11.50	13.00	14.00	15.0	16.00	17.00	18.00	20.00
End to End - MJ x MJ	8.62	10.00	10.50	11.50	12.50	13.50	20.50	20.88	23.00	23.50	25.50

FOR REFERENCE ONLY

IP-71 WEIGHTS

Model Number	Weight
1A, 1B & 1C	146 LBS
2A, 2B & 2C	178 LBS
3A, 3B & 3C	211 LBS
4A, 4B & 4C	244 LBS
5A, 5B & 5C	277 LBS
6A, 6B & 6C	310 LBS
7A, 7B & 7C	344 LBS
8A, 8B & 8C	375 LBS

FOR REFERENCE ONLY

AMERICAN Flow Control®
IP-71 (UNDERGROUND) INDICATOR POST

SUBMITTAL SHEET

Quantity:	
Direction to Open:	☐ Left (CCW) ☐ Right (CW)
Valve Size Post Used On:	☐ 3” ☐ 4” ☐ 6” ☐ 8” ☐ 10” ☐ 12” ☐ 14” ☐ 16” ☐ 18” ☐ 20” ☐ 24”
Model Number:	
Other Requirements (List):	

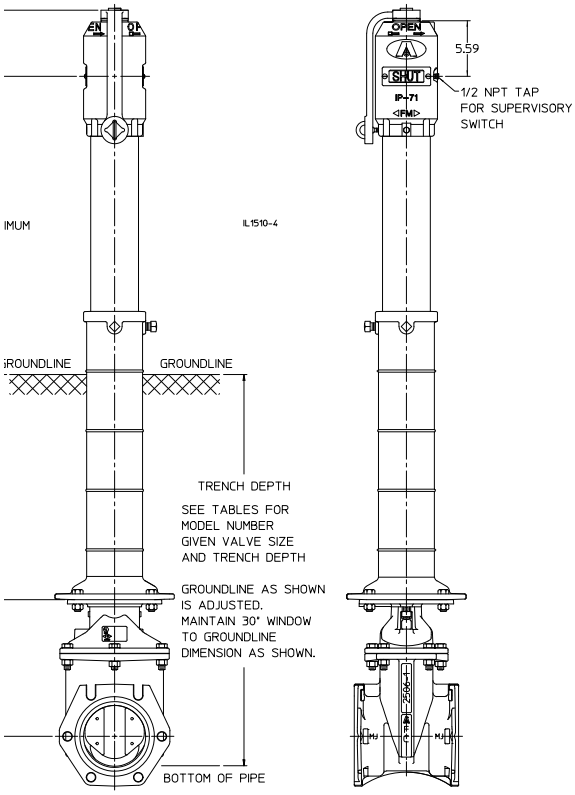

Model Number	Valve Size		
	3” & 4”	6”	8”
	Trench Depth	Trench Depth	Trench Depth
1A	2’0” - 3’0”	2’0” - 3’6”	2’6” - 4’0”
2A	3’6” - 5’0”	4’0” - 5’6”	4’6” - 6’0”
3A	5’6” - 7’0”	6’0” - 7’6”	6’6” - 8’0”
4A	7’6” - 9’0”	8’0” - 9’6”	8’6” - 10’0”
5A	9’6” - 11’0”	10’0” - 11’6”	10’6” - 12’0”
6A	11’6” - 13’0”	12’0” - 13’6”	12’6” - 14’0”
7A	13’6” - 15’0”	14’0” - 15’6”	14’6” - 16’0”
8A	15’6” - 17’0”	16’0” - 17’6”	16’6” - 18’0”

Model Number	Valve Size	
	10”	12”
	Trench Depth	Trench Depth
1B	3’0” - 4’6”	3’6” - 4’6”
2B	5’0” - 6’6”	5’0” - 6’6”
3B	7’0” - 8’6”	7’0” - 8’6”
4B	9’0” - 10’6”	9’0” - 10’6”
5B	11’0” - 12’6”	11’0” - 12’6”
6B	13’0” - 14’6”	13’0” - 14’6”
7B	15’0” - 16’6”	15’0” - 16’6”
8B	17’0” - 18’6”	17’0” - 18’6”

Model Number	Valve Size		
	14”	16”	18”
	Trench Depth	Trench Depth	Trench Depth
1B	4’0” - 5’0”	4’6” - 5’6”	4’6” - 6’0”
2B	5’6” - 7’0”	6’0” - 7’6”	6’6” - 8’0”
3B	7’6” - 9’0”	8’0” - 9’6”	8’6” - 10’0”
4B	9’6” - 11’0”	10’0” - 11’6”	10’6” - 12’0”
5B	11’6” - 13’0”	12’0” - 13’6”	12’6” - 14’0”
6B	13’6” - 15’0”	14’0” - 15’6”	14’6” - 16’0”
7B	15’6” - 17’0”	16’0” - 17’6”	16’6” - 18’0”
8B	17’6” - 19’0”	18’0” - 19’6”	18’6” - 20’0”

Model Number	Valve Size	
	20”	24”
	Trench Depth	Trench Depth
1C	5’0” - 6’6”	6’0” - 7’0”
2C	7’0” - 8’6”	7’6” - 9’0”
3C	9’0” - 10’6”	9’6” - 11’0”
4C	11-0” - 12’6”	11’6” - 13’0”
5C	13’0” - 14’6”	13’6” - 15’0”
6C	15’0” - 16’6”	15’6” - 17’0”
7C	17’0” - 18’6”	17’6” - 19’0”
8C	19’0” - 20’6”	19’6” - 21’0”

Note: Trench depths are detailed in traditional 6-inch increments. For trench depths that may fall between those referenced, the installer may choose to use the next available model.

Dimension	Valve Size										
	Series 2500	Series 2500-1					Series 2500				
	3”	4”	6”	8”	10”	12”	14”	16”	18”	20”	24”
A	8.97	10.38	13.75	16.94	20.34	23.78	29.25	32.75	35.62	39.69	47.84

Visit our website at http://american-usa.com/afc

Approved by Factory Mutual Approvals and UL Listed to UL-789

FOR REFERENCE ONLY

IP-71 INSTALLATION

NOTE: The position of the indicator post target must coincide with the position of the valve. Failure to coodinate these positions can result in an inaccurate position indication or render the target inoperable.

Installation

1. **The IP-71 Indicator Post is shipped with the "OPEN" and "SHUT" targets in the mid position so that neither target is centered in the window. Do not change this position until the post is mounted on the valve.**
2. **The valve must be positioned so the gate is exactly half way between the full open and full closed positions**. For the AFC valve, use the following procedure:
   a. Open the valve to the full open position.
   b. Turn the valve in the closing direction as follows:

To Position Valve in 1/2-Open Position	
Valve Size	**Turns Toward Closed**
3"	6-1/2
4"	7
6"	10
8"	13
10"	16
12"	19
14"	22
16"	25
18"	28
20"	31
24"	38

3. Slide the indicator post rod out of the IP-71 post through the base.
4. Adjust the IP-71 barrel and base for the proper trench depth.
5. Lay the rod beside the properly adjusted IP-71 post with the bottom of the rod coupling even with the bottom of the flange on the base.
6. Cut the upper end of the rod even with the top of the target window.
7. Re-insert the rod, cut to the proper length back into the IP-71 post, making sure the square rod is inserted into the square recess in the operating nut.
8. Attach the wrench nut coupling on the IP-71 stem to the 2 in. wrench nut on the gate valve using the cotter pin provided.
9. Mount the IP-71 Indicator Post on the post flange on the gate valve.
10. Operate the gate valve to the full-open and full-closed positions to make sure the "OPEN" and "SHUT" signs are shown in the windows of the indicator post.

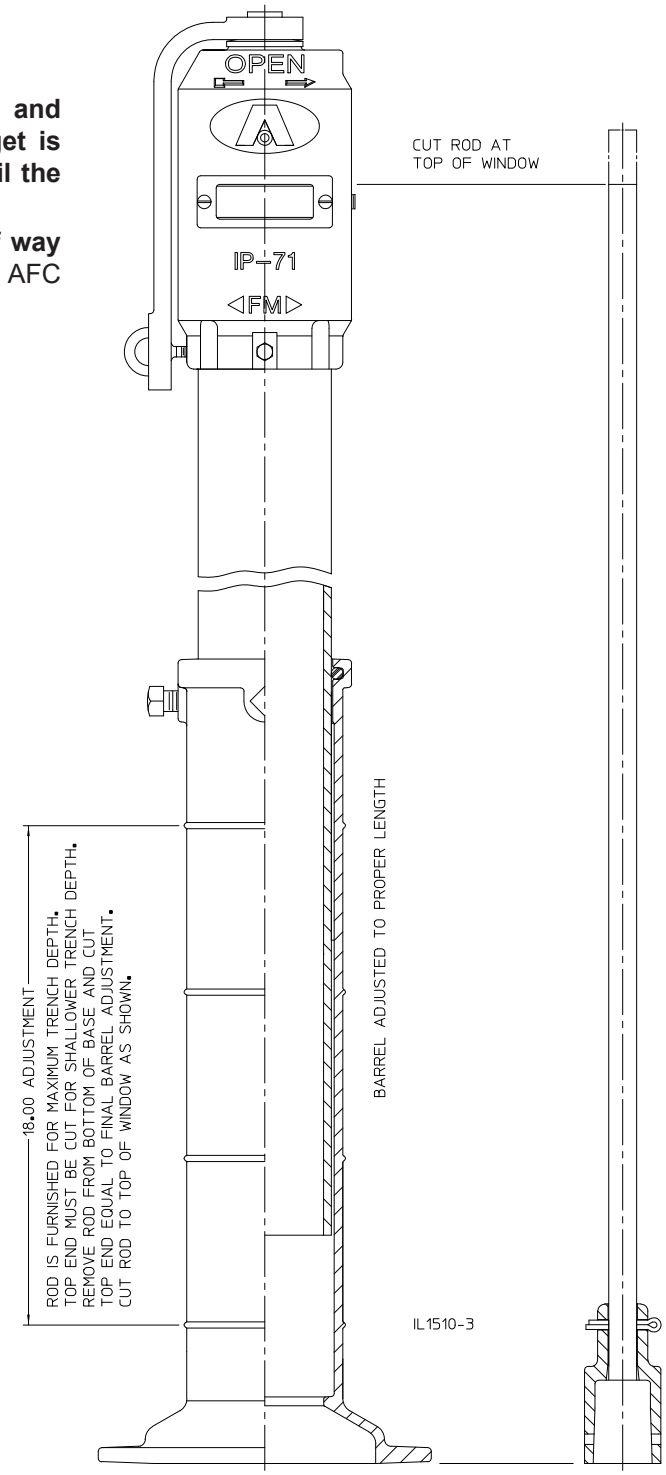

FOR REFERENCE ONLY

IP-71 OPERATION AND MAINTENANCE

Operation

1. Direction of opening is indicated by an arrow cast on to part of the indicator post body.
2. Using the wrench supplied with the indicator post fully open and close valve before applying system line pressure. Longer wrenches or “cheaters” should not be used. Excessive leverage may damage the indicator post or the gate valve to which it is connected.
3. AMERICAN recommends the use of AMERICAN Flow Control Series 2500 gate valves with the IP-71 indicator post. Please refer to Section 3A of the AMERICAN Valve and Hydrant Manual for Series 2500 gate valve operating instructions. In cases, where other valve manufactures are used, please contact that Manufacturer for specific valve operating instructions. AMERICAN will not be responsible for claims, errors or omissions in documentation provided by other manufacturers.

Maintenance

1. Inspect indicator post a minimum of four times per year, or more if conditions warrant. During inspection, place 3-4 drops of lubricating oil in hole located on top of the operating stem nut (IP-1). Turn operating stem nut to distribute oil.
2. If for any reason it becomes necessary to replace the operating stem nut (IP-1), proceed in the following manner:
   c. Remove eye bolt (IP-3) and hex head bolt (IP-9) and lift off entire indicator post head.
   d. Turn operating stem nut (IP-1) in closing direction until target carrier becomes disengaged.
   e. Remove TRUARC retaining ring (IP-4), using a pair of TRUARC pliers, external type.
   f. Lift operating stem nut out of body.
   g. To install operating stem nut, reverse above procedure.

   NOTE: Please refer to Section 3A of the AMERICAN Valve and Hydrant Manual for AMERICAN Series 2500 gate valve maintenance instructions. For all other valve manufacturers, please be sure to refer to that specific manufacturer’s instructions. AMERICAN will not be responsible for claims, errors or omissions in documentation provided by other manufacturers.

FOR REFERENCE ONLY

IP-71 PARTS LIST

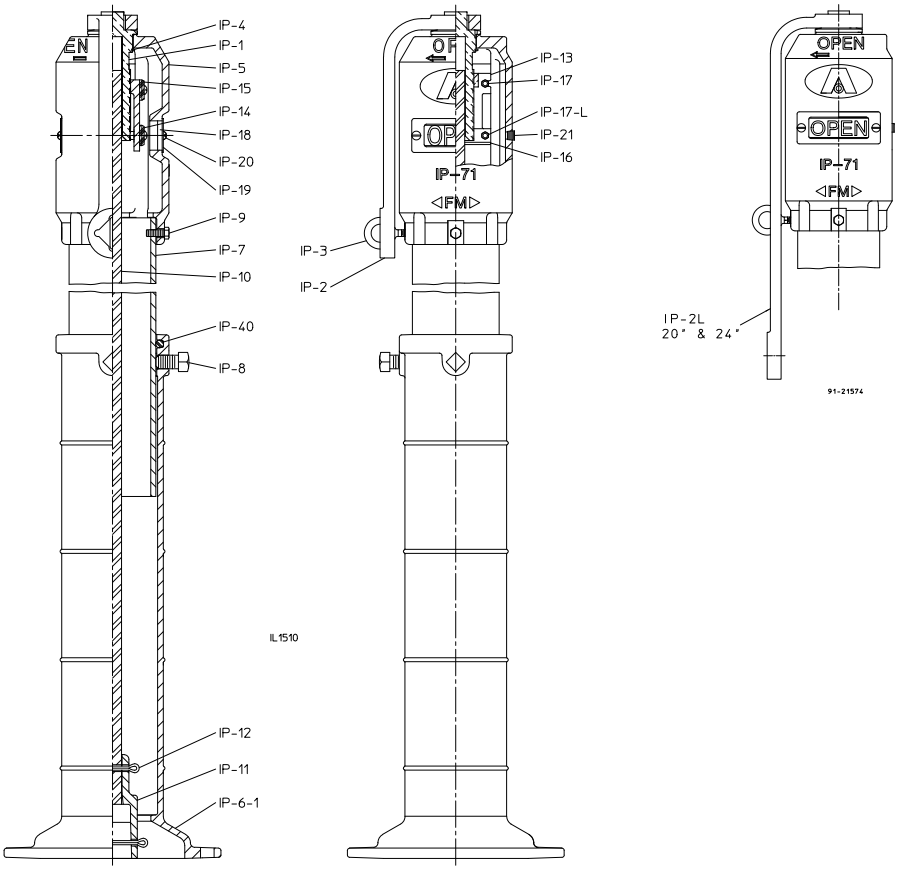

Ref No.	Description	Material	Quantity
IP-1	Operating Stem Nut	Bronze	1
IP-2	Orerating Wrench	Gray Iron	1
IP-2L	Operating Wrench	Gray Iron	1
IP-3	Eye Bolt	Steel	1
IP-4	Retaining Ring	Steel	1
IP-5	Body	Gray Iron	1
IP-6-1	Base	Ductile Iron	1
IP-7	Extension Barrel	Ductile Iron	1
IP-8	Set Screw	Steel	2
IP-9	Hex Head Bolt	Plated Steel	1
IP-10	Extension Rod	Steel	1
IP-11	Coupling	Gray Iron	1
IP-12	Cotter Pin	Steel	2
IP-13	Target Carrier	Bronze	1
IP-14	Target Plate - Open	Aluminum	2
IP-15	Target Plate - Shut	Aluminum	2
IP-16	Target Clamp	Stainless Steel	2
IP-17	Target Screw and Nut	Alumunum	7
IP-17-L	Target Screw and Nut	Aluminum	1
IP-18	Window	Glass	2
IP-19	Ferrule	Stainless Steel	2
IP-20	Ferrule Screw	Stainless Steel	4
IP-21	Pipe Plug	Steel	1
IP-40	O-ring	Rubber	1

NOTE: When ordering repair parts, please specify valve size, depth of trench and open direction.

FOR REFERENCE ONLY

IP-71 PARTS LIST

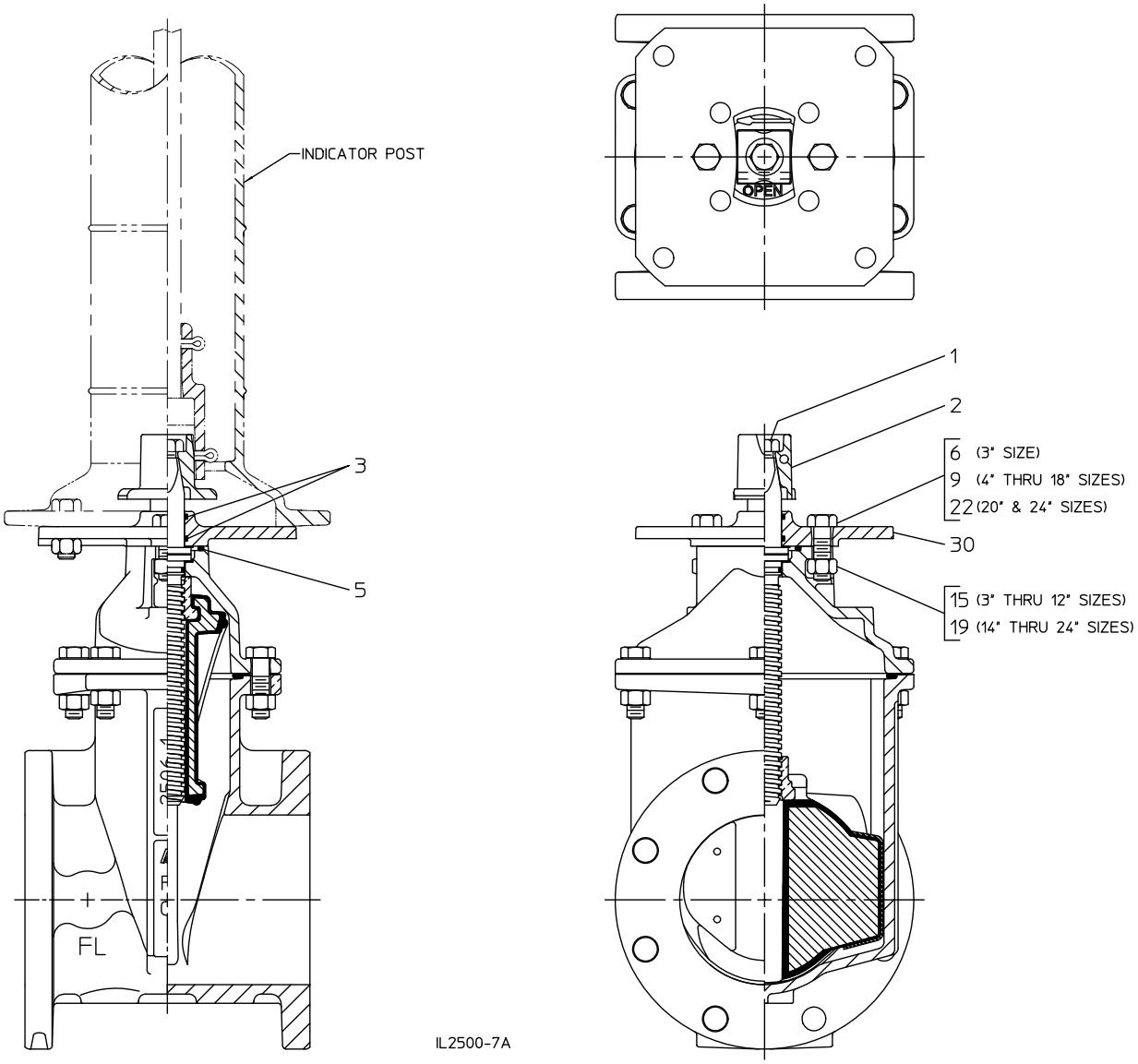

Ref No.	Description	Material	Quantity										
			Series 2500	Series 2500-1					Series 2500				
			3"	4"	6"	8"	10"	12"	14"	16"	18"	20"	24"
1	Hex Hd Bolt, 5/8-11 x 1"	Stainless Steel	1	1	1	1	1	1	-	-	-	-	-
1	Hex Hd Bolt, 5/8-11 x 1-3/4"	Stainless Steel	-	-	-	-	-	-	1	1	1	1	1
2	Operating Nut, 2" Sq.	Ductile Iron	1	1	1	1	1	1	1	1	1	1	1
3	O-ring	Rubber	2	2	2	2	2	2	2	2	2	2	2
5	Stuffing Box Gasket	Rubber O-ring	1	1	1	1	1	1	1	1	1	2	2
6	Hex Hd Bolt, 5/8-11 x 1-3/4"	Stainless Steel	2	-	-	-	-	-	-	-	-	-	-
9	Hex Hd Bolt, 5/8-11 x 2"	Stainless Steel	-	2	2	2	4	4	-	-	-	-	-
9	Hex Hd Bolt, 7/8-9 x 3"	Stainless Steel	-	-	-	-	-	-	4	4	4	-	-
15	Hex Nut, 5/8-11	Stainless Steel	2	2	2	2	4	4	-	-	-	-	-
19	Hex Nut, 7/8-9	Stainless Steel	-	-	-	-	-	-	4	4	4	4	4
22	Stud, 7/8-11 x 3-1/2	Stainless Steel	-	-	-	-	-	-	-	-	-	4	4
30	Indicator Plate	Ductile Iron	1	1	1	1	1	1	1	1	1	1	1

INDEX

IP16 INDICATOR POST

PAGE

INTRODUCTION 4B-2

ORDERING

Dimensions:

Indicator Post 4B-3

Model and Trench Depth 4B-4

Valve with Indicator Plate 4B-5

Weights 4B-6

Submittal Sheet 4B-7

INSTALLATION 4B-8

OPERATION AND MAINTENANCE 4B-9

REPAIRS

Parts List:

Indicator Post 4B-10

Valve with Indicator Plate 4B-11

IP16 INDICATOR POST

AMERICAN Flow Control offers a full line of vertical, adjustable indicator posts that are Listed by UL LLC and Approved by FM Approvals for used with 3 through 24-inch sizes of buried gate valves. Vertical inidcator posts are used to open and close gate valves used to control the flow of water to the fire protection systems such as automatic fire sprinkles, water or water and foam deluge systems, and standpipe fire hose connections. Indicator posts provide a visual indication of whether a valve is open or closed by the appearance of a traveling sign that displays “OPEN” or “SHUT” in a window on both sides of the post. Indicator posts also provide a means to lock a valve in the open position, and allow the mounting of an electrical supervisory switch for remotely monitoring the position of the gate valve.

IP16 DIMENSIONS

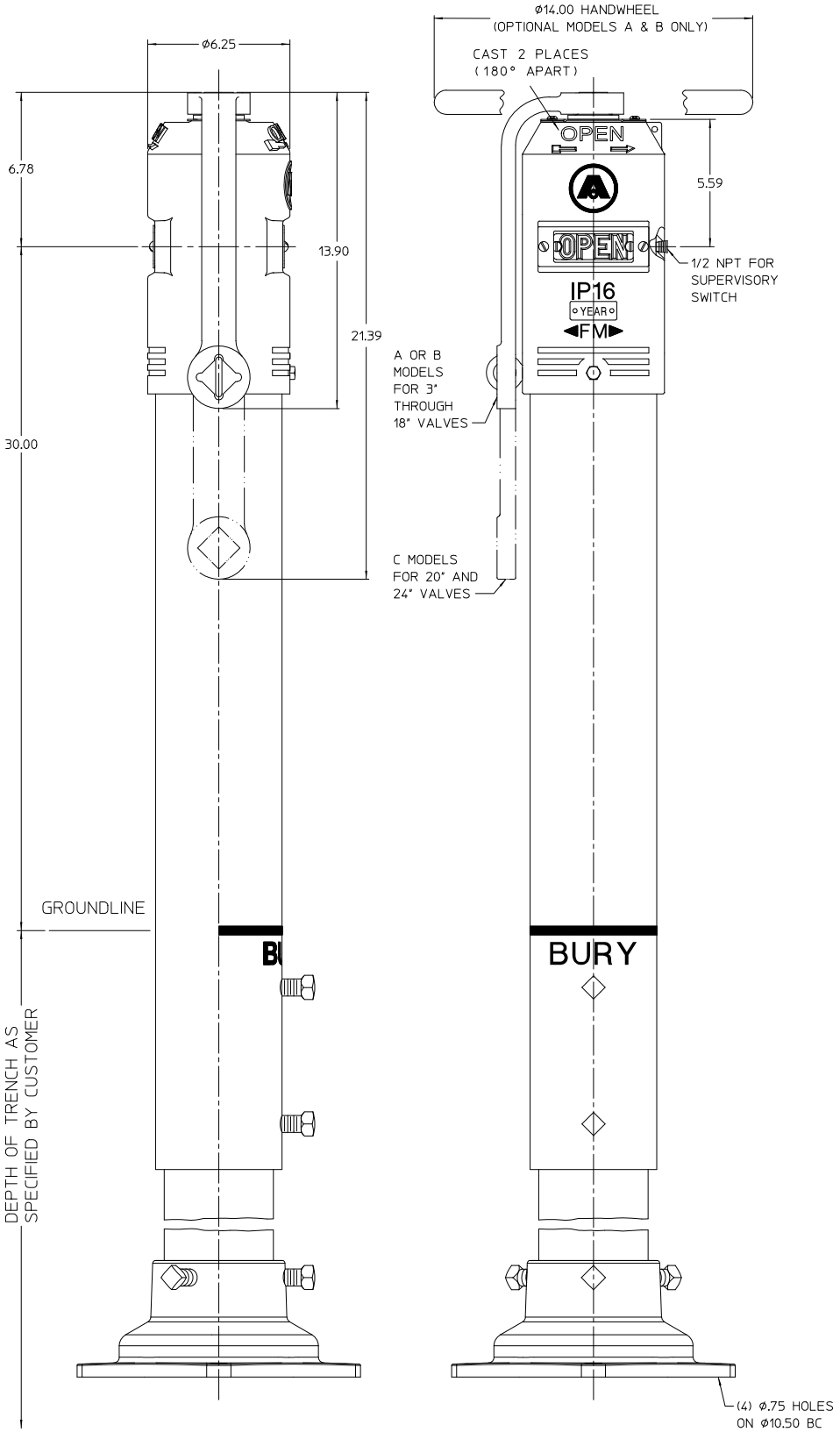

NOTE:
UL Listed and FM Approved.

IP16 DIMENSIONS

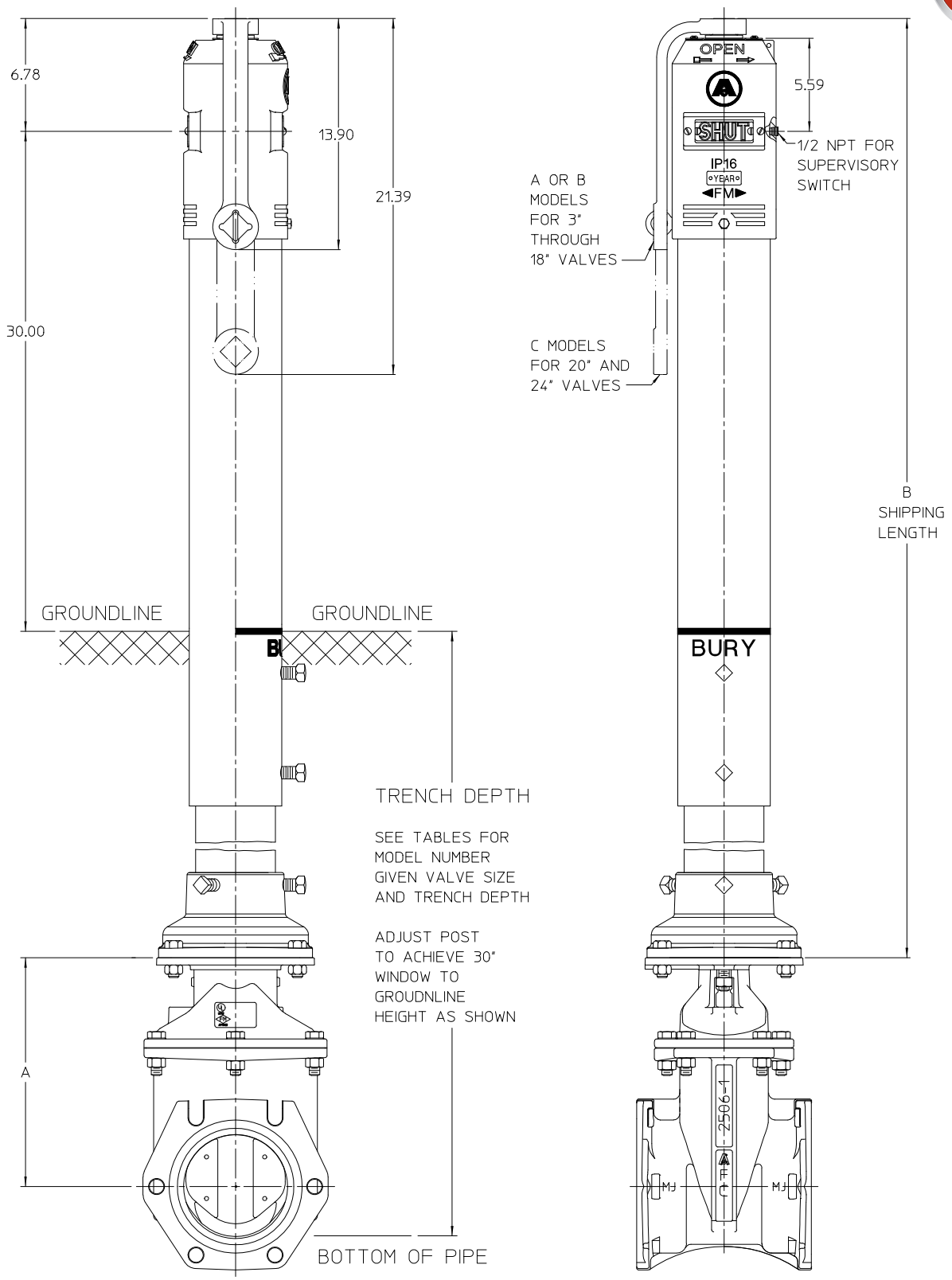

IP16 WEIGHTS AND SHIPPING LENGTHS

Model	Weight with Ductile Iron Lower Barrel	Weight with Steel Lower Barrel	Dimension B Shipping Length
1	144 lbs	143 lbs	52.45”
2	187 lbs	186 lbs	72.50”
3	214 lbs	213 lbs	100.43”
4	243 lbs	242 lbs	124.43”
5	272 lbs	270 lbs	148.43”
6	300 lbs	298 lbs	172.43”
7	329 lbs	327 lbs	196.43”
8	357 lbs	355 lbs	220.43”

IP16 DIMENSIONS

Model	Valve Size					
	3”	4”	6”	8”	10”	12”
	Trench Depth	Trench Depth	Trench Depth	Trench Depth	Trench Depth	Trench Depth
1A	2’1” - 4’1”	2’4” - 4’4”	2’8” - 4’8”	3’0” - 5’0”	3’5” - 5’5”	3’10” - 5’10”
2A	4’1” - 6’1”	4’4” - 6’4”	4’8” - 6’8”	5’0” - 7’0”	5’5” - 7’5”	5’10” - 7’10”
3A	6’1” - 8’1”	6’4” - 8’4”	6’8” - 8’8”	7’0” - 9’0”	7’5” - 9’5”	7’10” - 9’10”
4A	8’1” - 10’1”	8’4” - 10’4”	8’8” - 10’8”	9’0” - 11’0”	9’5” - 11’5”	9’10” - 11’10”
5A	10’1” - 12’1”	10’4” - 12’4”	10’8” - 12’8”	11’0” - 13’0”	11’5” - 13’5”	11’10” - 13’10”
6A	12’1” - 14’1”	12’4” - 14’4”	12’8” - 14’8”	13’0” - 15’0”	13’5” - 15’5”	13’10” - 15’10”
7A	14’1” - 16’1”	14’4” - 16’4”	14’8” - 16’8”	15’0” - 17’0”	15’5” - 17’5”	15’10” - 17’10”
8A	16’1” - 18’1”	16’4” - 18’4”	16’8” - 18’8”	17’0” - 19’0”	17’5” - 19’5”	17’10” - 19’10”

Model	Valve Size		
	14”	16”	18”
	Trench Depth	Trench Depth	Trench Depth
1B	4’4” - 6’4”	4’9” - 6’9”	5’1” - 7’1”
2B	6’4” - 8’4”	6’9” - 8’9”	7’1” - 9’1”
3B	8’4” - 10’4”	8’9” - 10’9”	9’1” - 11’1”
4B	10’4” - 12’4”	10’9” - 12’9”	11’1” - 13’1”
5B	12’4” - 14’4”	12’9” - 14’9”	13’1” - 15’1”
6B	14’4” - 16’4”	14’9” - 16’9”	15’1” - 17’1”
7B	16’4” - 18’4”	16’9” - 18’9”	17’1” - 19’1”
8B	18’4” - 20’4”	18’9” - 20’9”	19’1” - 21’1”

Model	Valve Size	
	20”	24”
	Trench Depth	Trench Depth
1C	5’6” - 7’6”	6’4” - 8’4”
2C	7’6” - 9’6”	8’4” - 10’4”
3C	9’6” - 11’6”	10’4” - 12’4”
4C	11’6” - 13’6”	12’4” - 14’4”
5C	13’6” - 15’6”	14’4” - 16’4”
6C	15’6” - 17’6”	16’4” - 18’4”
7C	17’6” - 19’6”	18’4” - 20’4”
8C	19’6” - 21’6”	20’4” - 22’4”

NOTE: For trench depths that fall between those listed, the installer may choose to use the next longer available model.

Dimension	Valve Size										
	Series 2500	Series 2500-1					Series 2500				
	3”	4”	6”	8”	10”	12”	14”	16”	18”	20”	24”
A	8.97	10.38	13.75	16.94	20.34	23.78	29.25	32.75	35.62	39.69	47.84

VALVE WITH INDICATOR PLATE DIMENSIONS

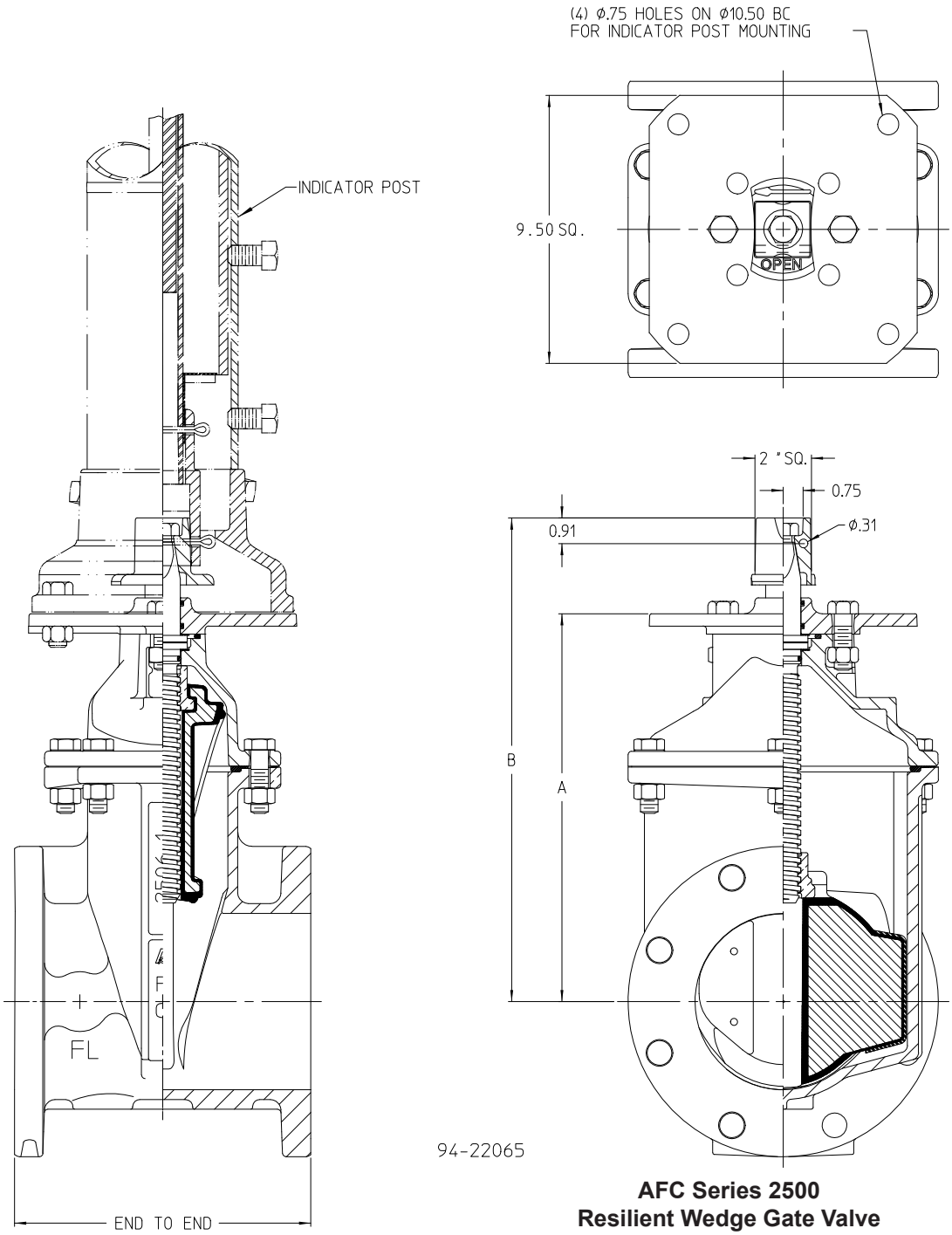

AFC Series 2500
Resilient Wedge Gate Valve

Dimension	Valve Size										
	Series 2500	Series 2500-1				Series 2500					
	3”	4”	6”	8”	10”	12”	14”	16”	18”	20”	24”
A	8.97	10.38	13.75	16.94	20.34	23.78	29.25	32.75	35.62	39.69	47.84
B	11.84	13.91	17.12	20.47	24.06	27.59	33.25	36.75	39.62	43.25	51.25
End to end - FL x FL (Class 125)	8.00	9.00	10.50	11.50	13.00	14.00	15.0	16.00	17.00	18.00	20.00
End to End - MJ x MJ	8.62	10.00	10.50	11.50	12.50	13.50	20.50	20.88	23.00	23.50	25.50

AMERICAN Flow Control®
IP16 (UNDERGROUND) INDICATOR POST

SUBMITTAL SHEET

Quantity:	
Direction to Open:	☐ Left (CCW) ☐ Right (CW)
Actuator:	☐ Wrench ☐ Handwheel
Valve Size Post Used On:	☐ **3”** ☐ **4”** ☐ **6”** ☐ **8”** ☐ **10”** ☐ **12”** ☐ **14”** ☐ **16”** ☐ **18”** ☐ **20”** ☐ **24”**
Model:	
Other Requirements (List):	

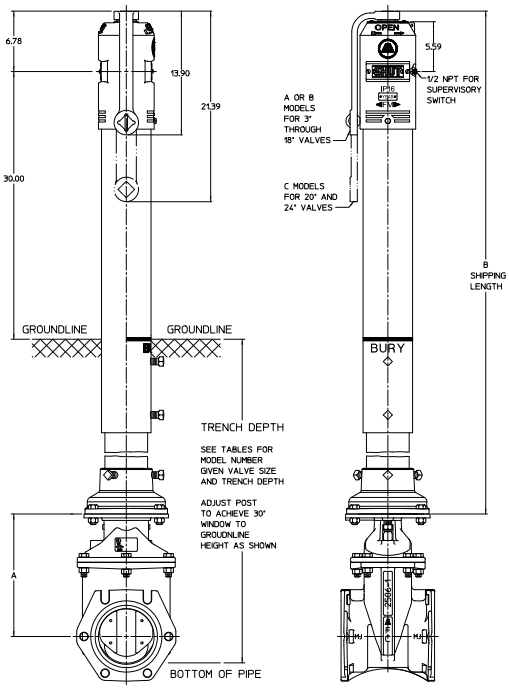

Model	Valve Size					
	3”	4”	6”	8”	10”	12”
	Trench Depth	Trench Depth	Trench Depth	Trench Depth	Trench Depth	Trench Depth
1A	2’1” - 4’1”	2’4” - 4’4”	2’8” - 4’8”	3’0” - 5’0”	3’5” - 5’5”	3’10” - 5’10”
2A	4’1” - 6’1”	4’4” - 6’4”	4’8” - 6’8”	5’0” - 7’0”	5’5” - 7’5”	5’10” - 7’10”
3A	6’1” - 8’1”	6’4” - 8’4”	6’8” - 8’8”	7’0” - 9’0”	7’5” - 9’5”	7’10” - 9’10”
4A	8’1” - 10’1”	8’4” - 10’4”	8’8” - 10’8”	9’0” - 11’0”	9’5” - 11’5”	9’10” - 11’10”
5A	10’1” - 12’1”	10’4” - 12’4”	10’8” - 12’8”	11’0” - 13’0”	11’5” - 13’5”	11’10” - 13’10”
6A	12’1” - 14’1”	12’4” - 14’4”	12’8” - 14’8”	13’0” - 15’0”	13’5” - 15’5”	13’10” - 15’10”
7A	14’1” - 16’1”	14’4” - 16’4”	14’8” - 16’8”	15’0” - 17’0”	15’5” - 17’5”	15’10” - 17’10”
8A	16’1” - 18’1”	16’4” - 18’4”	16’8” - 18’8”	17’0” - 19’0”	17’5” - 19’5”	17’10” - 19’10”

Model	Valve Size		
	14”	16”	18”
	Trench Depth	Trench Depth	Trench Depth
1B	4’4” - 6’4”	4’9” - 6’9”	5’1” - 7’1”
2B	6’4” - 8’4”	6’9” - 8’9”	7’1” - 9’1”
3B	8’4” - 10’4”	8’9” - 10’9”	9’1” - 11’1”
4B	10’4” - 12’4”	10’9” - 12’9”	11’1” - 13’1”
5B	12’4” - 14’4”	12’9” - 14’9”	13’1” - 15’1”
6B	14’4” - 16’4”	14’9” - 16’9”	15’1” - 17’1”
7B	16’4” - 18’4”	16’9” - 18’9”	17’1” - 19’1”
8B	18’4” - 20’4”	18’9” - 20’9”	19’1” - 21’1”

Model	Valve Size	
	20”	24”
	Trench Depth	Trench Depth
1C	5’6” - 7’6”	6’4” - 8’4”
2C	7’6” - 9’6”	8’4” - 10’4”
3C	9’6” - 11’6”	10’4” - 12’4”
4C	11’6” - 13’6”	12’4” - 14’4”
5C	13’6” - 15’6”	14’4” - 16’4”
6C	15’6” - 17’6”	16’4” - 18’4”
7C	17’6” - 19’6”	18’4” - 20’4”
8C	19’6” - 21’6”	20’4” - 22’4”

Note: Trench depths are listed in 6-inch increments. For trench depths that fall between those listed, the installer may choose to use the next longer available model.

Dimension	Valve Size										
	Series 2500	Series 2500-1					Series 2500				
	3”	4”	6”	8”	10”	12”	14”	16”	18”	20”	24”
A	8.97	10.38	13.75	16.94	20.34	23.78	29.25	32.75	35.62	39.69	47.84

Visit our website at http:/american-usa.com/afc

UL Listed and FM Approved.

IP16 INSTALLATION

NOTE: The position of the indicator post target must be set to coincide with the position of the valve. Failure to coordinate these positions can result in inaccurate valve position indication or may render the valve position indication mechanism inoperable.

The installation instructions below are written for a counterclockwise opening (open-left) gate valve. For a clockwise opening (open-right) gate valve, the position of the “OPEN” and “SHUT” target plates are reversed such that the “SHUT” target plate will be on the upper position and the “OPEN” target plate will be positioned beside the appropriate valve size tab as noted below.

Installation

1. The IP16 Indicator Post is factory-set with the “SHUT” Target Plate (IP-16-15) positioned as shown in the following table. When the Indicator Post is mounted to the sizes listed in the table, skip down to instruction item 6.

Factory-Set Target Positions	
IP16 Model	Post Indicator Valve Size
A	6-inch
B	16-inch
C	24-inch

When the Indicator Post is mounted to valve sizes other than those listed in the table, follow the instructions below to remove the Head (IP-16-5) and adjust the “SHUT” Target Plate (IP-16-15).

2. To remove the head (IP-16-5), remove the Operating Wrench (IP-16-2), the eyebolt (IP-16-3) and hex-head bolt (IP-16-9). Using a screwdriver, remove one of the Screws (IP-16-17), located on top of the head (IP-16-5) and adjacent to the Operating Stem Nut (IP-16-1) and loosen the other screw (IP-16-17). Spread the Stuffing Box clips (IP-16-23) apart. Note the overlapping arrangement of the clips for proper re-assembly. Gently lift the Head (IP-16-5) to remove.
3. Locate the desired gate valve size tab on the side of the Target Carrier (IP-16-24), loosen the “SHUT” target plate fastening Screws (IP-16-17) and reposition both “SHUT” Target Plates (IP-16-15) to the center of the desired gate valve size tab and then re-tighten the Screws. Do not rotate the Target Carrier Nut (IP-16-13) on the Operating Stem Nut (IP-16-1) to maintain the factory-set position of Target Carrier (IP-16-24).

NOTE for OPEN RIGHT Indicator Post:

The instructions on front side of tag are written for a counterclockwise opening (open left) gate valve. For a clockwise opening (open right) gate valve, the position of the OPEN and SHUT target plates are reversed such that the SHUT target plate will be in the upper position and the OPEN target plate will be positioned beside the appropriate valve size tab as noted.

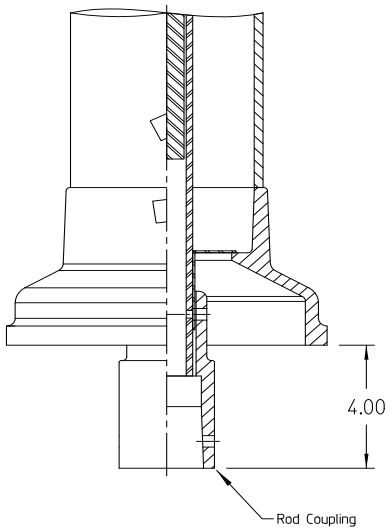

The IP 16 Indicator post does not require disassembly to connect the rod coupling to the gate valve. The IP 16 post rod coupling extends approximately 4 inches below the base, as shown, to allow for an easy connection to the valve wrench nut.

8013668

4. Apply lubricating oil to the O-ring (IP-16-33) at the top of the Operating Stem Nut (IP-16-1). Place the Head (IP-16-5) onto the post and re-assemble the Stuffing Box clips (IP-16-23) into the groove on the Operating Stem Nut (IP-16-5) and tighten the Screws (IP-16-17). Fasten the Head (IP-16-5) to the Upper Barrel (IP-16-29) by threading and tightening the Eye Bolt (IP-16-3) and Hex Head Bolt (IP-16-9). Make sure the Eye Bolt (IP-16-3) is fastened in the bolt hole 90 degrees from the Target Plate sight windows.“OPEN” targets centered in the sight windows of the head. If not, turn the operating nut until the “OPEN” targets are centered in the sight window.
5. Verify that the “OPEN” Target Plates (IP-16-14) are centered in the sight windows of the Head (IP-16-5). If they are not, turn the Operating Stem Nut (IP-16-1) until the “OPEN” Target Plates (IP-16-14) are centered in the sight window.
6. Open the gate valve fully to match the OPEN indication.
7. Pin the Rod Coupling (IP-16-11) of the IP16 Indicator Post to the 2” wrench nut on the gate valve using the Cotter Pin (IP-16-12) provided.
8. Mount the IP16 Indicator Post to the post indicator valve (PIV) plate on the gate valve.
9. Close the gate valve completely to verify that the “SHUT” Target Plate (IP-16-15) displays properly in the sight window.
10. Adjust the IP16 Indicator Post height to accommodate the trench depth by loosening the square head Set Screws (IP-16-8) located below the BURY line on the Upper Barrel (IP-16-29). Once the Indicator Post is adjusted to the proper length, tighten the Set Screws on the Upper Barrel (IP-16-29) to secure the barrels together.

IP16 OPERATION AND MAINTENANCE

Operation

1. Direction of opening is indicated by an arrow cast on to the top of the Indicator Post Head.
2. Using the Operating Wrench (or optional Hand Wheel) supplied with the Indicator Post fully open and close the gate valve before applying system line pressure. Longer wrenches or pipes used as “cheaters” should not be used. Excessive leverage may damage the Indicator Post or the gate valve to which it is connected.
3. AMERICAN recommends the use of AMERICAN Flow Control Series 2500 Gate Valves with the IP16 Indicator Post. In cases where other manufacturers’ gate valves are used, please contact that manufacturer for valve operating instructions. AMERICAN will not be responsible for claims, errors or omissions in documentation provided by other manufacturers.

Maintenance

1. Inspect Indicator Post a minimum of four times per year, or more if conditions warrant.
2. Operate the gate valve through a complete cycle of closing and opening and verify that the post and gate valve function properly and the display of the OPEN and SHUT targets accurately correspond with the position of the gate valve.
3. If it is necessary to replace the Operating Stem Nut (IP-16-1), proceed as follows:
   a. Remove the Operating Wrench (IP-16-2), the eyebolt (IP-16-3) and hex-head bolt (IP-16-9). Using a screwdriver, remove one of the Screws (IP-16-17), located on top of the Head (IP-16-5) and adjacent to the Operating Stem Nut (IP-16-1) and loosen the other Screw (IP-16-17). Spread the Stuffing Box clips (IP-16-23) apart. Note the overlapping arrangement of the clips for proper re-assembly. Gently lift the Head (IP-16-5) to remove.
   b. Lift Operating Stem Nut (IP-16-1) and target carrier assembly off of the Upper Rod (IP-16-28).
   c. Note the position of the Target Carrier Nut (IP-16-13) on the Operating Stem Nut (IP-16-1) and then turn Operating Stem Nut until separated.
   d. Thread the Target Carrier Nut (IP-16-13) onto the replacement Operating Stem Nut (IP-16-1) and return to the previous position.
   e. Return the Operating Stem Nut (IP-16-1) on to the Upper Rod (IP-16-28) and re-assemble the Head (IP-16-5) by following above procedure (a) in reverse order.

IP16 PARTS LIST

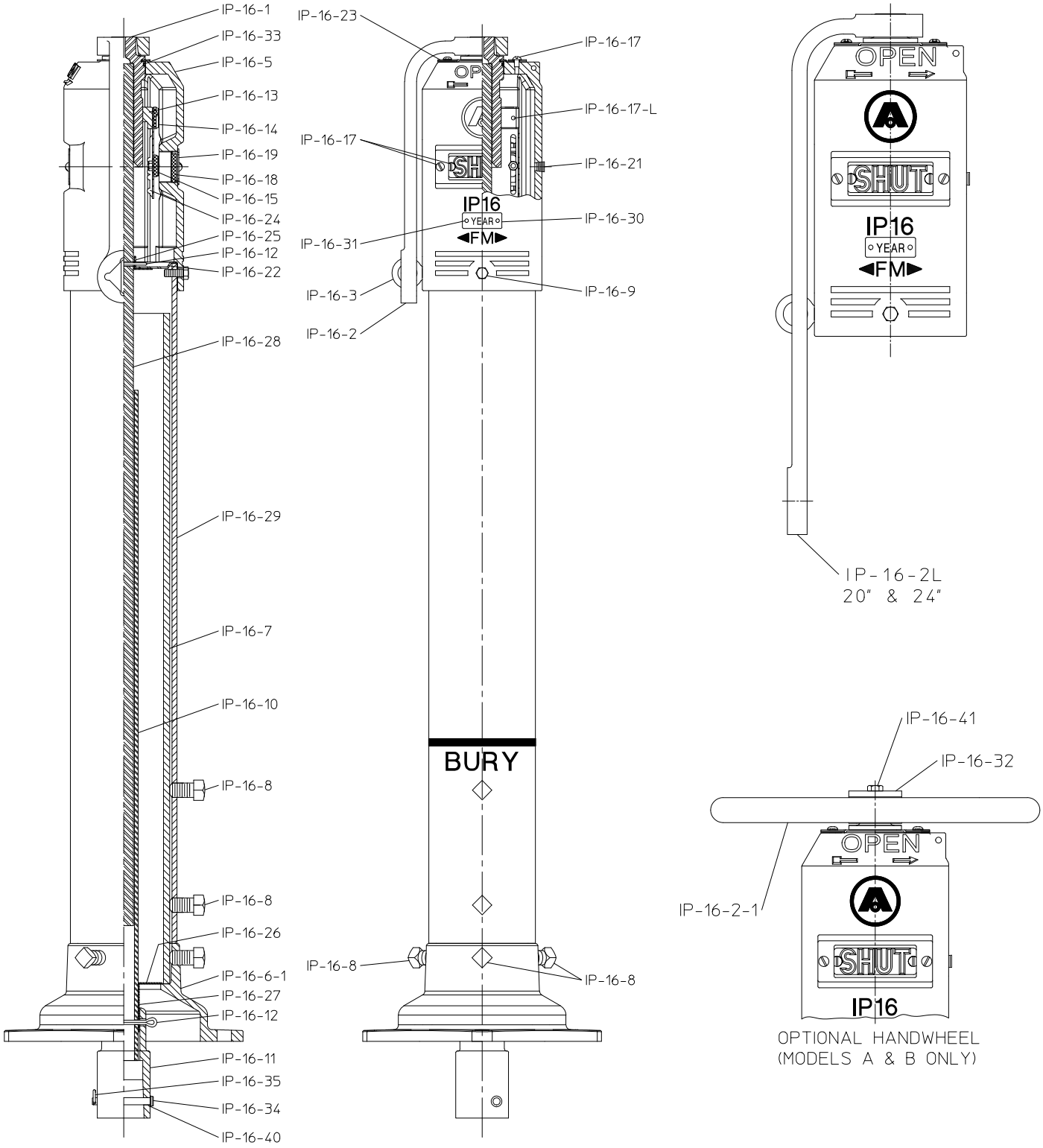

Ref No.	Description	Material	Quantity
IP-16-1	Operating Stem Nut	Stainless Steel	1
IP-16-2	Operating Wrench (Models A & B)	Cast Iron, ASTM A126, Class B	1
IP-16-2L	Operating Wrench (Model C)	Cast Iron, ASTM A126, Class B	1
IP-16-2-1	Handwheel	Cast Iron, ASTM A126, Class B or Ductile Iron, ASTM A536, Grade 65-45-12	1
IP-16-3	Eye Bolt	Steel	1
IP-16-5	Body	Gray Iron, ASTM A48, Class 30	1
IP-16-6-1	Base	Ductile Iron, ASTM A536, Grade 65-45-12	1
IP-16-7	Lower Barrel	Ductile Iron, Grade 60-42-10, or Steel, ASTM A500, Grade B	1
IP-16-8	Set Screw	Steel	5
IP-16-9	Hex Head Bolt	Zinc Plated Steel	1
IP-16-10	Lower Rod	Steel Tubing, ASTM A500	1
IP-16-11	Rod Coupling	Ductile Iron, ASTM A536, Grade 65-45-12	1
IP-16-12	Cotter Pin	Steel	2
IP-16-13	Target Carrier Nut	Brass, ASTM B62, UNS C83600	1
IP-16-14	Target Plate - Open	Aluminum	2
IP-16-15	Target Plate - Shut	Aluminum	2
IP-16-17	Screw and Nut	Stainless Steel	12 and 4
IP-16-17-L	Screw	Stainless Steel	2
IP-16-18	Travel Sign Cover	Plexiglass	2
IP-16-19	Ferrule	Stainless Steel	2
IP-16-21	Pipe Plug	Steel	1
IP-16-22	Guide Stop	Stainless Steel	1
IP-16-23	Stuffing Box	Stainless Steel	2
IP-16-24	Target Carrier	Stainless Steel	2
IP-16-25	Tube Collar	Stainless Steel	1
IP-16-26	Tube Stop Ring	Stainless Steel	1
IP-16-27	Tube Stop Key	Stainless Steel	1
IP-16-28	Upper Rod	Steel	1
IP-16-29	Upper Barrel	Steel, ASTM A53, Grade B	1
IP-16-30	Year Date Tag	Aluminum	1
IP-16-31	Drive Lok Stud	Stainless Steel	2
IP-16-32	Washer	Brass, ASTM B16, UNS C36000	1
IP-16-33	O-ring	Rubber	1
IP-16-34	Clevis Pin	Stainless Steel	1
IP-16-35	Hairpin Cotter Pin	Stainless Steel	1
IP-16-40	Washer	Stainless Steel	1
IP-16-41	Hex Head Bolt	Zinc Plated Steel	1

NOTE: When ordering repair parts, please specify valve size, depth of trench and open direction.

VALVE WITH INDICATOR PLATE PARTS LIST

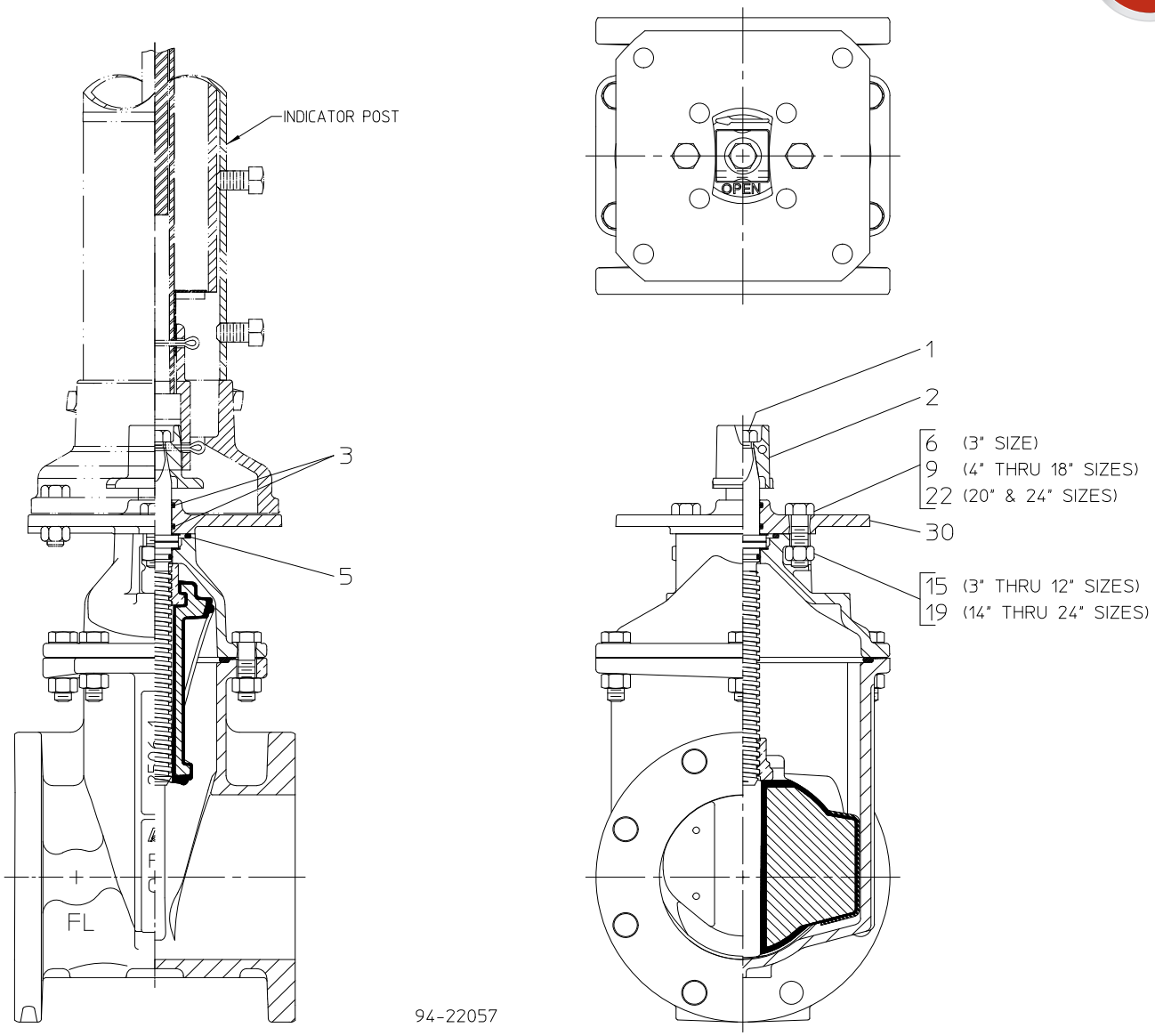

Ref No.	Description	Material	Quantity										
			Series 2500	Series 2500-1					Series 2500				
			3”	4”	6”	8”	10”	12”	14”	16”	18”	20”	24”
1	Hex Hd Bolt, 5/8-11 x 1”	Stainless Steel	1	1	1	1	1	1	-	-	-	-	-
1	Hex Hd Bolt, 5/8-11 x 1-3/4”	Stainless Steel	-	-	-	-	-	-	1	1	1	1	1
2	Operating Nut, 2” Sq.	Ductile Iron	1	1	1	1	1	1	1	1	1	1	1
3	O-ring	Rubber	2	2	2	2	2	2	2	2	2	2	2
5	Stuffing Box Gasket	Rubber O-ring	1	1	1	1	1	1	1	1	1	2	2
6	Hex Hd Bolt, 5/8-11 x 1-3/4”	Stainless Steel	2	-	-	-	-	-	-	-	-	-	-
9	Hex Hd Bolt, 5/8-11 x 2”	Stainless Steel	-	2	2	2	4	4	-	-	-	-	-
9	Hex Hd Bolt, 7/8-9 x 3”	Stainless Steel	-	-	-	-	-	-	4	4	4	-	-
15	Hex Nut, 5/8-11	Stainless Steel	2	2	2	2	4	4	-	-	-	-	-
19	Hex Nut, 7/8-9	Stainless Steel	-	-	-	-	-	-	4	4	4	4	4
22	Stud, 7/8-11 x 3-1/2	Stainless Steel	-	-	-	-	-	-	-	-	-	4	4
30	Indicator Plate	Ductile Iron	1	1	1	1	1	1	1	1	1	1	1

AMERICAN Flow Control

SECTION 5

TAPPING VALVES

Series 2500 Ductile Iron Tapping valves **5A-1 through 5A-19**

AMERICAN

FLOW CONTROL

THE RIGHT WAY

INDEX

TAPPING VALVES

PAGE

INTRODUCTION 5A-2

ORDERING

Dimensions:

Series 2500 Ductile Iron Tapping Valve (Standard NRS, 4”- 24” Sizes)..... 5A-3

Series 2500 Ductile Iron Tapping Valve (NRS with Bevel Gears, 14”- 48” Sizes)..... 5A-4

Optional End Connections:

Series 2500 Class 125 Flange..... 5A-5

Mechanical Joint Accessories:

Series 2500..... 5A-6

Weights..... 5A-7

Submittal Sheet:

Tapping Valve..... 5A-8

INSTALLATION AND TESTING

Tapping Valve..... 5A-9

Ball Valve (NRS with Bevel Gears, 14” - 48” Sizes)..... 5A-10

OPERATION AND MAINTENANCE

Operation, Maintenance, Spare Parts..... 5A-11

REPAIRS

Parts Lists:

Series 2500 Ductile Iron Tapping Valve (Standard NRS, 4”- 8” Sizes)..... 5A-12

Series 2500 Ductile Iron Tapping Valve (Standard NRS, 10” & 12” Sizes)..... 5A-13

Series 2500 Ductile Iron Tapping Valve (Standard NRS, 14”- 24” Sizes)..... 5A-14

Series 2500 Ductile Iron Tapping Valve (NRS with Bevel Gears, 14”- 18” Sizes)..... 5A-15

Series 2500 Ductile Iron Tapping Valve (NRS with Bevel Gears, 20” & 24” Sizes)..... 5A-16

Series 2500 Ductile Iron Tapping Valve (NRS with Bevel Gears, 30”& 36” Sizes)..... 5A-17

Series 2500 Ductile Iron Tapping Valve (NRS with Bevel Gears, 42” & 48” Sizes)..... 5A-18

SPECIFICATIONS..... 5A-19

TAPPING VALVES

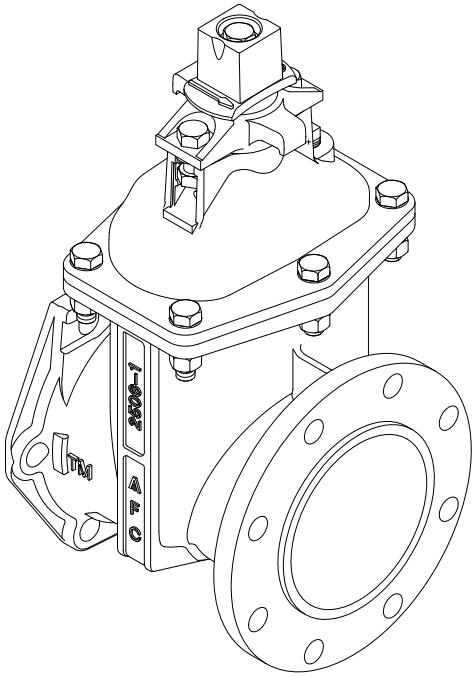

The AMERICAN Series 2500 is available in tapping configurations in sizes 4 in. - 48 in. The tapping valve is provided with a rated working pressure of 250 psig and is designed for use in drinking water, sewage, fire protection systems, as well as irrigation systems.

SERIES 2500 - TAPPING VALVE DIMENSIONS, 4”–24” SIZES

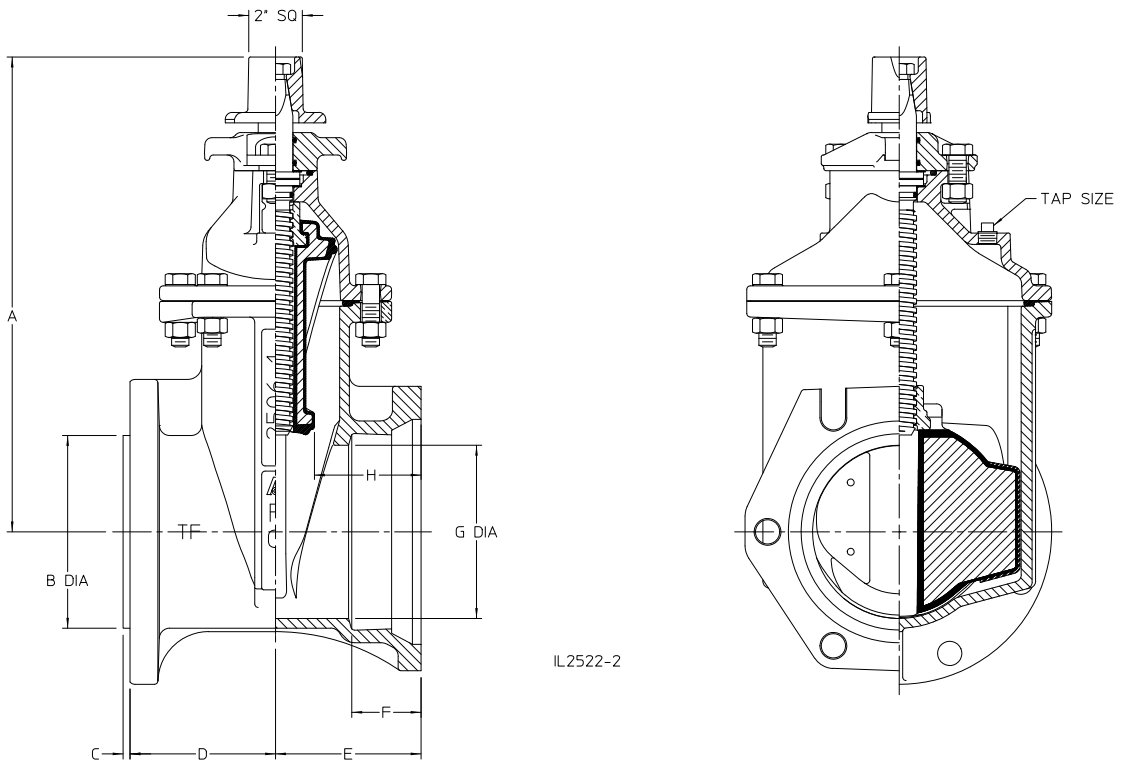

Dimension	Valve Size									
	Series 2500-1					Series 2500				
	4”	6”	8”	10”	12”	14”	16”	18”	20”	24”
A	13.91	17.12	20.47	24.06	27.59	33.25	36.75	39.62	43.25	51.25
B +.000/- .031	4.984	6.984	8.984	10.984	12.984	14.937	16.937	18.937	20.937	24.937
C +/- .016	.188	.250	.250	.250	.250	.250	.250	.250	.250	.250
D (Flange End) (TF) (Class 125)	4.50	5.25	5.75	6.50	7.00	7.50	8.00	8.50	9.00	10.00
E (MJ End) MJ	5.00	5.25	6.62	7.12	7.38	10.25	10.44	11.44	11.75	12.75
F	2.50	2.50	2.50	2.50	2.50	3.50	3.50	3.50	3.50	3.50
G Waterway Diameter	4.25	6.25	8.25	10.25	12.25	14.19	16.19	18.12	20.12	24.12
H	3.73	3.84	4.94	5.30	5.38	7.62	7.56	8.44	8.62	9.00
No. of turns to open	14	20	26	32	38	44	50	56	62	76
Tap Size	3/8 NPT	3/8 NPT	3/8 NPT	3/8 NPT	3/8 NPT	3/8 NPT	3/8 NPT	3/8 NPT	3/8 NPT	3/8 NPT
Max. Cutter Diameter	4.00	6.00	8.00	10.00	12.00	14.00	16.00	18.00	20.00	24.00

NOTES:

1. 4 in.–36 in. valves meet or exceed requirements of ANSI/AWWA C515.
2. 4 in.–16 in. valves may be ordered in configurations which are UL Listed and Approved by FM Approvals.
3. 18 in.–24 in. valves may be ordered in configurations which are UL Listed.
4. 4 in.–48 in. valves have 250 psig AWWA rated working pressure.
5. 4 in.–12 in. valves in Listed and Approved configurations have 250 psig UL and FM rated working pressure.
6. 14 in. and 16 in. valves in Listed and Approved configurations have 200 psig UL and FM rated working pressure.
7. 18 in.–24 in. valves in Listed configurations have 175 psig UL rated working pressure.
8. Fusion bonded epoxy coating meets or exceeds requirements of ANSI/AWWA C550.
9. Mechanical joint ends are in accordance with ANSI/AWWA C153/A21.53 and MSS SP-113.
10. Bolt patterns of Class 125 flanged ends are in accordance with ANSI/AWWA C110/A21.10(ASME B16.1 Class 125)
11. Raised pilot dimensions of flanged ends on tapping valves are in accordance with MSS SP-60.
12. Tapping valves are supplied with flanged-end hardware, including bolts, nuts, ring-type gasket and flange protection kit. The flange-end bolting is furnished in the same material as specified for the valve body bolting.
13. 4 in.–48 in. valves are Certified to NSF/ANSI 61 and NSF/ANSI 372.

SERIES 2500 - TAPPING VALVE WITH BEVEL GEARING DIMENSIONS, 14”– 48” SIZES

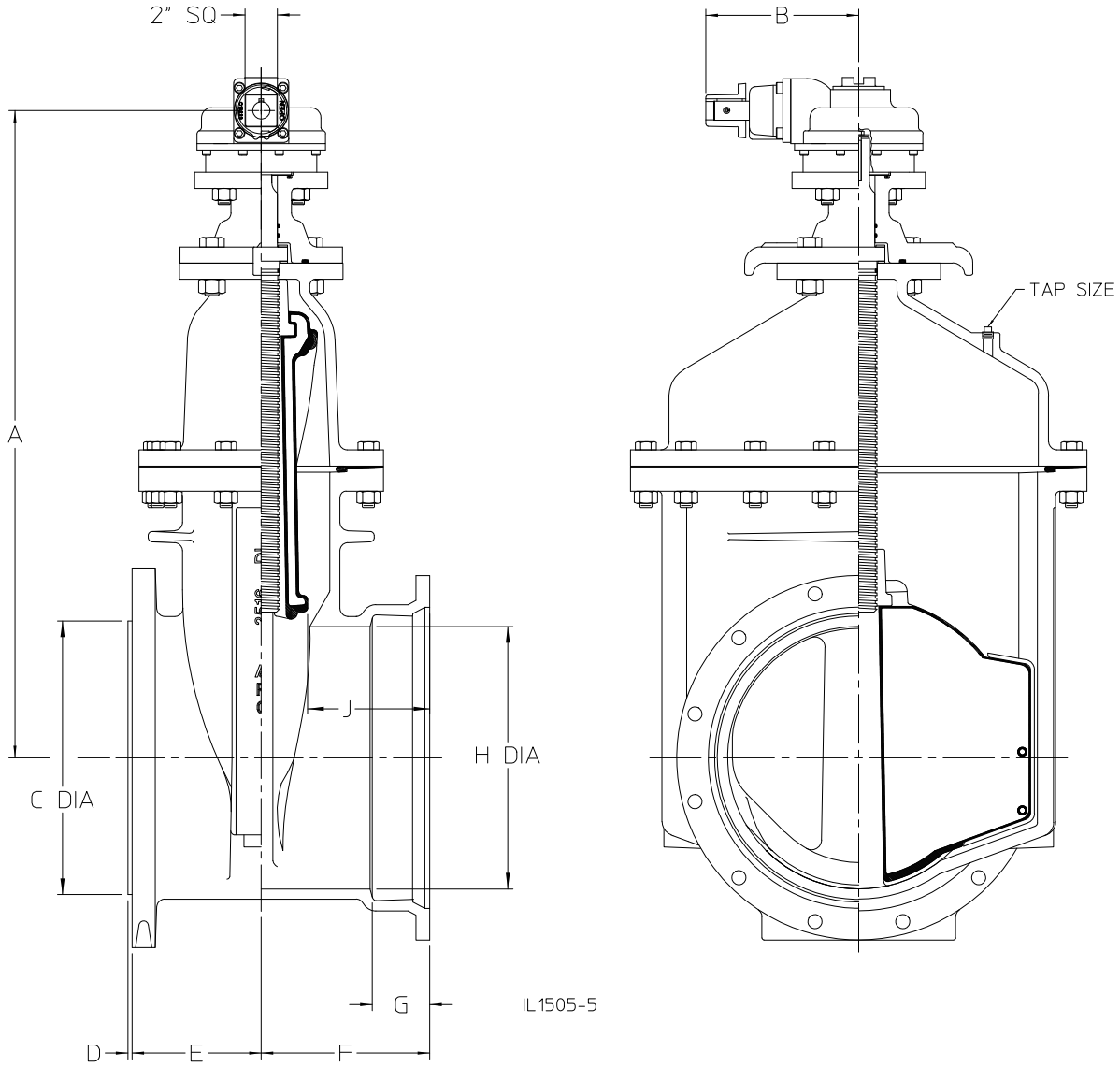

Dimension	Valve Size								
	Series 2500								
	14”	16”	18”	20”	24”	30”	36”	42”	48”
A	35.19	39.75	43.00	44.44	52.62	62.62	74.38	86.28	96.00
B	9.50	9.50	9.50	10.38	10.38	13.56	15.38	19.19	19.19
C +.000/- .031	14.937	16.937	18.937	20.937	24.937	30.937	36.937	43.437	49.437
D +/- .016	.250	.250	.250	.250	.250	.516	.516	.516	.516
E (Flange End) (TF) (Class 125)	7.50	8.00	8.50	9.00	10.00	13.00	15.00	19.00	21.50
F (MJ End) MJ	10.25	10.44	11.50	11.75	12.81	16.88	18.75	23.38	22.50
G	3.50	3.50	3.50	3.50	3.50	4.00	4.00	4.00	4.00
H Waterway Diameter	14.19	16.19	18.12	20.12	24.12	30.22	36.19	42.38	48.38
J	7.62	7.56	8.44	8.62	9.00	12.88	13.97	17.88	17.00
No. of turns to open	88	100	112	186	228	379	448	694	789
Tap Size	3/8 NPT	3/8 NPT	3/8 NPT	3/8 NPT	3/8 NPT	3/8 NPT	3/8 NPT	1/2 NPT	1/2 NPT
Max. Cutter Diameter	14.00	16.00	18.00	20.00	24.00	30.00	36.00	42.00	48.00

SERIES 2500 - CLASS 125 FLANGE DIMENSIONS

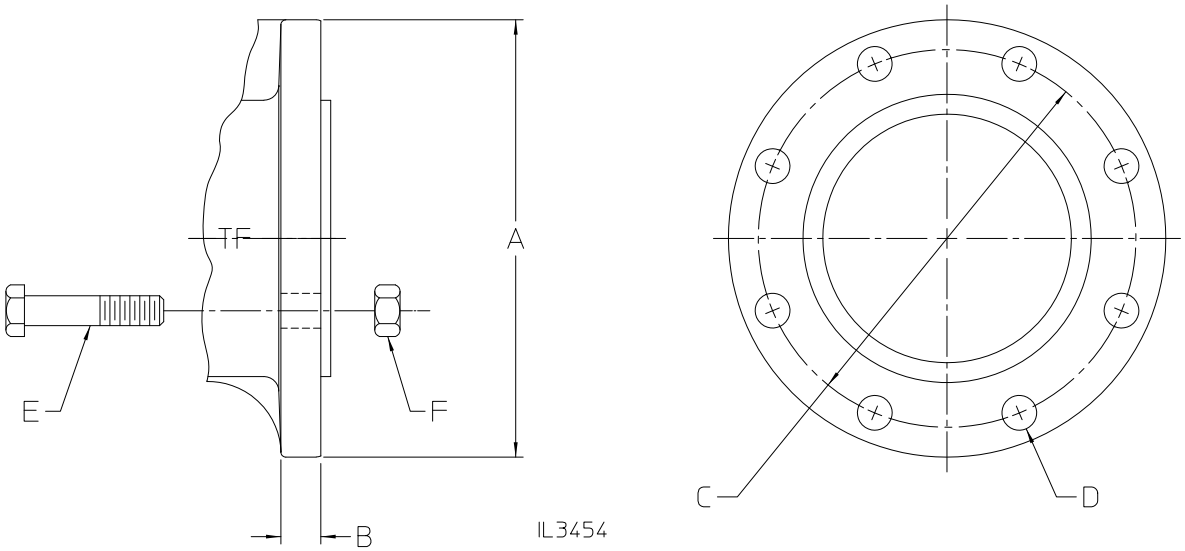

Model	Valve Size	A	B	C	D		E	F
		Diameter of Flange	Flange Thickness	Bolt Circle Diameter	Bolt Holes		Bolt Size See Note 2	No. of Hex Nuts Required
					No.	Size		
Series 2500-1	4”	9.00	.94±.12	7.50	8	.75	5/8-11 x 3	8
	6”	11.00	1.00±.12	9.50	8	.88	3/4-10 x 3-1/2	8
	8”	13.50	1.12±.12	11.75	8	.88	3/4-10 x 3-1/2	8
	10”	16.00	1.19±.12	14.25	12	1.00	7/8-9 x 4	12
	12”	19.00	1.25±.12	17.00	12	1.00	7/8-9 x 4	12

NOTES:
1. Bolt patterns of Class 125 flanged ends are in accordance with ANSI/AWWA C110/A21.10(ASME B16.1 Class 125). Flange thickness tolerances shown are per ANSI/AWWA C110/A21.10.
2. Bolt lengths shown are for standard cast iron flange thicknesses with through holes. Steel or ductile iron flanges with reduced thickness or valves or fittings with tapped holes may require shorter bolts.

Model	Valve Size	A	B	C	D		E					F
		Diameter of Flange	Flange Thick-ness	Bolt Circle Diameter	Bolt Holes		Bolt Size	Bolt Length	Stud Length	No. Bolts	No. Studs	No. of Hex Nuts Required
					No.	Size		(See Note 2)				
Series 2500	14”	21.00	1.38±.19	18.75	12	1.12	1”-8	4-1/2	5-1/2	4	8	20
	16”	23.50	1.44±.19	21.25	16	1.12	1”-8	4-1/2	5-1/2	8	8	24
	18”	25.00	1.56±.19	22.75	16	1.25	1-1/8-7	5	6	8	8	24
	20”	27.50	1.69±.19	25.00	20	1.25	1-1/8-7	5	6	12	8	28
	24”	32.00	1.88±.19	29.50	20	1.38	1-1/4-7	5-1/2	6-1/2	12	8	28
	30”	38.75	2.12±.25	36.00	28	1.38	1-1/4-7	6-1/2	7-1/2	20	8	36
	36”	46.00	2.38±.25	42.75	32	1.62	1-1/2-6	7	8	24	8	40
	42”	53.00	2.62±.25	49.50	36	1.62	1-1/2-6	N/A	9-1/2	N/A	36	72
	48”	59.50	2.75±.25	56.00	44	1.62	1-1/2-6	N/A	9-1/2	N/A	44	88

NOTES:
1. Bolt patterns of Class 125 flanged ends are in accordance with ANSI/AWWA C110/A21.10(ASME B16.1 Class 125) Flange thickness tolerances shown are per ANSI/AWWA C110/A21.10.
2. Bolt lengths shown are for standard cast iron flange thicknesses with through holes. Steel or ductile iron flanges with reduced thickness or valves or fittings with tapped holes may require shorter bolts.

SERIES 2500 - MECHANICAL JOINT ACCESSORIES

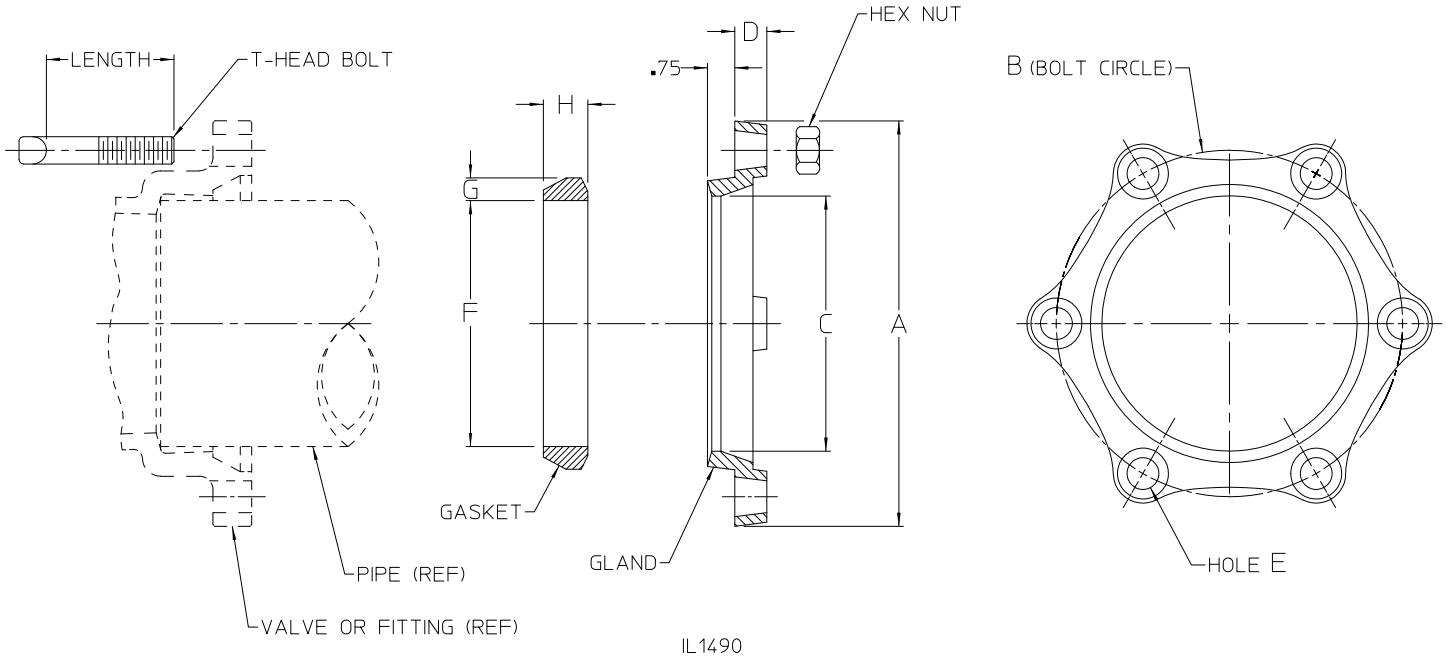

Model	Pipe or Valve Size	Gland							Gasket						T-Head Bolt		
		A Dia.	B Dia.	C Diameter		D	E		F Dia.		G		H		Qty.	Size	Length
				Std. Gland	Pit-Cast Gland		Qty.	Size	Standard Gasket	Transition Gasket	Standard Gasket	Transition Gasket	Standard Gasket	Transition Gasket			
Series 2500-1	4”	9.12	7.50	4.90	5.13	.75	4	.88	4.68	4.43	.62	.77	1.22	1.26	4	3/4-10	3-1/2”
	6’	11.12	9.50	7.00	7.24	.88	6	.88	6.73	6.53	.62	.76	1.22	1.25	6	3/4-10	3-1/2”
	8’	13.37	11.75	9.15	9.46	1.00	6	.88	8.85	8.50	.62	.82	1.22	1.27	6	3/4-10	4”
	10”	15.62	14.00	11.20	11.53	1.00	8	.88	10.87	10.59	.62	.79	1.22	1.26	8	3/4-10	4”
	12”	17.88	16.25	13.30	13.63	1.00	8	.88	12.95	12.56	.62	.84	1.22	1.28	8	3/4-10	4”
Series 2500	14”	20.25	18.75	15.44	N/A	1.25	10	.88	14.99	N/A	.62	N/A	1.22	N/A	10	3/4-10	4-1/2”
	16”	22.50	21.00	17.54	N/A	1.31	12	.88	17.07	N/A	.62	N/A	1.22	N/A	12	3/4-10	4-1/2”
	18”	24.75	23.25	19.64	N/A	1.38	12	.88	19.13	N/A	.62	N/A	1.22	N/A	12	3/4-10	4-1/2”
	20”	27.00	25.50	21.74	N/A	1.44	14	.88	21.20	N/A	.62	N/A	1.22	N/A	14	3/4-10	4-1/2”
	24”	31.50	30.00	25.94	N/A	1.56	16	.88	25.34	N/A	.62	N/A	1.22	N/A	16	3/4-10	5”
	30”	39.12	36.88	32.17	N/A	2.00	20	1.12	31.47	N/A	.73	N/A	1.54	N/A	20	1”-8	6”
	36”	46.00	43.75	38.47	N/A	2.00	24	1.12	37.67	N/A	.73	N/A	1.54	N/A	24	1”-8	6”
	42”	53.12	50.62	44.67	N/A	2.00	28	1.38	43.78	N/A	.73	N/A	1.54	N/A	28	1-1/4-7	6-1/2”
	48”	60.00	57.50	50.97	N/A	2.00	32	1.38	49.98	N/A	.73	N/A	1.54	N/A	32	1-1/4-7	6-1/2”

NOTES:

1. Dimensions shown for standard glands and gaskets are in accordance with ANSI/AWWA C111/A21.11 and ANSI/AWWA C153/A21.53.
2. Dimensions shown are nominal.
3. T-head bolts and nuts are high-strength, low-alloy steel.
4. Glands are ductile iron.

TAPPING VALVE WEIGHTS

Valves

End Connections	Valve Size													
	Series 2500-1					Series 2500								
	4”	6”	8”	10”	12”	14”	16”	18”	20”	24”	30”	36”	42”	48”
FL x MJ (Tapping)	68	109	169	261	380	755	925	1186	1596	2299	4506	7408	11364	15937

NOTE: All weights are in pounds.

AMERICAN Flow Control®
TAPPING VALVE

SUBMITTAL SHEET

AMERICAN Flow Control®
American-Darling Valve & Waterous
A Division of AMERICAN

City Specification:														
Qty.	**4”**	**6”**	**8”**	**10”**	**12”**	**14”**	**16”**	**18”**	**20”**	**24”**	**30”**	**36”**	**42”**	**48”**

Actuator (Check One)		
	☐ NRS with 2” Sq. Oper. Nut	**4” - 12” Valves Only** ☐ NRS with Enclosed Miter Gearing **Also Specify** ☐ 2” Sq. Oper. Nut Parallel to Waterway ☐ 2” Sq. Oper. Nut Perpendicular to Waterway
	14” - 48” Valves Only ☐ NRS with Bevel Gears	**Also Specify** ☐ 2” Sq. Oper. Nut ☐ Handwheel

Open Direction: ☐ Left (C.C.W.) ☐ Right (C.W.)
End Connections:
Mechanical Joint Accessories:
UL Listed, FM Approved:
Other Requirements (List on a Separate Sheet):

Available Configurations	**Series 2500 Ductile Iron Resilient Wedge**													
	Series 2500-1					**Series 2500**								
	4”	6”	8”	10”	12”	14”	16”	18”	20”	24”	30”	36”	42”	48”
ACTUATORS														
NRS with 2” Sq. Oper. Nut	X	X	X	X	X	X	X	X	X	X	N/A	N/A	N/A	N/A
NRS with Handwheel	X	X	X	X	X	X	X	X	X	X	N/A	N/A	N/A	N/A
NRS with Enclosed Miter Gearing	X	X	X	X	X	N/A	N/A	N/A	N/A	N/A	N/A	N/A	N/A	N/A
NRS with Bevel Gears	N/A	N/A	N/A	N/A	N/A	X	X	X	X	X	X	X	X	X
END CONNECTIONS														
Flange x Mech Joint (FL x MJ, Tap)	X	X	X	X	X	X	X	X	X	X	X	X	X	X

KEY: X = Available N/A = Not Available

NOTES:

1. Series 2500 - Meets or exceeds requirements of ANSI/AWWA C515 (4 in. - 36 in.), 250 psig rated working pressure, is NSF/ANSI 61 and NSF/ANSI 372 (4 in. - 48 in.), and has fusion bonded epoxy coating which meets or exceeds ANSI/AWWA C550. 4 in. - 16 in. valves may be ordered in configurations which are UL Listed and Approved by FM Approvals. 18 in. - 24 in. valves may be ordered in configurations which are UL Listed.
2. Shell cutter sizes that can be used are as follows:

Maximum Shell Cutter Size That May Be Used													
Series 2500-1					Series 2500								
4”	**6”**	**8”**	**10”**	**12”**	**14”**	**16”**	**18”**	**20”**	**24”**	**30”**	**36”**	**42”**	**48”**
Full Size May be Used													

Visit our website at http://www.american-usa.com/afc

Storage

Valves are palletized when shipped, which provides suitable protection from weather and sunlight during storage. If palletizing is disbanded and valves removed, remaining valves should be suitably covered or stored elsewhere with the valve stem vertical.

- Always store valves fully closed.
- When possible, keep valves out of the weather.
- In cold climates, keep the inside of the valve drained of any water to prevent freezing.
- Whenever possible, cover valves with a waterproof covering.
- Protect all parts of the valve at all times

Inspection Before Installation

- Check to make sure that the valve end connections are clean and that the valve is not damaged.
- Check opening direction and other details against specification.
- Open and close the valve to make sure it works properly.
- Clean the inside of the valve to remove all contaminants that may affect water system purity.

  Keep the valve closed when placing in trench.

AMERICAN recommends the use of AMERICAN Flow Control Series 2800 tapping sleeves. Please refer to Section 6A of the AMERICAN Valve and Hydrant Manual for tapping sleeve installation instructions. In cases, where other tapping sleeve designs or manufacturers are used, please contact that manufacturer for specific tapping sleeve installation and testing instructions. Applicable tapping sleeve dimensions should be in compliance with the Standard Practice as defined in MSS SP-60. AMERICAN will not be responsible for claims, errors or omissions in documentation provided by other manufacturers.

WARNING: DO NOT TEST WITH COMPRESSED AIR MAY CAUSE SERIOUS INJURY OR DEATH.

Note: Use only water to test the tapping valve and sleeve assembly. Under no circumstance should air ever be used to conduct this test. Testing with air could result in serious injury and/or even death.

1. Place gasket on tapping valve and bolt valve to sleeve. After valve is bolted securely in place, open valve fully and observe that the resilient wedge is clear of the waterway. Then close valve completely. Also refer to flanged end valve installation instructions if installing a Series 2500 Resilient Wedge Tapping Valve.
2. Safely install proper blocking under valve and behind sleeve to carry pipe thrust.
3. Prior to making the tap, test the tapping valve and sleeve as a complete unit by connecting the test pressure to the pipe tap on the back of the tapping sleeve. **Always test with water.** Test pressure must not exceed rated working pressure of the sleeve or valve. The pressure test should reveal any leaks or other problems caused by improper installation of the sleeve. Any leaks or other problems must be remedied before the pipe is tapped. If sleeve has no test plug, test sleeve and valve assembly through test plug in valve bonnet with the wedge in open position
4. Attach tapping machine to valve, making sure machine is centered and square with the end of the valve to assure straight travel of cutter through valve. With tapping machine attached and cutter fully retracted, check to be sure the valve can be closed completely, then open the valve fully.
5. Final check before tapped: Open the valve fully. Make sure the cutter does not damage gate or seats of valve (or touch any interior surface of a resilient wedge tapping valve). If any resistance is felt when hand feeding the cutter into position, stop and correct before making the tap.

   Full size cutters may be used with the following Series:
   - Series 2500-1: 4 in. - 12 in. sizes
   - Series 2500: 14 in. - 48 in. sizes

BALL VALVE INSTALLATION AND TESTING, 14”–48” SIZES

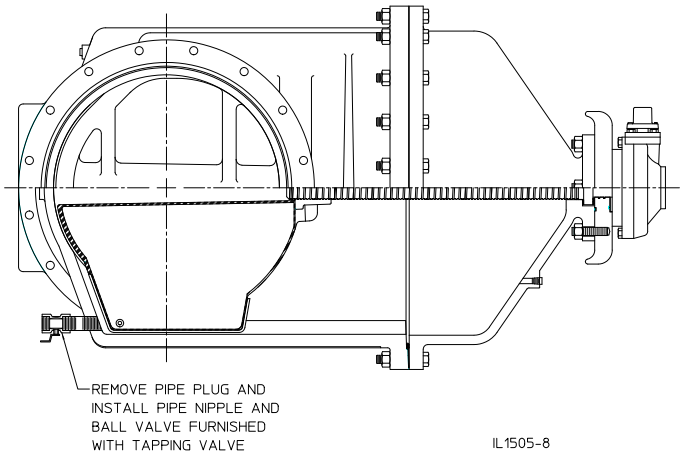

All tapping valves with bevel gears (for horizontal installation) will be furnished with tapped and plugged holes, and a pipe nipple and ball valve for flushing. All tapping valves for vertical installation will have tapped and plugged holes but will not be furnished with pipe nipple and ball valve since flushing should not be necessary for vertical installations.

When a valve is installed horizontally, the pipe plug on the lower side of the valve body must be removed and the nipple and ball valve installed. After the tap is made, the ball valve should be used to flush any tapping debris (shavings) out of the track area of the valve as it is being closed.

AMERICAN will not accept responsibility for problems encountered if a horizontal tap is made with a valve that does not have the nipple and ball valve flushing connection.

Valves furnished without tapped and plugged holes should not be tapped in the field for installation of the ball valve assembly.

The following procedure should be followed to flush the interior of the tapping valve to remove shavings that could affect closure of the valve.

1. After the main valve has been installed and prior to adding pressure on the tapping sleeve, remove the lower pipe plug from the bottom of the main valve.
2. Install the pipe nipple and the ball valve using Teflon tape or other pipe sealing compound. Make sure the ball valve handle opens away from the body of the tapping valve.
3. It is good practice at this point to cap the end of the main valve in the open position and test the system, including the main valve, ball valve and tapping sleeve to ensure all seals are watertight.

WARNING: DO NOT TEST WITH COMPRESSED AIR. MAY CAUSE SERIOUS INJURY OR DEATH.

Note: Use only water to test the tapping valve and sleeve assembly. Under no circumstance should air ever be used to conduct this test. Testing with air could result in serious injury and/or even death.

4. Once the wet tap has been made and the tapping cutter and coupon have been extracted from the main valve waterway, begin closing the main valve.
5. When the main valve is approximately halfway closed, open the ball valve and flush the line for several seconds, then close the ball valve.
6. When the main valve is nearly closed or when torque increase is first noticed through the actuator, open the ball valve and flush again for several seconds or until the color of the water clears, then close the ball valve.
7. Apply necessary torque to the actuator to seal the main valve. Care should be taken not to over-torque the valve as damage may result. Torque may vary. Contact AMERICAN Flow Control with any questions.
8. Once the tap is complete and the tapping machine has been removed, remove the handle of the ball valve and install the pipe plug (from Step #1) in the end to prevent dirt from getting into the ball valve.
9. Use care during backfilling to prevent damage to the ball valve and pipe nipple.

Operation

1. Direction of opening is normally indicated by an arrow cast on the handwheel or wrench nut of the valve.
2. Operate gate valves from full closed to full open position and back before applying pressure.
3. Close gate valve slowly against pressure to avoid damage from surge or water hammer.
4. Valves installed on liquid service subject to freezing conditions should be protected to prevent trapping of liquid in the bonnet cavity, expansion on freezing and subsequent damage. The same is true of valves which are subject to considerable temperature increases. Trapped pressure should be vented back to the upstream side to prevent buildup of pressure in the valve bonnet due to high temperature expansion.
5. Valves should be opened and closed without the use of excessive torque applied to the handwheel or wrench nut. Excessive torque may damage the valve.
6. Gate valves are designed for open and close service. Their multi-turn design is not intended for throttling. As such, the valve should never be left in a partial open or closed position for extended periods.
7. For troubleshooting information, please refer to Section 3A of the AMERICAN Valve and Hydrant Manual.

Maintenance

1. Operate valves at regular intervals. The necessary length of time between the operation of the valve depends upon the time the valve has been in service and the service conditions, but more specifically whatever time period is found to be satisfactory based on local experience. Operation should occur as a minimum of once per year, but in general as detailed per Section A.6, of Appendix A, of ANSI/AWWA C515.
2. Use an AMERICAN Flow Control recommended food-grade grease for the stem threads and thrust collar.
3. Chipped spots in the epoxy coating should be repaired with a liquid two-part epoxy.

WARNING: DO NOT REMOVE BONNET BOLTS WITH VALVE UNDED PRESSURE. SERIOUS INJURY OR DEATH MAY OCCUR.

Spare Parts

1. Under most conditions, the only spare parts needed for the valve would be upper and lower stem O-rings. Under rigorous service, stems, wedges, upper and lower stem O-rings and thrust washers should be carried as spare parts.
2. Use parts list drawings as a guide for disassembly and ordering repair parts. Also refer to disassembly/reassembly instructions.

Typical Operating Torque At Rated Working Pressure

Valve Size	Closing Torque Ft-lbs	Opening Torque Ft-lbs
2”	15-20	15-20
2-1/2”	15-20	15-20
3”	30-40	30-40
4”	30-40	30-40
6”	50-60	50-80
8”	70-80	60-90
10”	90-100	125-150
12”	100-125	140-175
14”	Contact Factory	
16”	Contact Factory	
18”	Contact Factory	
20”	Contact Factory	
24”	Contact Factory	
30”	Contact Factory	
36”	Contact Factory	
42”	Contact Factory	
48”	Contact Factory	

SERIES 2500 - TAPPING VALVE PARTS LIST, 4”–8” SIZES

Ref No	Description	Material	Qty. Series 2500-1		
			4”	6”	8”
1	Hex Head Bolt, 5/8-11 x 1”	Stainless Steel	1	1	1
2	Operating Nut, 2” Square	Ductile Iron	1	1	1
3	O-ring	Rubber	2	2	2
5	Stuffing Box Gasket	Rubber O-ring	1	1	1
6	Hex Head Bolt, 5/8-11 x 1-3/4”	Stainless Steel	2	2	2
7	Stuffing Box	Ductile Iron	1	1	1
8	Bonnet	Ductile Iron	1	1	1
9	Hex Head Bolt, 5/8-11 x 2”	Stainless Steel	4	-	-
10	Bonnet Gasket	Rubber	1	1	1
11	Body	Ductile Iron	1	1	1
12	Stem	Bronze	1	1	1
		Stainless Steel (Optional)			
13	Wedge Nut	Bronze	1	1	1
14	Resilient Wedge	Ductile Iron, Encapsulated with EPDM Rubber	1	1	1
15	Hex Nut, 5/8-11	Stainless Steel	6	8	10
19	Hex Head Bolt, 5/8-11 x 2-1/4”	Stainless Steel	-	6	-
21	Hex Head Bolt, 5/8-11 x 2-1/2”	Stainless Steel	-	-	8
40	UL/FM Label	Film	1	1	1
45	Pipe Plug, 3/8 NPT	Stainless Steel	1	1	1
49	O-ring	Rubber	1	1	1
65	Upper Thrust Washer	Stainless Steel	2	2	2
69	Wedge Cover	Polymer	2	2	2

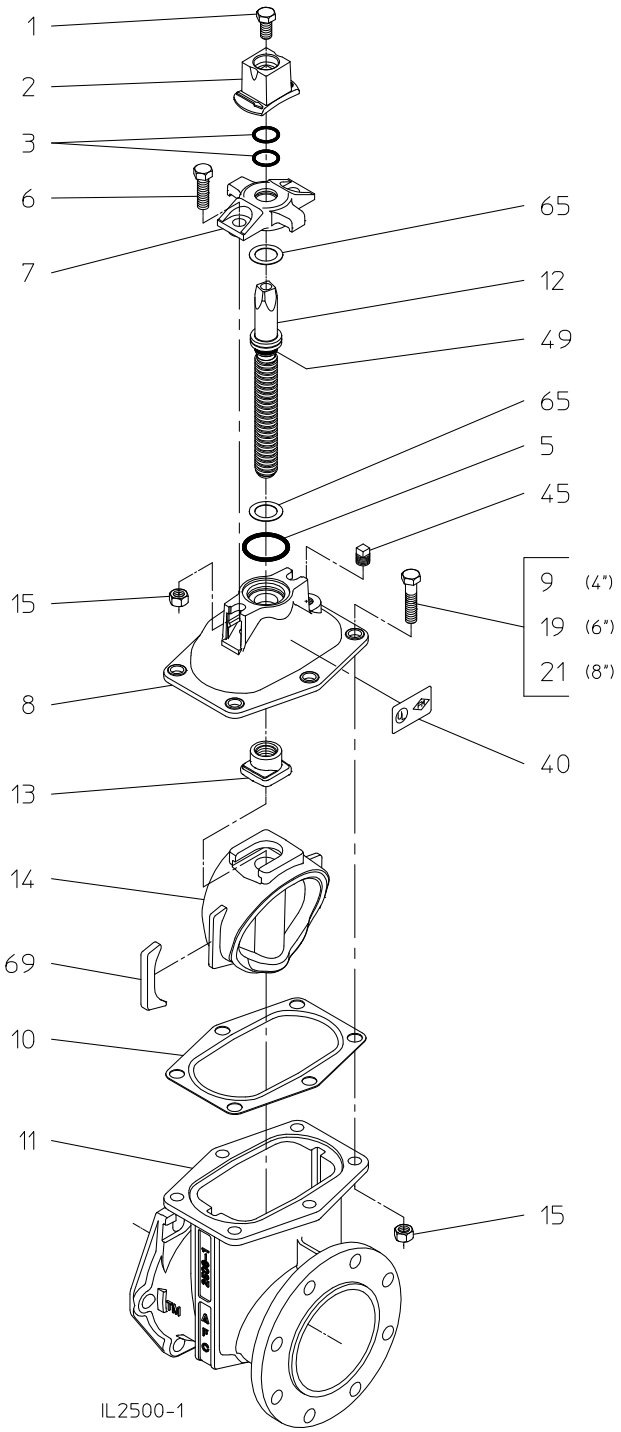

SERIES 2500 - TAPPING VALVE PARTS LIST, 10” & 12” SIZES

Ref No.	Description	Material	Qty. Series 2500-1 10”	Qty. Series 2500-1 12”
1	Hex Head Bolt, 5/8-11 x 1”	Stainless Steel	1	1
2	Operating Nut, 2” Square	Ductile Iron	1	1
3	O-ring	Rubber	2	2
5	Stuffing Box Gasket	Rubber O-ring	1	1
7	Stuffing Box	Ductile Iron	1	1
8	Bonnet	Ductile Iron	1	1
9	Hex Head Bolt, 5/8-11 x 2”	Stainless Steel	4	4
10	Bonnet Gasket	Rubber	1	1
11	Body	Ductile Iron	1	1
12	Stem	Bronze	1	1
		Stainless Steel (Optional)		
13	Wedge Nut	Bronze	1	1
14	Resilient Wedge	Ductile Iron, Encapsulated with EPDM Rubber	1	1
15	Hex Nut, 5/8-11	Stainless Steel	14	4
22	Hex Head Bolt, 5/8-11 x 2-3/4”	Stainless Steel	10	-
40	UL/FM Label	Film	1	1
45	Pipe Plug, 3/8 NPT	Stainless Steel	1	1
48	Hex Nut, 3/4-10	Stainless Steel	-	10
49	O-ring	Rubber	1	1
65	Upper Thrust Washer	Stainless Steel	2	2
67	Hex Head Bolt, 3/4-10 x 3”	Stainless Steel	-	10
69	Wedge Cover	Polymer	2	2

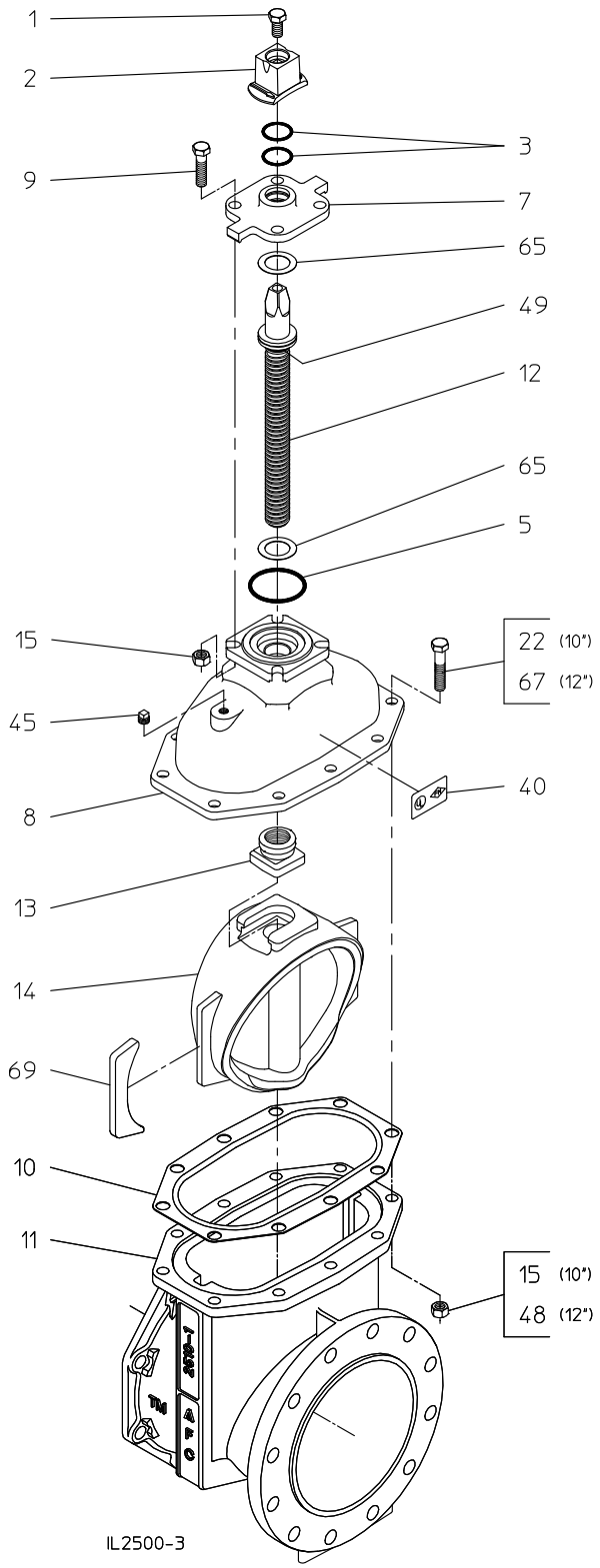

SERIES 2500 - TAPPING VALVE PARTS LIST, 14”–24” SIZES

Ref No.	Description	Material	Qty. Series 2500				
			14”	16”	18”	20”	24”
1	Hex Head Bolt, 5/8-11 x 1-3/4”	Stainless Steel	1	1	1	1	1
2	Operating Nut, 2” Square	Ductile Iron	1	1	1	1	1
3	O-ring	Rubber	2	2	2	2	2
4	Upper Thrust Washer	Delrin	1	1	1	1	1
5	Stuffing Box Gasket	Rubber O-ring	1	1	1	1	1
6	O-ring	Rubber	1	1	1	1	1
7	Stuffing Box	Ductile Iron	1	1	1	1	1
8	Bonnet	Ductile Iron	1	1	1	1	1
9	Hex Head Bolt, 7/8-9 x 3”	Stainless Steel	4	4	4	-	-
9	Hex Head Bolt, 7/8-9 x 4”	Stainless Steel	-	-	-	4	4
10	Bonnet Gasket	Rubber	1	1	1	1	1
11	Body	Ductile Iron	1	1	1	1	1
12	Stem	Bronze / Stainless Steel (Optional)	1	1	1	1	1
13	Wedge Nut	Bronze	1	1	1	1	1
14	Resilient Wedge	Ductile Iron, Coated with EPDM Rubber	1	1	1	1	1
15	Wedge Cover	Polymer	2	2	2	2	2
16	Wedge Cover Pin	Polymer	2	4	4	2	2
17	Hex Head Bolt, 3/4-10 x 3-1/2”	Stainless Steel	14	16	-	-	-
17	Hex Head Bolt, 7/8-9 x 4”	Stainless Steel	-	-	16	-	-
17	Hex Head Bolt, 7/8-9 x 4-1/2”	Stainless Steel	-	-	-	18	-
17	Hex Head Bolt, 7/8-9 x 5”	Stainless Steel	-	-	-	-	20
18	Hex Nut, 3/4-10	Stainless Steel	14	16	-	-	-
18	Hex Nut, 7/8-9	Stainless Steel	-	-	16	18	20
19	Hex Nut, 7/8-9	Stainless Steel	4	4	4	4	4
20	Pipe Plug, 3/8 NPT	Stainless Steel	1	1	1	1	
21	Lower Thrust Washer	Delrin	1	1	1	1	1

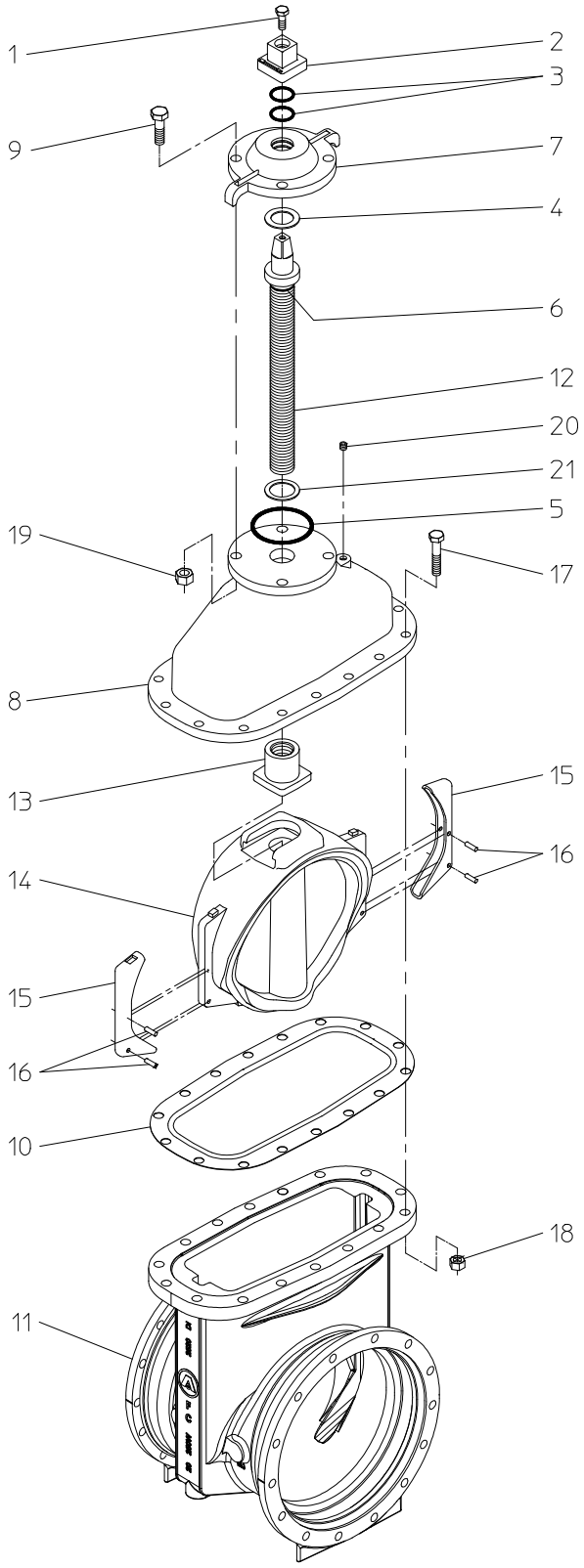

IL1507-2

SERIES 2500 - TAPPING VALVE W/BEVEL GEARING PARTS LIST, 14” –18” SIZES

Ref No.	Description	Material	Qty. Series 2500 14”	16”	18”
1-K	Key 8 mm x 7 mm x 40 mm	Steel	1	1	1
2-K	Operating Nut, 2” Square	Ductile Iron	1	1	1
3	O-ring	Rubber	2	2	2
4	Upper Thrust Washer	Delrin	1	1	1
5	Stuffing Box Gasket	Rubber O-ring	1	1	1
6	O-ring	Rubber	1	1	1
7	Stuffing Box	Ductile Iron	1	1	1
8	Bonnet	Ductile Iron	1	1	1
9	Hex Head Bolt, 7/8-9 x 3”	Stainless Steel	4	4	4
10	Bonnet Gasket	Rubber	1	1	1
11	Body	Ductile Iron	1	1	1
12	Stem	Bronze	1	1	1
		Stainless Steel (Optional)			
13	Wedge Nut	Bronze	1	1	1
14	Resilient Wedge	Ductile Iron, Coated with EPDM Rubber	1	1	1
15	Wedge Cover	Polymer	2	2	2
16	Wedge Cover Pin	Polymer	2	4	4
17	Hex Head Bolt, 3/4-10 x 3-1/2”	Stainless Steel	14	16	-
17	Hex Head Bolt, 7/8-9 x 4”	Stainless Steel	-	-	16
18	Hex Nut, 3/4-10	Stainless Steel	14	16	-
18	Hex Nut, 7/8-9	Stainless Steel	-	-	16
19	Hex Nut, 7/8-9	Stainless Steel	4	4	4
20	Pipe Plug, 3/8 NPT	Stainless Steel	1	1	1
21	Lower Thrust Washer	Delrin	1	1	1
22	Stud, 5/8-11 x 2-3/4”	Stainless Steel	4	4	4
23	Hex Nut, 5/8-11	Stainless Steel	4	4	4
25	Square Key, 5/16 x 2-1/2	Hardened Steel	1	1	1
27	Bevel Gear Operator 2:1	Rotork IB5	1	1	1
29	Actuator Gasket	Rubber O-ring	1	1	1
30	Hex Head Bolt, 3/8-16 x 3/4”	Zinc Plated Steel	1	1	1
31	Washer	Steel	1	1	1
60-K	Spring Pin, 1/4 x 3/4”	Stainless Steel	1	1	1

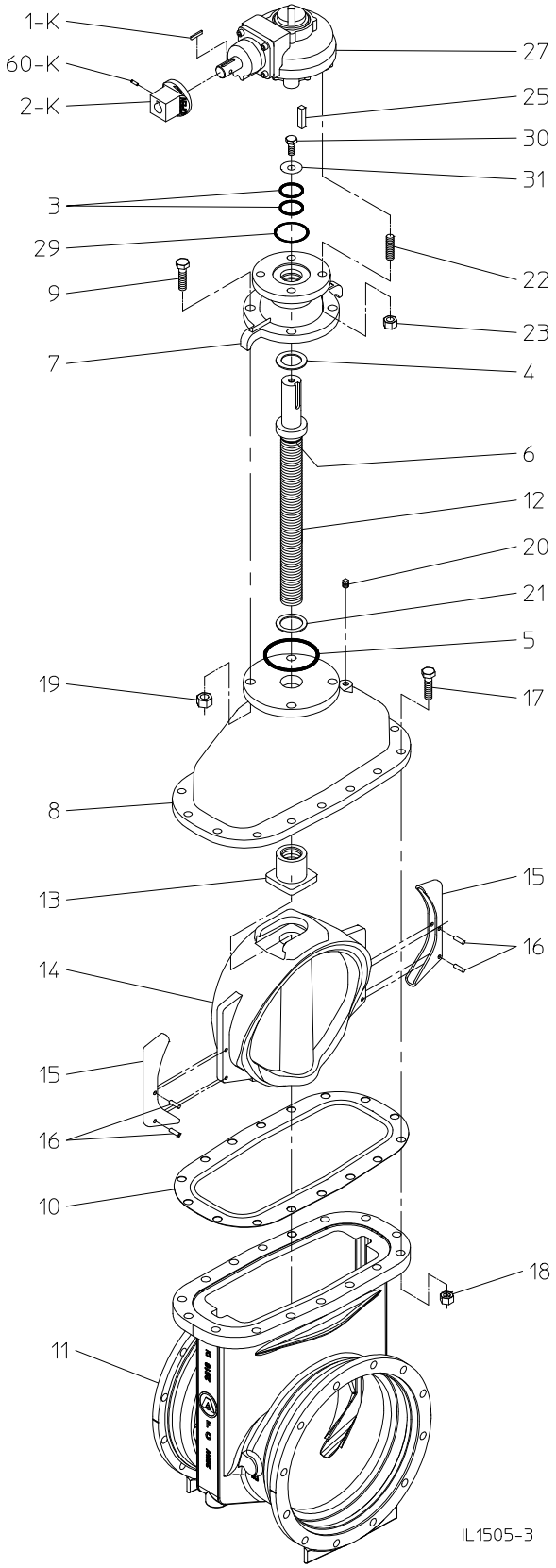

SERIES 2500 - TAPPING VALVE W/BEVEL GEARING PARTS LIST, 20” & 24” SIZES

Ref No.	Description	Material	Qty. Series 2500 20”	Qty. Series 2500 24”
1-K	Key 8 mm x 7 mm x 40 mm	Steel	1	1
2-K	Operating Nut, 2” Square	Ductile Iron	1	1
3	O-ring	Rubber	2	2
4	Upper Thrust Washer	Delrin	1	1
5	Stuffing Box Gasket	Rubber O-ring	1	1
6	O-ring	Rubber	1	1
7	Stuffing Box	Ductile Iron	1	1
8	Bonnet	Ductile Iron	1	1
10	Bonnet Gasket	Rubber	1	1
11	Body	Ductile Iron	1	1
12	Stem	Bronze	1	1
		Stainless Steel (Optional)		
13	Wedge Nut	Bronze	1	1
14	Resilient Wedge	Ductile Iron, Coated with EPDM Rubber	1	1
15	Wedge Cover	Polymer	2	2
16	Wedge Cover Pin	Polymer	2	2
17	Hex Head Bolt, 7/8-9 x 4-1/2”	Stainless Steel	18	-
17	Hex Head Bolt, 7/8-9 x 5”	Stainless Steel	-	20
18	Hex Nut, 7/8-9	Stainless Steel	18	20
20	Pipe Plug, 3/8 NPT	Stainless Steel	1	1
21	Lower Thrust Washer	Delrin	1	1
22	Stud, 7/8-9 x 3-1/2”	Stainless Steel	4	4
23	Hex Nut, 7/8-9	Stainless Steel	4	4
25	Square Key, 1/2 x 2-3/4	Hardened Steel	1	1
27	Bevel Gear Operator 3:1	Rotork IB7	1	1
28	Socket Head Cap Screw 3/4-10 x 2”	Stainless Steel	4	4
29	Actuator Gasket	Rubber O-ring	1	1
30	Hex Head Bolt, 1/2-13 x 1”	Zinc Plated Steel	1	1
31	Washer	Steel	1	1
60-K	Spring Pin, 1/4 x 3/4”	Stainless Steel	1	1

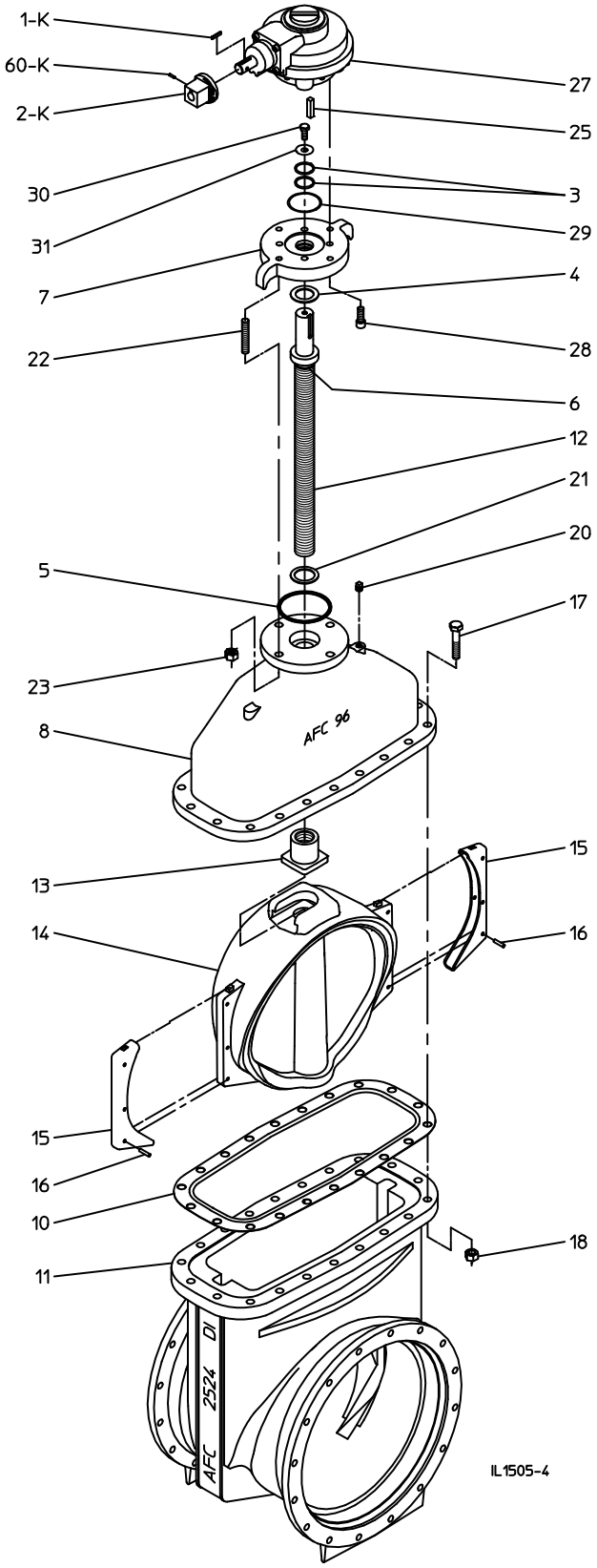

SERIES 2500 - TAPPING VALVE W/BEVEL GEARING PARTS LIST, 30” & 36” SIZES

Ref No.	Description	Material	Qty. Series 2500 30”	Qty. Series 2500 36”
1-K	Key 8 mm x 7 mm x 40 mm	Steel	1	1
2-K	Operating Nut, 2” Square	Ductile Iron	1	1
3	O-ring	Rubber	2	2
4	Upper Thrust Washer	Delrin	1	1
5	Stuffing Box Gasket	Rubber O-ring	1	1
6	O-ring	Rubber	1	1
7	Stuffing Box	Ductile Iron	1	1
8	Bonnet	Ductile Iron	1	1
10	Bonnet Gasket	Rubber	1	-
10	Bonnet Gasket	EPDM Rubber	-	1
11	Body	Ductile Iron	1	1
12	Stem	Bronze	1	1
		Stainless Steel (Optional)		
13	Wedge Nut	Bronze	1	1
14	Resilient Wedge	Ductile Iron, Coated with EPDM Rubber	1	1
15	Wedge Cover	Polymer	2	2
16	Wedge Cover Pin	Polymer	2	2
17	Hex Head Bolt, 1”-8 x 6”	Stainless Steel	24	-
17	Hex Head Bolt, 1-1/4-7 x 7”	Stainless Steel	-	28
18	Hex Nut, 1”-8	Stainless Steel	24	-
18	Hex Nut, 1-1/4-7	Stainless Steel	-	28
20	Pipe Plug, 3/8 NPT	Stainless Steel	4	4
21	Lower Thrust Washer	Delrin	1	1
22	Stud, 1”-8 x 6”	Stainless Steel	6	-
22	Stud, 1”-8 x 6-1/2”	Stainless Steel	-	8
23	Hex Nut, 1”-8	Stainless Steel	12	16
25	Square Key, 1/2 x 3-1/2	Hardened Steel	1	-
25	Square Key, 5/8 x 4”	Hardened Steel	-	1
27	Bevel Gear Operator 4:1	Rotork IB8	1	-
27	Bevel Gear Operator 4:1	Rotork IB10	-	1
28	Socket Head Cap Screw 3/4-10 x 2”	Stainless Steel	4	-
28	Socket Head Cap Screw 5/8-11 x 2”	Stainless Steel	-	8
29	Actuator Gasket	Rubber O-ring	1	1
30	Hex Head Bolt, 3/4-10 x 1”	Zinc Plated Steel	1	1
31	Washer	Steel	1	1
60-K	Spring Pin, 1/4 x 3/4”	Stainless Steel	1	1

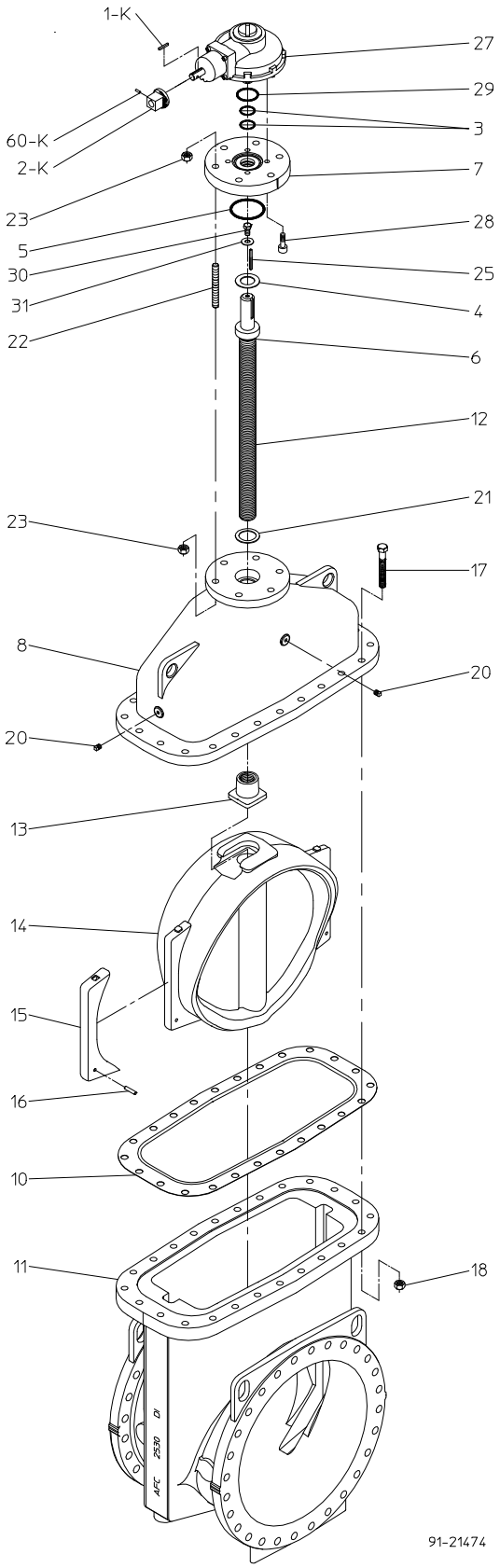

SERIES 2500 - TAPPING VALVE W/BEVEL GEARING PARTS LIST, 42” & 48” SIZES

Ref No.	Description	Material	Qty. Series 2500 42”	Qty. Series 2500 48”
1-K	Key 14 mm x 9 mm x 54 mm	Steel	1	1
2-K	Operating Nut, 2” Square	Ductile Iron	1	1
3	O-ring	Rubber	2	2
4	Upper Thrust Washer	Delrin	1	1
5	Stuffing Box Gasket	Rubber O-ring	1	1
6	O-ring	Rubber	1	1
7	Stuffing Box	Ductile Iron	1	1
8	Bonnet	Ductile Iron	1	1
10	Bonnet Gasket	EPDM Rubber	1	1
11	Body	Ductile Iron	1	1
12	Stem	Bronze	1	1
		Stainless Steel (Optional)		
12	Stem	Stainless Steel	-	-
13	Wedge Nut	Bronze	1	1
14	Resilient Wedge	Ductile Iron, Coated with EPDM Rubber	1	1
15	Wedge Cover	Polymer	2	2
16	Wedge Cover Pin	Polymer	2	2
17	Hex Head Bolt, 1-1/4-7 x 7-1/2”	Stainless Steel	32	-
17	Hex Head Bolt, 1-3/8-6 x 8-1/2”	Stainless Steel	-	36
18	Hex Nut, 1-1/4-7	Stainless Steel	32	-
18	Hex Nut, 1-3/8-6	Stainless Steel	-	36
20	Pipe Plug, 1/2 NPT	Stainless Steel	4	4
21	Lower Thrust Washer	Delrin	1	1
22	Stud, 1-1/4-7 x 7-1/2”	Stainless Steel	8	-
22	Stud, 1-1/4-7 x 7-3/4”	Stainless Steel	-	8
23	Hex Nut, 1-1/4-7	Stainless Steel	16	16
25	Square Key, 3/4 x 4-1/2	Hardened Steel	1	1
27	Bevel Gear Operator 8:1	Rotork IB12	1	1
28	Socket Head Cap Screw 3/4-10 x 2-1/2”	Stainless Steel	8	8
29	Actuator Gasket	Rubber O-ring	1	1
30	Hex Head Bolt, 7/8-9 x 1-1/2”	Zinc Plated Steel	1	1
31	Washer	Steel	1	1
50-K	Set Screw 5/16-18 x 3/4”	Stainless Steel	1	1

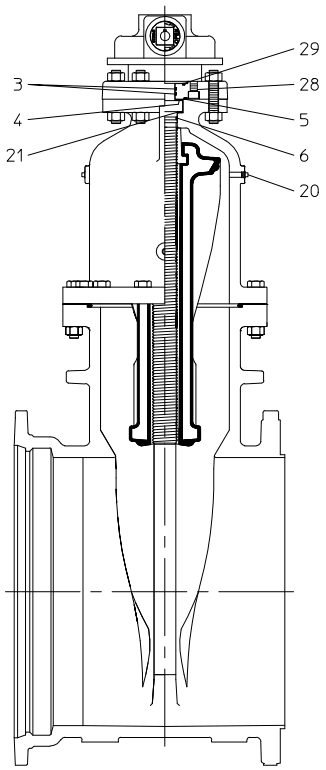

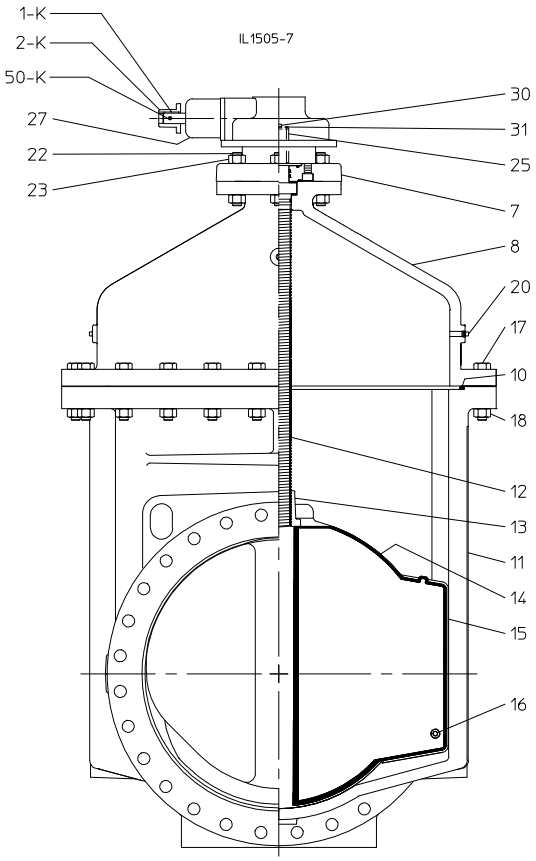

Tapping valves shall be resilient wedge type with bodies and bonnets made of ductile iron for 250 psig working pressure.

- The alignment ring dimensions of the tapping valve flange conform to MSS SP 60 to help ensure true alignment of the valve with the tapping sleeve. The outlet end of the valve shall have the desired joint connection for the intended pipe.
- All tapping valves shall include a minimum 3/8 in. NPT pipe plug on the bonnet of the valve body to aid in the field testing of the valve.
- All wedges shall be fully encapsulated with EPDM rubber.
- All wedges shall be provided with guide covers.
- All interior and exterior ferrous surfaces shall be protected against corrosion by fusion-bonded epoxy coating. The coating shall be applied prior to assembly to assure coverage of all exposed areas, including bolt holes.
- Tapping valve shall be AMERICAN Flow Control's **4 in.–48 in. Series 2500** Ductile Iron 250 psig rating (accepts full size shell cutter).

AMERICAN Flow Control

SECTION 6

TAPPING SLEEVES

Series 2800 Ductile Iron Tapping Sleeves **6A-1 through 6A-20**

AMERICAN

FLOW CONTROL

THE RIGHT WAY

INDEX

SERIES 2800 TAPPING SLEEVES

PAGE

INTRODUCTION 6A-2

FEATURES AND SPECIFICATIONS 6A-3

ORDERING

Dimensions:

Series 2800-C (4” - 12” & 16” Sizes) 6A-4, 6A-5

Series 2800-C (16” x 16” Size) 6A-6, 6A-7

Series 2800-C (14” & 18” - 24” Sizes) 6A-8, 6A-9

Series 2800-A (4” - 12” Sizes) 6A-10, 6A-11

Weights:

Series 2800 ..... 6A-12

Submittal Sheet 6A-13

INSTALLATION

Series 2800 ..... 6A-14, 6A-15, 6A-16

REPAIRS

Parts Lists:

Series 2800-C (4”–12” & 16” Sizes) 6A-17

Series 2800-C (16” x 16” Size) 6A-18

Series 2800-C (14” & 18” - 24” Sizes) 6A-19

Series 2800-A (4”–12” Sizes) 6A-20

TAPPING SLEEVES

AMERICAN Flow Control offers ductile iron tapping sleeves in sizes 4 in. x 4 in. - 24 in. x 24 in. AMERICAN Flow Control tapping sleeves are designed to provide a safe, efficient means of connecting branch piping to existing lines.

Features

AMERICAN Flow Control offers ductile iron tapping sleeves in sizes 4 in. x 4 in. - 24 in. x 24 in.

AMERICAN Flow Control tapping sleeves are designed to provide a safe, efficient means of connecting branch piping to existing lines.

Tapping Sleeves

The Series 2800 Compact Ductile Iron Tapping Sleeves are available in sizes 4 in. x 4 in.–24 in. x 24 in. with mechanical joint ends for use on ductile iron pipe and 4 in. x 4 in.–12 in. x 12 in. for use on Asbestos Cement (A-C) pipe.

The Series 2800 sleeves feature full length, heavy duty, ductile iron construction. Their compact construction makes them lighter and easier to handle. Since they are made of ductile iron, they have twice the strength of gray iron sleeves.

Specifications

Tapping sleeves shall be made of ductile iron meeting material standard ASTM A536. Side flange seals shall be of the O-ring type of either round, oval or rectangular cross-sectional shape.

Sizes 12 in. and smaller must be capable of working on Class A,B,C or D pipe diameters without changing either half of sleeve.

All sleeves are to include the end joint accessories and split glands necessary to assemble sleeve to pipe. No special tools to be required other than a standard socket wrench.

SERIES 2800-C DIMENSIONS, 4”–12” & 16” SIZES FOR USE WITH GRAY IRON OR DUCTILE IRON PIPE

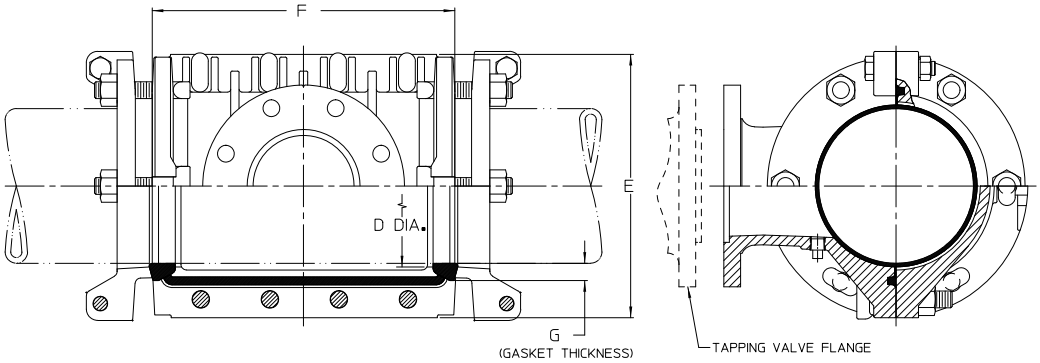

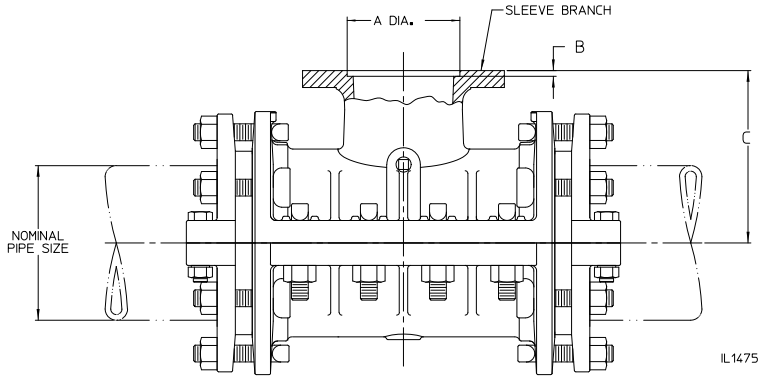

Identification Marking on Sleeve

Sleeve Size

6 x 4

- Branch Size
- Pipe Size

Sleeve Model No.

28 06 - C

- Designed for use with Gray Iron or Ductile Iron
- Nominal Pier Size Sleeve Will Fit
- Series 2800 Ductile Iron Tapping Sleeve

Sleeve Size (Pipe x Branch)	4x4	6x4	6X6	8X4	8X6	8X8	10X4	10X6	10x8	10x10
A Diameter (+.031 -.000)	5.016	5.016	7.016	5.016	7.016	9.016	5.016	7.016	9.016	11.016
B	.25	.25	.31	.25	.31	.31	.25	.31	.31	.31
C	6.38	7.75	7.88	9.00	9.06	9.00	10.38	10.63	10.88	10.88
D Diameter	5.13	7.22	7.22	9.44	9.44	9.44	11.53	11.53	11.53	11.53
E	9.63	11.75	11.75	13.88	13.88	13.88	16.63	16.63	16.63	16.63
F	10.88	13.50	13.50	15.00	15.00	15.00	16.75	16.75	16.75	16.75

Sleeve Size (Pipe x Branch)	12x4	12X6	12X8	12X10	12X12	16X4	16X6	16X8	16X10	16X12
A Diameter (+.031 -.000)	5.016	7.016	9.016	11.016	13.016	5.016	7.016	9.016	11.016	13.016
B	.25	.31	.31	.31	.31	.25	.31	.31	.31	.31
C	11.38	11.63	11.88	11.94	12.88	13.63	14.13	14.50	14.88	14.88
D Diameter	13.63	13.63	13.63	13.63	13.63	17.97	17.97	17.97	17.97	17.97
E	18.50	18.50	18.50	18.50	18.50	23.50	23.50	23.50	23.50	23.50
F	19.50	19.50	19.50	19.50	19.50	22.50	22.50	22.50	22.50	22.50

G (Gasket Thickness) - Two 3/4 in. thick gaskets that fit ductile iron and centrifugally cast gray iron pipe are supplied as standard. Two 5/8 in. thick gaskets should be used for pit cast pipe. If there is a doubt about which type of pipe the sleeve will be used with, order 5/8 in. thick gaskets in addition to the 3/4 in. thick gaskets that are furnished as standard. See table on next page for the range of pipe sizes with which each gasket can be used.

NOTES:

1. 250 psig rated working pressure.
2. Flange pilot dimensions (A & B) are in accordance with MSS SP-60.

SERIES 2800-C DIMENSIONS, 4”–12” & 16” SIZES FOR USE WITH GRAY IRON OR DUCTILE IRON PIPE

Two 3/4 in. thick gaskets which fit ductile iron and centrifugally cast gray iron pipe are supplied as standard. Two 5/8 in. thick gaskets should be used for pit cast pipe.

If there is doubt about which type of pipe the sleeve will be used with, order 5/8 in. thick gaskets in addition to the 3/4 in. thick gaskets that are furnished as standard. The following tables list the range of pipe sizes with which each size gasket can be used.

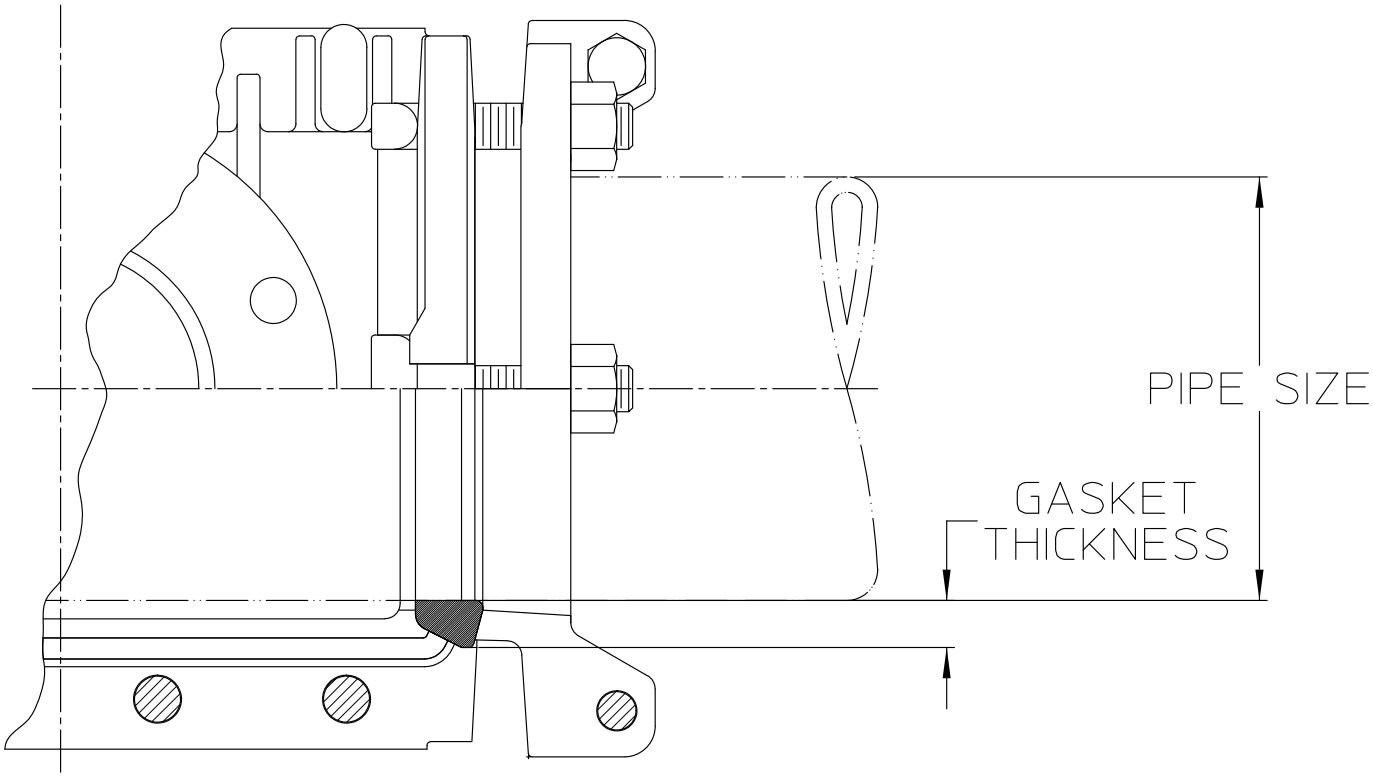

IL1475-2

Nominal Pipe Size	3/4 in. Thick Gasket				5/8 in. Thick Gasket			
	Diameter		Circumference		Diameter		Circumference	
	Minimum	Maximum	Minimum	Maximum	Minimum	Maximum	Minimum	Maximum
4”	4.74	4.86	14.88	15.25	4.86	5.06	15.25	15.88
6”	6.84	6.96	21.50	21.88	6.96	7.16	21.88	22.50
8”	8.99	9.11	28.25	28.62	9.11	9.37	28.62	29.44
10”	11.04	11.16	34.69	35.06	11.16	11.44	35.06	35.31
12”	13.14	13.26	41.31	41.69	13.26	13.53	41.69	42.50
16”	17.34	17.46	54.50	54.88	17.46	17.87	54.88	56.12

SERIES 2800-C DIMENSIONS, 16”x16” SIZE
FOR USE WITH GRAY IRON OR DUCTILE IRON PIPE

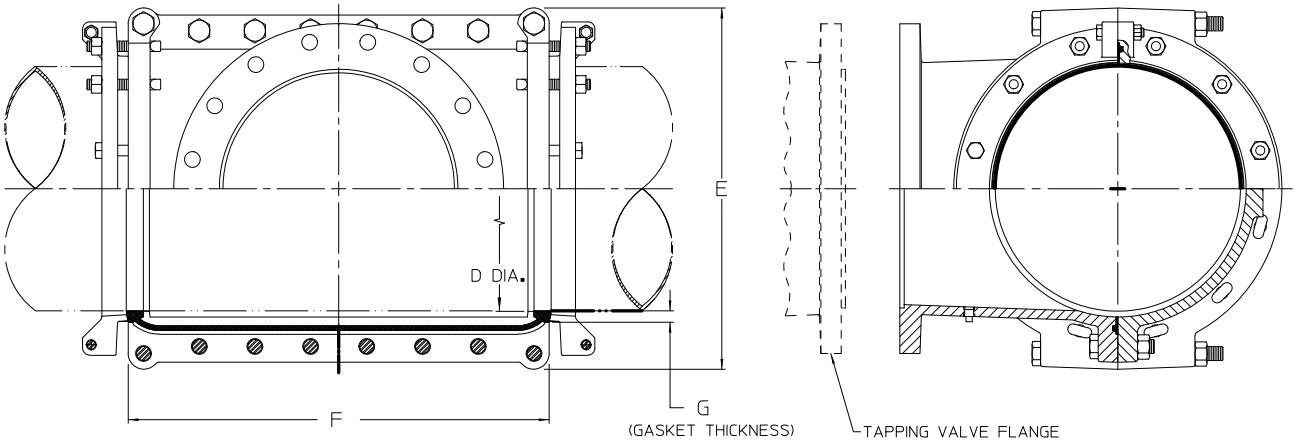

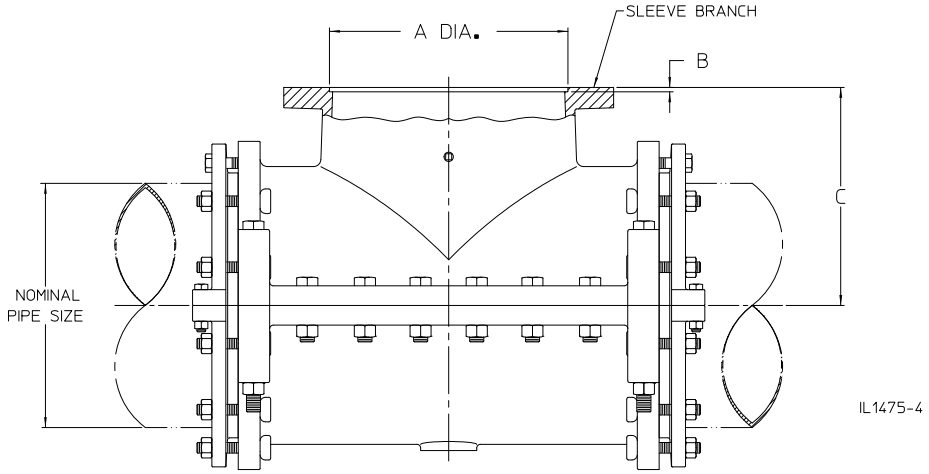

Identification Marking on Sleeve

Sleeve Size

16 x 16

- Branch Size
- Pipe Size

Sleeve Model No.

28 16 - C

- Designed for use with Gray Iron or Ductile Iron
- Nominal Pier Size Sleeve Will Fit
- Series 2800 Ductile Iron Tapping Sleeve

Sleeve Size (Pipe x Branch)	16x16
A Diameter (+.031 -.000)	17.020
B	.31
C	15.50
D Diameter	17.97
E	25.75
F	30.00

G (Gasket Thickness) - Two 3/4 in. thick gaskets which fit ductile iron and centrifugally cast gray iron pipe are supplied as standard. Two 5/8 in. thick gaskets should be used for pit cast pipe. If there is a doubt about which type of pipe the sleeve will be used with, order 5/8 in. thick gaskets in addition to the 3/4 in. thick gaskets that are furnished as standard. See table below for the range of pipe sizes with which each gasket can be used.

NOTES:

1. 250 psig rated working pressure.
2. Flange pilot dimensions (A & B) are in accordance with MSS SP-60.

SERIES 2800-C DIMENSIONS, 16”x16” SIZE
FOR USE WITH GRAY IRON OR DUCTILE IRON PIPE

Two 3/4 in. thick gaskets that fit ductile iron and centrifugally cast gray iron pipe are supplied as standard. Two 5/8 in. thick gaskets should be used for pit cast pipe.

If there is doubt about which type of pipe the sleeve will be used with, order 5/8 in. thick gaskets in addition to the 3/4 in. thick gaskets that are furnished as standard. The following tables list the range of pipe sizes with which each size gasket can be used.

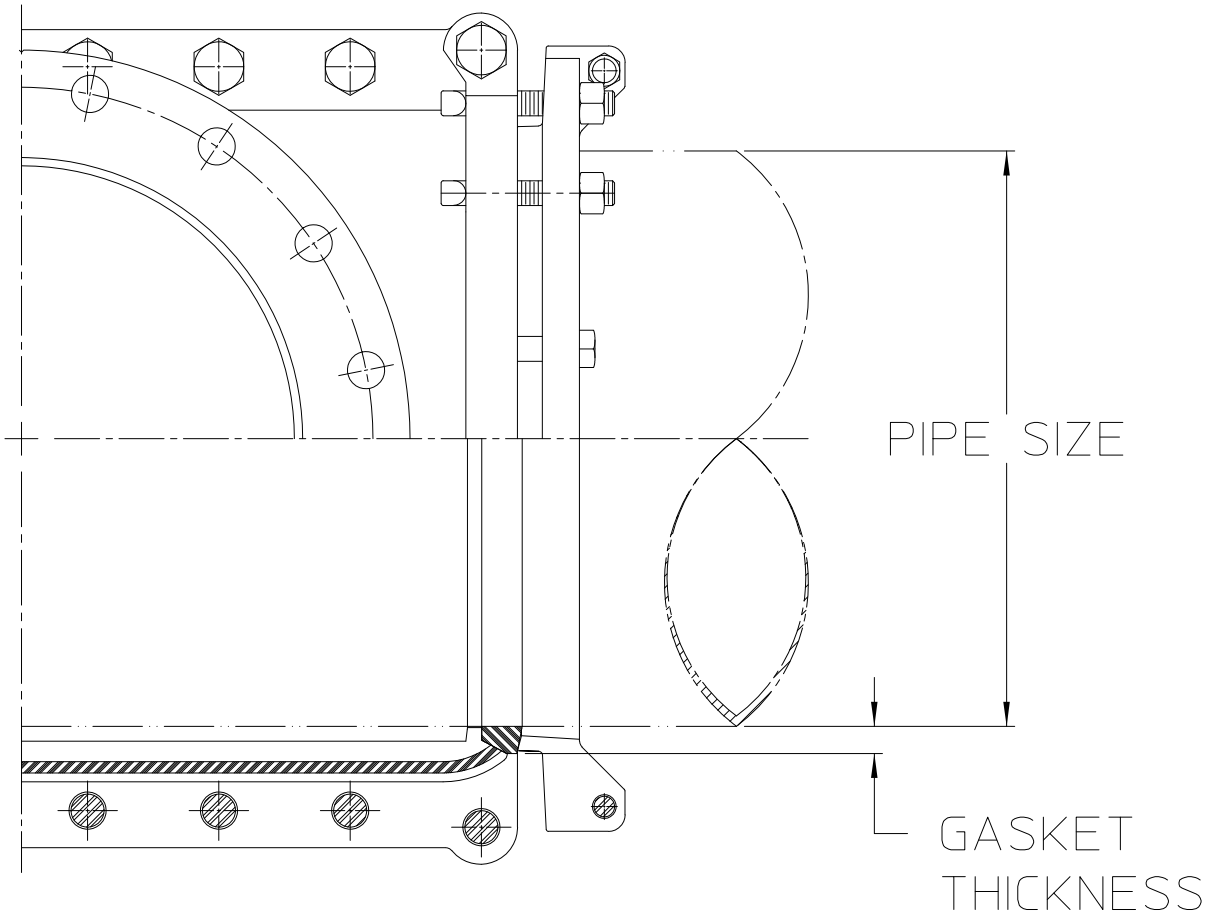

IL1475-5

Nominal Pipe Size	3/4 in. Thick Gasket				5/8 in. Thick Gasket			
	Diameter		Circumference		Diameter		Circumference	
	Minimum	Maximum	Minimum	Maximum	Minimum	Maximum	Minimum	Maximum
16”	17.34	17.46	54.50	54.88	17.46	17.87	54.88	56.12

SERIES 2800-C DIMENSIONS, 14" & 18"– 24" SIZES
FOR USE WITH GRAY IRON OR DUCTILE IRON PIPE

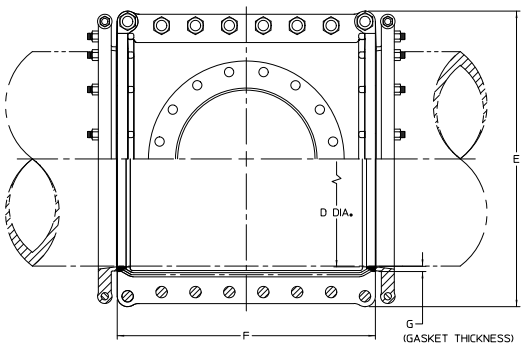

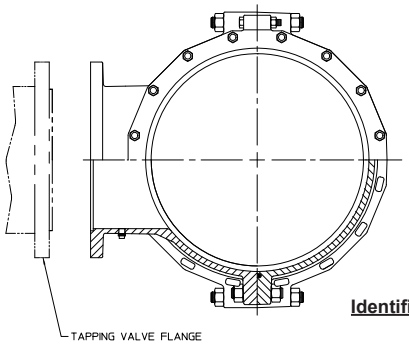

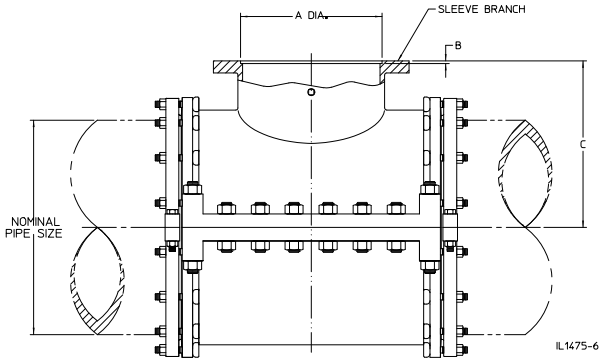

Identification Marking on Sleeve

Sleeve Size

14 x 4

- Branch Size
- Pipe Size

Sleeve Model No.

28 14 - C

- Designed for use with Gray Iron or Ductile Iron
- Nominal Pier Size Sleeve Will Fit
- Series 2800 Ductile Iron Tapping Sleeve

Sleeve Size (Pipe x Branch)	14x4	14x6	14X8	14X10	14X12	14X14	18X4	18X6	18X8	18x10	18x12
A Diameter (+.031 -.000)	5.016	7.016	9.016	11.016	13.016	15.016	5.016	7.016	9.016	11.016	13.016
B	.25	.31	.31	.31	.31	.31	.25	.31	.31	.31	.31
C	13.50	13.50	13.50	13.50	13.50	13.50	15.50	15.50	15.50	15.50	16.00
D Diameter	15.44	15.44	15.44	15.44	15.44	15.44	19.63	19.63	19.63	19.63	19.63
E	23.00	23.00	23.00	23.00	23.00	23.00	28.00	28.00	28.00	28.00	28.00
F	24.00	24.00	24.00	24.00	27.00	27.00	18.00	18.00	24.00	24.00	24.00

Sleeve Size (Pipe x Branch)	18x14	18x16	18X18	20X4	20X6	20X8	20X10	20X12	20X14	20x16	20x18
A Diameter (+.031 -.000)	15.016	17.016	19.016	5.016	7.016	9.016	11.016	13.016	15.016	17.016	19.016
B	.31	.31	.31	.25	.31	.31	.31	.31	.31	.31	.31
C	16.00	16.00	16.00	17.25	17.25	17.25	17.25	17.25	17.75	17.75	17.75
D Diameter	19.63	19.63	19.63	21.75	21.75	21.75	21.75	21.75	21.75	21.75	21.75
E	28.00	28.00	28.00	30.25	30.25	30.25	30.25	30.25	30.25	30.25	30.25
F	31.00	31.00	31.00	24.00	24.00	24.00	24.00	30.00	30.00	30.00	34.00

Sleeve Size (Pipe x Branch)	20x20	24x4	24X6	24X8	24X10	24X12	24X14	26X16	24X18	24x20	24x24
A Diameter (+.031 -.000)	21.016	5.016	7.016	9.016	11.016	13.016	15.016	17.016	19.016	21.016	25.016
B	.31	.25	.31	.31	.31	.31	.31	.31	.31	.31	.31
C	17.75	19.00	19.00	19.00	19.00	19.00	19.00	20.00	20.00	20.00	20.00
D Diameter	21.75	25.94	25.94	25.94	25.94	25.94	25.94	25.94	25.94	25.94	25.94
E	30.25	35.50	35.50	35.50	35.50	35.50	35.50	35.50	35.50	35.50	35.50
F	34.00	18.00	18.00	25.00	25.00	25.00	31.00	31.00	31.00	38.00	38.00

G (Gasket Thickness) - Two 3/4 in. thick gaskets that fit ductile iron and centrifugally cast gray iron pipe are supplied as standard. See next page for the minimum and maximum allowable pipe sizes.

NOTES:

1. 250 psig rated working pressure.
2. Flange pilot dimensions (A & B) are in accordance with MSS SP-60.

SERIES 2800-C DIMENSIONS, 14” & 18”–24” SIZES FOR USE WITH GRAY IRON OR DUCTILE IRON PIPE

Two 3/4in. thick gaskets which fit ductile iron and centrifugally cast gray iron pipe are supplied as standard.

The following table shows the minimum and maximum allowable pipe sizes.

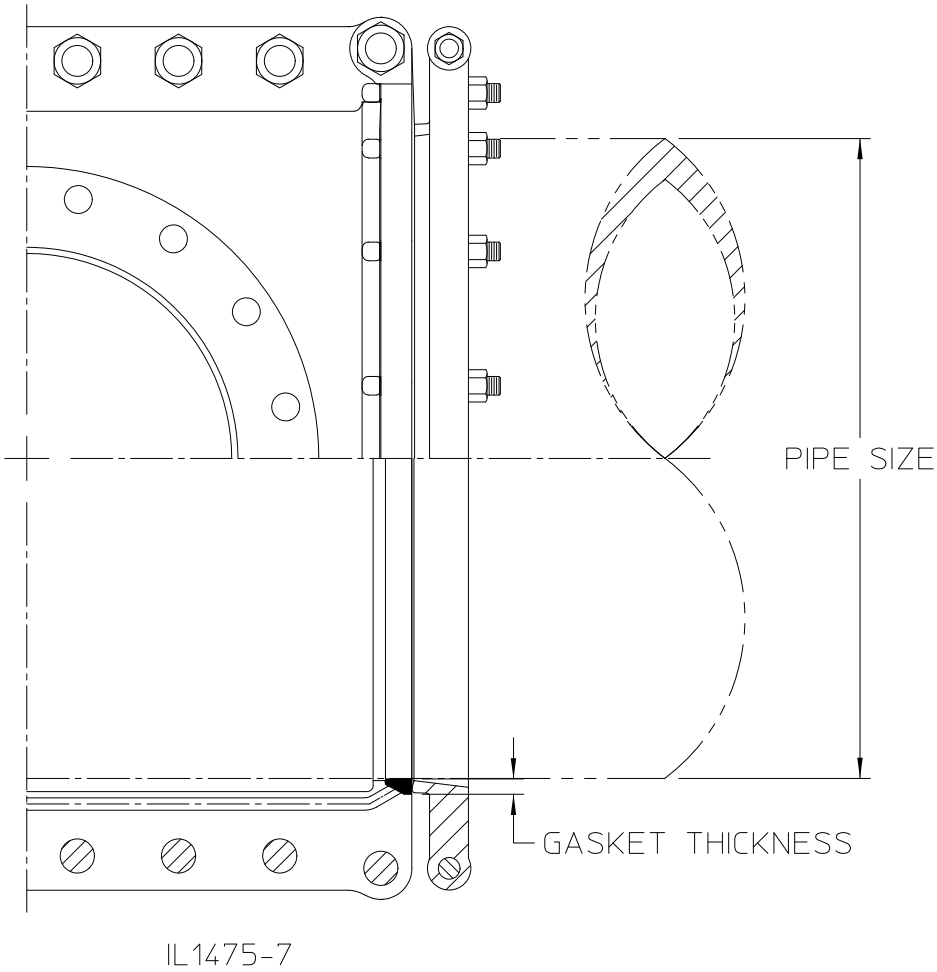

Nominal Pipe Size	3/4 in. Thick Gasket			
	Diameter		Circumference	
	Minimum	Maximum	Minimum	Maximum
14”	15.24	15.36	47.88	48.25
18”	19.44	19.56	61.07	61.45
20”	21.54	21.66	67.67	68.05
24”	25.74	25.86	80.86	81.24

SERIES 2800-A DIMENSIONS, 4”–12” SIZES
FOR USE WITH ASBESTOS-CEMENT (A-C) PIPE

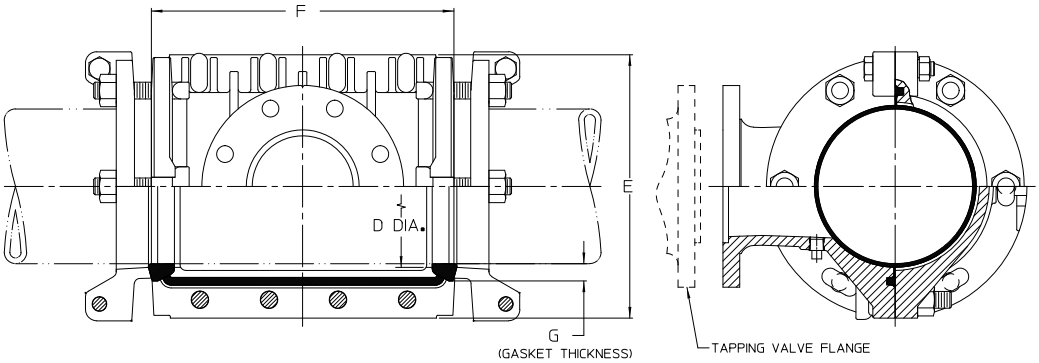

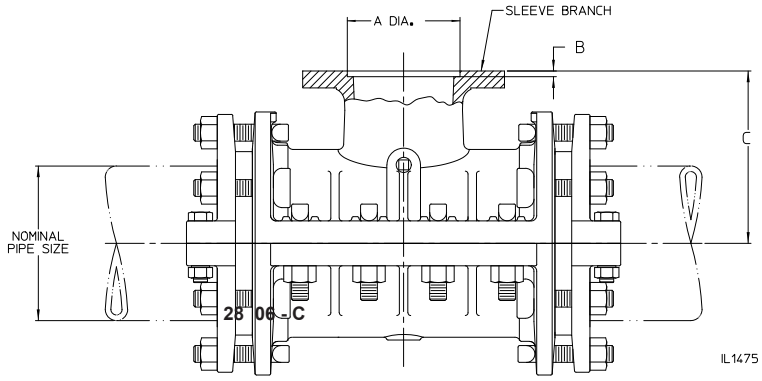

Identification Marking on Sleeve

Sleeve Size

6 x 4

Branch Size

Pipe Size

Sleeve Model No.

28 06 - C

Designed for use with Asbestos-Cement (A-C) Pipe

Nominal Pier Size Sleeve Will Fit

Series 2800 Ductile Iron Tapping Sleeve

Sleeve Size (Pipe x Branch)	4x4	6x4	6X6	8X4	8X6	8X8	10X4	10X6	10x8	10x10	12x4	12x6	12x8	12x10	12x12
A Diameter (+.031 -.000)	5.016	5.016	7.016	5.016	7.016	9.016	5.016	7.016	9.016	11.016	5.016	7.016	9.016	11.016	13.016
B	.25	.25	.31	.25	.31	.31	.25	.31	.31	.31	.31	.31	.31	.31	.31
C	6.62	7.88	8.00	9.12	9.25	9.25	10.62	10.88	11.12	11.12	11.75	12.00	12.31	12.38	13.25
D Diameter	5.59	7.62	7.62	9.81	9.81	9/81	12.12	12.12	12.12	12.12	14.53	14.53	14.53	14.53	14.53
E	9.88	12.12	12.12	14.25	14.25	14.25	17.00	17.00	17.00	17.00	19.25	19.25	19.25	19.25	19.25
F	10.88	13.50	13.50	15.00	15.00	15.00	16.88	16.88	16.88	16.88	19.50	19.50	19.50	19.50	19.50

G (Gasket Thickness) - Two duck tip (3/4 in. thick) and two plain tip (5/8 in. thick) MJ end gaskets are supplied with each sleeve. See next page for range of pipe sizes each type will fit.

NOTES:

1. 200 psig rated working pressure.
2. Flange pilot dimensions (A & B) are in accordance with MSS SP-60.

SERIES 2800-A DIMENSIONS, 4”–12” SIZES FOR USE WITH ASBESTOS-CEMENT (A-C) PIPE

Two 3/4 in. thick duck tip and two 5/8 in. thick plain tip MJ end gaskets are supplied with each sleeve. The A-C pipe is to be measured to determine which size gasket is used in the installation.

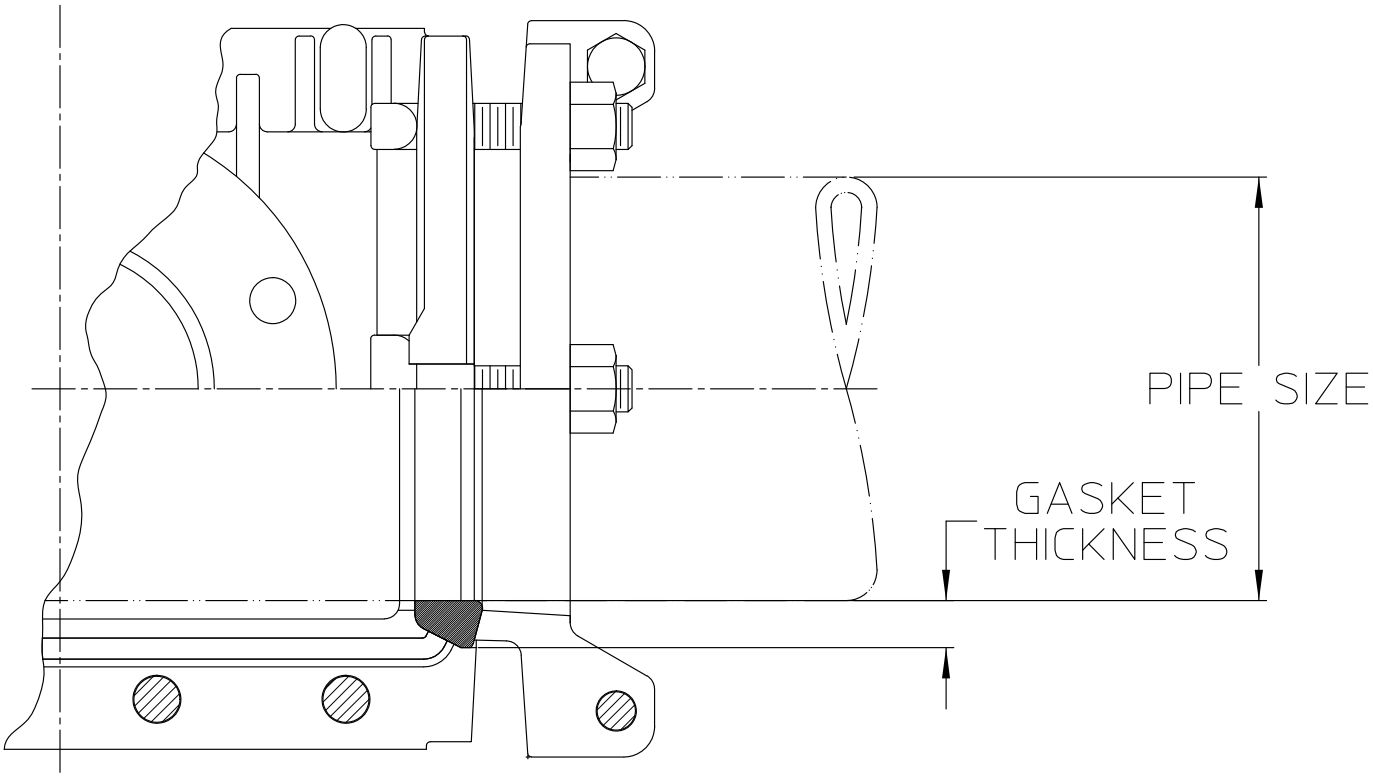

IL1475-2

Nominal Pipe Size	3/4 in. Thick Duck Tip Gasket				5/8 in. Thick Plain Gasket			
	Diameter		Circumference		Diameter		Circumference	
	Minimum	Maximum	Minimum	Maximum	Minimum	Maximum	Minimum	Maximum
4”	4.97	5.30	15.62	16.62	5.30	5.57	16.62	17.50
6”	7.05	7.29	22.12	22.94	7.29	7.60	22.94	23.88
8”	9.22	9.54	29.00	30.00	9.54	9.77	30.00	30.62
10”	11.40	11.90	35.81	37.38	11.90	12.10	37.38	38.06
12”	13.90	14.25	43.69	44.75	14.25	14.50	44.75	45.56

SERIES 2800 - WEIGHTS

NOTE: All weights are in pounds.

Size (Inches)	2800-C for CI	2800-A for A-C
4 x 4	101	106
6 x 4	140	144
6 x 6	144	148
8 x 4	154	160
8 x 6	156	166
8 x 8	165	174
10 x 4	238	257
10 x 6	246	262
10 x 8	255	267
10 x 10	262	276
12 x 4	267	284
12 x 6	271	288
12 x 8	279	293
12 x 10	290	305
12 x 12	301	315
14 x 4	480	-
14 x 6	485	-
14 x 8	495	-
14 x 10	600	-
14 x 12	625	-
14 x 14	645	-
16 x 4	560	-
16 x 6	565	-
16 x 8	580	-
16 x 10	705	-
16 x 12	725	-
16 x 16	751	-
18 x 4	660	-
18 x 6	665	-
18 x 8	675	-
18 x 10	810	-
18 x 12	835	-
18 x 14	940	-
18 x 16	980	-
18 x 18	1010	-

Size (Inches)	2800-C for CI	2800-A for A-C
20 x 4	666	-
20 x 6	671	-
20 x 8	680	-
20 x 10	809	-
20 x 12	824	-
20 x 16	842	-
20 x 18	922	-
20 x 20	950	-
24 x 4	715	-
24 x 6	721	-
24 x 8	880	-
24 x 10	888	-
24 x 12	904	-
24 x 14	1052	-
24 x 16	1075	-
24 x 18	1086	-
24 x 20	1263	-
24 x 24	1312	-

AMERICAN Flow Control

SERIES 2800 TAPPING SLEEVES

SUBMITTAL SHEET

Sleeve Type							
Series 2800-C for Gray Iron or Ductile Iron Pipe					Series 2800-A for Asbestos Cement (A-C Pipe)		
Qty	Pipe Size	Branch Size	Extra 5/8 in. Thick Gaskets for Pit Cast Pipe		Qty	Pipe Size	Branch Size
			Yes	No			

AMERICAN Flow Control
American-Darling Valve and Waterous
A Division of AMERICAN

NOTES:

1. Series 2800-C: 250 psig rated working pressure. Series 2800-A: 200 psig rated working pressure.
2. Series 2800-C sleeves through 16in. are furnished with two 3/4in. thick gaskets which fit ductile iron and centrifugally cast gray iron pipe. Two additional 5/8in. thick gaskets may be ordered which will fit pit cast pipe. Refer to 2800-C literature for pipe size ranges which require 5/8in. thick gaskets.
3. Series 2800-A sleeves are furnished with both 3/4in. and 5/8in. thick gaskets to fit all sizes of A-C pipe. See 2800-A literature for pipe size ranges that require each size gasket.
4. See separate submittal sheet for tapping valves.

Visit our website at http://www.american-usa.com/afc

Inspection on Delivery

When the shipment arrives, check for shortages or damage.

Any damage or shortage should be reported immediately to the trucker noted on the bill of lading and signed by the driver on your copy.

Carefully unload all tapping sleeves and valves. **DO NOT DROP.**

Check the tapping sleeve pipe size, branch size, specified pipe (A-C, Series 2800-A or iron, Series 2800-C sleeve) and quantity against order specifications. Also check the tapping valve to be sure it conforms to proper specification.

Storage

When possible, keep the tapping sleeves and valves out of the weather. If stored outside, cover with a waterproof covering.

In cold climates, keep the inside of the tapping sleeves or valves drained of any water to prevent freezing.

Mechanical Joint End Gaskets

Series 2800-C Sleeve for Iron Pipe

AFC Series 2800-C mechanical joint tapping sleeves can be used with ductile iron, centrifugally cast gray iron or pit cast pipe. For A-C pipe, use an A-C tapping sleeve.

3/4in. thick gaskets are required for ductile iron or centrifugally cast gray iron pipe.

5/8in. thick gaskets are required for pit cast pipe.

Unless the order specifies otherwise, sleeves are furnished with 3/4 in. thick gaskets. Where doubt exists concerning the type of pipe, we suggest ordering extra gaskets of 5/8 in. thickness. See next page for range of pipe sizes with which each size gasket can be used.

Series 2800-A Sleeve for Asbestos-Cement (A-C) Pipe

AFC Series 2800-A mechanical joint tapping sleeves are for use with A-C pipe. Use 3/4 in. thick or 5/8 in. thick gaskets based on the size of pipe sleeve is used on. For iron pipe, use an iron pipe tapping sleeve. See next page for range of pipe sizes with which each size gasket can be used.

Installation

1. Clean the pipe surface thoroughly to permit a good seal under the end gaskets.
2. Measure pipe O.D. or circumference to be sure of proper gasket size. See tables below:

Iron Pipe Size Ranges

Nominal Pipe Size	3/4" Thick Gasket				5/8" Thick Gasket			
	Diameter		Circumference		Diameter		Circumference	
	Minimum	Maximum	Minimum	Maximum	Minimum	Maximum	Minimum	Maximum
4"	4.74	4.86	14.88	15.25	4.86	5.06	15.25	15.88
6"	6.84	6.96	21.50	21.88	6.96	7.16	21.88	22.50
8"	8.99	9.11	28.25	28.62	9.11	9.37	28.62	29.44
10"	11.04	11.16	34.69	35.06	11.16	11.44	35.06	35.31
12"	13.14	13.26	41.31	41.69	13.26	13.53	41.69	42.50
14"	15.24	15.36	47.88	48.25	-	-	-	-
16"	17.34	17.46	54.50	54.88	17.46	17.87	54.88	56.12
18"	19.44	19.56	61.07	61.45	-	-	-	-
20"	21.54	21.66	67.67	68.05	-	-	-	-
24"	25.74	25.86	80.86	81.24	-	-	-	-

Asbestos-Cement (A-C) Pipe Size Ranges

Nominal Pipe Size	3/4" Thick Duck Tip Gasket				5/8" Thick Plain Gasket			
	Diameter		Circumference		Diameter		Circumference	
	Minimum	Maximum	Minimum	Maximum	Minimum	Maximum	Minimum	Maximum
4"	4.97	5.30	15.62	16.62	5.30	5.57	16.62	17.50
6"	7.05	7.29	22.12	22.94	7.29	7.60	22.94	23.88
8"	9.22	9.54	29.00	30.00	9.54	9.77	30.00	30.62
10"	11.40	11.90	35.81	37.38	11.90	12.10	37.38	38.06
12"	13.90	14.25	43.69	44.75	14.25	14.50	44.75	45.56

3. Bolt the sleeve together on the pipe, making sure the inside surfaces of the MJ bell line up at the split line. Tighten the side bolts evenly, working from the center to the ends. After the side bolts are tightened, trim the protruding ends of the side gaskets so they are flush or protruding up to 1/16 in. past the iron surface.
4. Rotate sleeve to desired position.
5. Insert correct end gaskets and check to make sure the beveled ends are lapped together evenly and fit inside the MJ bell. End gasket joint should be located away from the split line of the sleeve. No trimming of end gaskets should be necessary.
6. Lubricate the socket, gasket and pipe O.D. with soapy water or an approved pipe lubricant meeting requirements of AWWA C111.
7. Bolt split glands together, position against gaskets and install bolts. Tighten the bolts alternately (opposite sides) until all are evenly tight. For best results, 90 ft-lbs of bolt torque is recommended.
8. AMERICAN recommends the use of AMERICAN Flow Control Series 2500 tapping valves. Please refer to Section 5A of the AMERICAN Valve and Hydrant Manual for tapping valve installation instructions. In cases where other tapping valve manufacturers are used, please contact that manufacturer for specific tapping valve installation and testing instructions. Applicable tapping sleeve dimensions should be in compliance with the Standard Practice as defined in MSS SP-60. AMERICAN will not be responsible for claims, errors or omissions in documentation provided by other manufacturers.
9. Place the gasket on the tapping valve and bolt the valve to the sleeve. After the valve is bolted securely in place, open the valve fully and observe that the resilient wedge is clear of the waterway. Close the valve completely.

   Install proper blocking under the valve and behind the sleeve to carry the pipe thrust.
10. Prior to making the tap, test the tapping valve and sleeve as a complete unit by connecting the test pressure to the tap located on the back of the tapping sleeve. **Always test with water.** Test pressure must not exceed the rated working pressure (Series 2800-C: 250 psig and Series 2800-A: 200 psig) of the sleeve and tapping valve. This will point out any leaks or other problems if the sleeve has not been properly installed. Any leaks or other problems must be remedied before the pipe is drilled out. If the sleeve has no test plug, test the sleeve and valve assembly through the test plug in the valve bonnet with the wedge in the open position.

WARNING: USE ONLY WATER TO TEST TAPPING SLEEVE AND TAPPING VALVE ASSEMBLY. UNDER NO CIRCUMSTANCES SHOULD AIR EVER BE USED TO CONDUCT THIS TEST. TESTING WITH AIR MAY RESULT IN SERIOUS INJURY OR DEATH.

11. Attach the tapping machine to the valve, making sure the machine is centered and square with the end of the valve to assure straight travel of the cutter through the valve. With the tapping machine attached and the cutter fully retracted, check to be sure the valve can be closed completely, then open the valve fully.
12. Final check before boring: Open the valve fully. Make sure the cutter does not damage the gate or seats of the valve (or touch any interior surface of the resilient wedge tapping valve). If any resistance is felt when hand feeding the cutter into position, stop and correct before making the tap.

SERIES 2800-C PARTS LIST, 4”–12” & 16” SIZES
FOR USE WITH GRAY IRON OR DUCTILE IRON PIPE

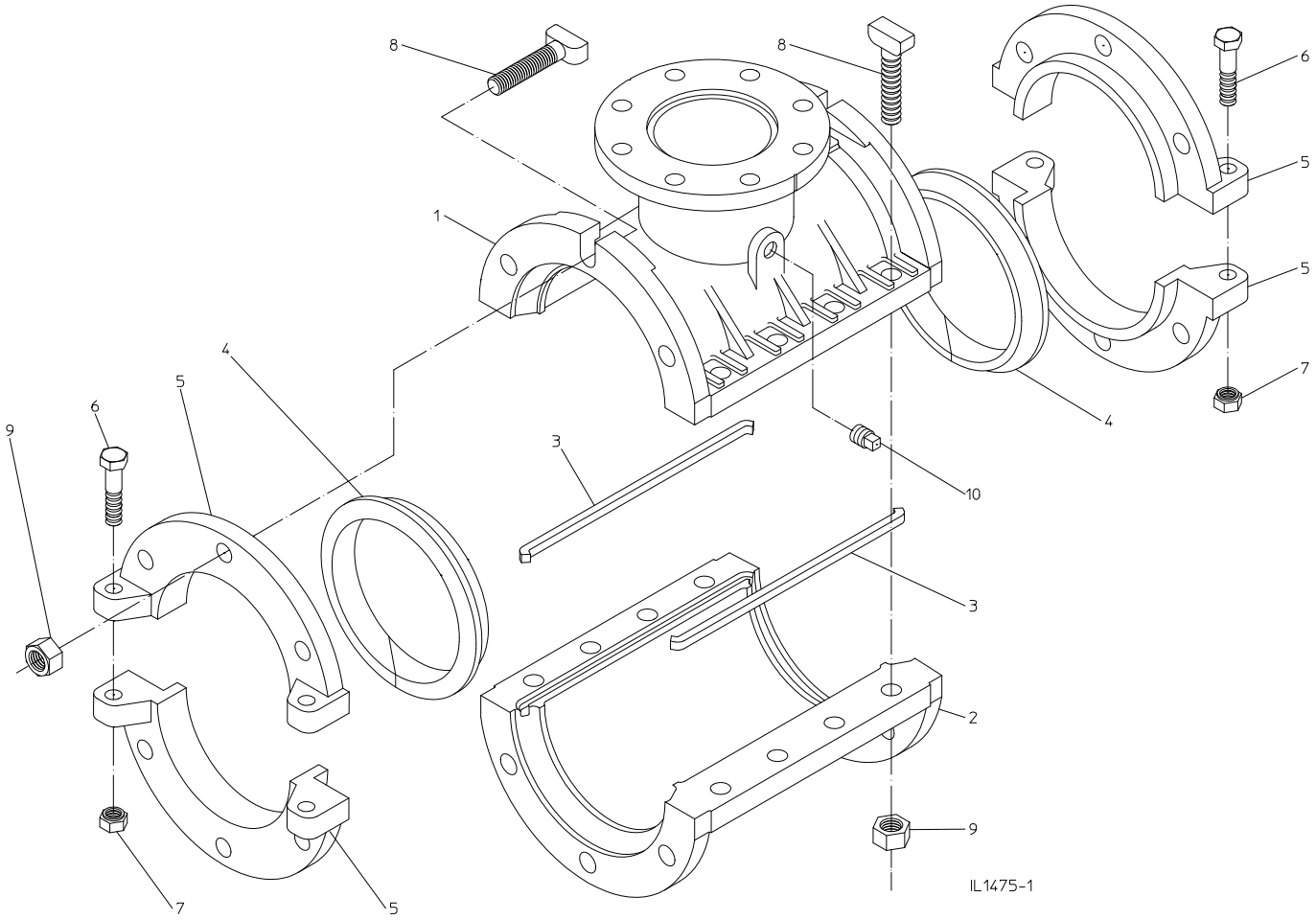

Ref No.	Description	Material	Quantity					
			4”	6”	8”	10”	12”	16”
1	Tapping Sleeve Front	Ductile Iron ASTM A536 Grade 65-45-12	1	1	1	1	1	1
2	Tapping Sleeve Back	Ductile Iron ASTM A536 Grade 65-45-12	1	1	1	1	1	1
3	MJ Side Gasket	Rubber	2	2	2	2	2	2
4	MJ End Gasket	Rubber	2	2	2	2	2	2
5	MJ Split Gland Half	Ductile Iron ASTM A536 Grade 65-45-12	4	4	4	4	4	4
6	Hex Head Bolt, 5/8” - 11 x 2 3/4”	Zinc Plated Steel	4	4	-	4	-	-
6	Hex Head Bolt, 5/8” - 11 x 3”	Zinc Plated Steel	-	-	-	-	-	4
6	Hex Head Bolt, 1/2” - 12 x 3 1/2”	Zinc Plated Steel	-	-	-	-	4	-
6	Hex Head Bolt, 1/2” - 13 x 3”	Zinc Plated Steel	-	-	4	-	-	-
7	Hex Nut, 5/8” - 11	Zinc Plated Steel	4	4	-	4	-	4
7	Hex Nut, 1/2” - 13	Zinc Plated Steel	-	-	4	-	4	-
8	T-Head Bolt, 3/4” - 10	Cor-Ten Steel	14	20	20	26	26	38
9	T-Head Nut, 3/4” - 10	Cor-Ten Steel	14	20	20	26	26	38

SERIES 2800-C PARTS LIST, 16” X 16” SIZE
FOR USE WITH GRAY IRON OR DUCTILE IRON PIPE

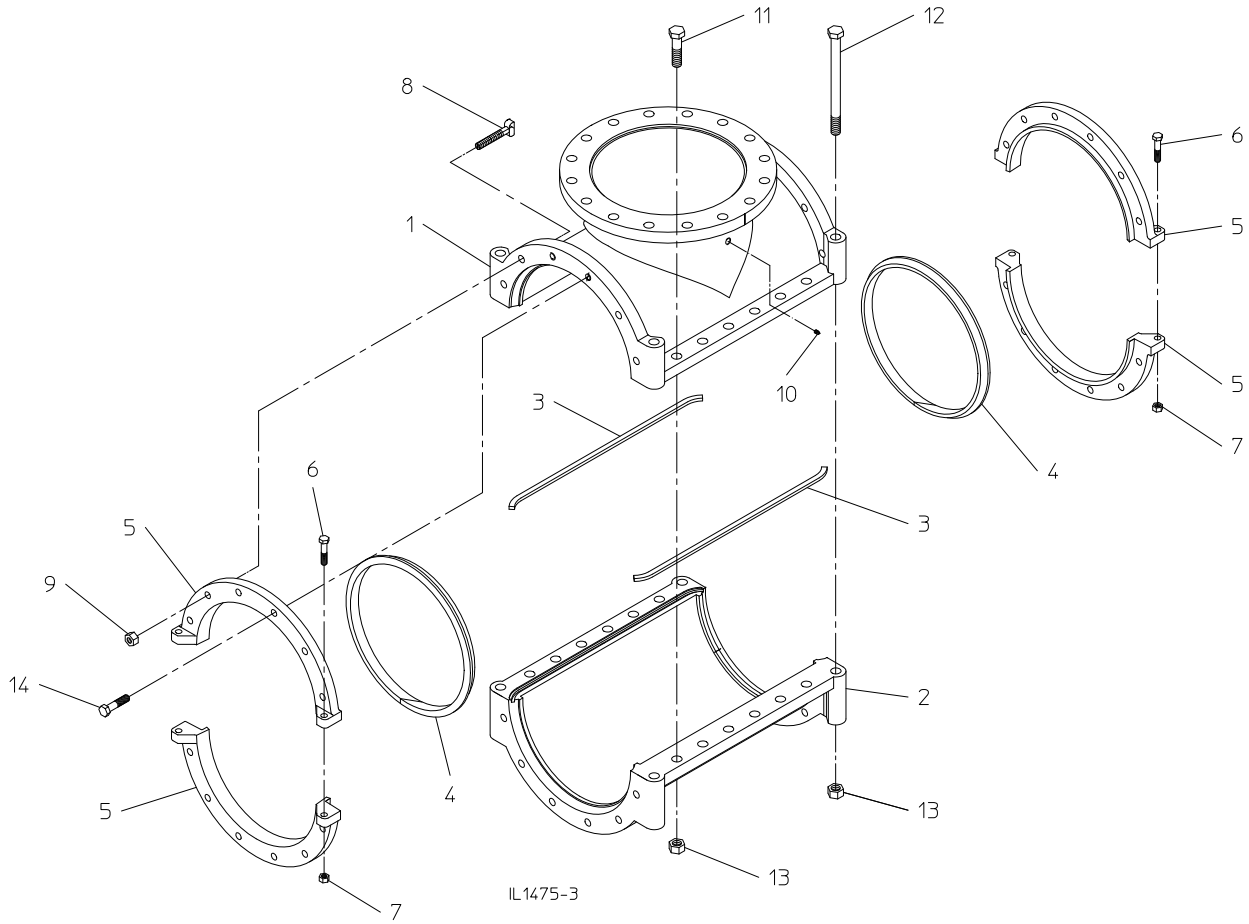

Ref No.	Description	Material	Quantity
1	Tapping Sleeve Front	Cast Ductile Iron	1
2	Tapping Sleeve Back	Cast Ductile Iron	1
3	MJ Side Gasket	Rubber	2
4	MJ End Gasket	Rubber	2
5	MJ Split Gland Half	Cast Ductile Iron	4
6	Hex Head Bolt, 5/8” - 11 x 3”	Zinc Plated Steel	4
7	Hex Nut, 5/8” - 11	Zinc Plated Steel	4
8	T-Head Bolt, 3/4” - 10 x 4-1/2”	Cor-Ten Steel	20
9	T-Head Nut, 3/4” - 10	Cor-Ten Steel	20
10	Square Head Pipe Plug, 1/2” NPT	Bronze	1
11	Hex Head Bolt, 1” - 8 x 4”	Zinc Plated	12
12	Hex Head Bolt, 1” - 8 x 13	Zinc Plated Steel	4
13	Hex Nut, 1” - 8	Zinc Plated Steel	16
14	Hex Head Bolt, 3/4” - 10 x 3-1/4”	Cor-Ten Steel	4

SERIES 2800-C PARTS LIST, 14” & 18”–24” SIZES
FOR USE WITH GRAY IRON OR DUCTILE IRON PIPE

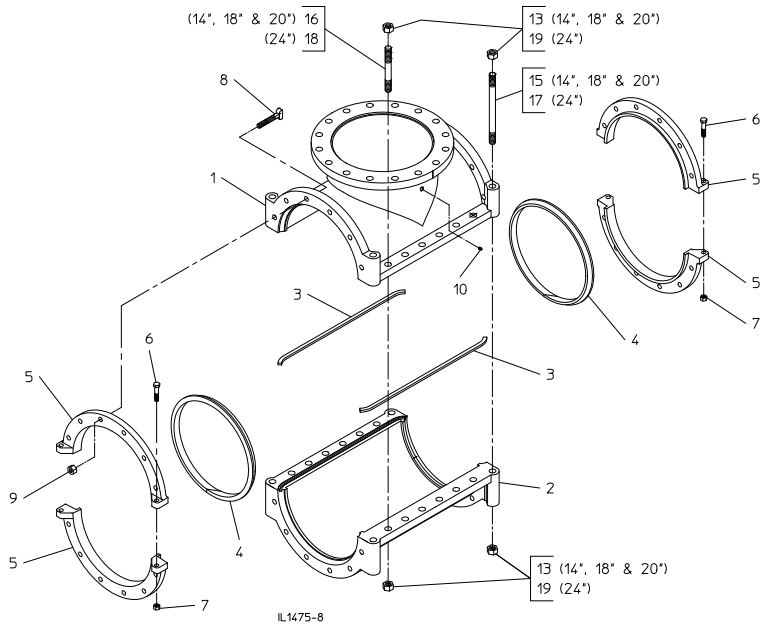

Ref No.	Description	Material	Quantity			
			14”	18”	20”	24”
1	Tapping Sleeve Front	Cast Ductile Iron	1	1	1	1
2	Tapping Sleeve Back	Cast Ductile Iron	1	1	1	1
3	MJ Side Gasket	Rubber	2	2	2	2
4	MJ End Gasket	Rubber	2	2	2	2
5	MJ Split Gland Half	Cast Ductile Iron	4	4	4	4
6	Hex Head Bolt, 3/4” - 10	Zinc Plated Steel	4	4	4	4
7	Hex Nut, 3/4” - 10	Zinc Plated Steel	4	4	4	4
8	T-Head Bolt, 3/4” - 10	Cor-Ten Steel	20	24	28	32
9	T-Head Nut, 3/4” - 10	Cor-Ten Steel	20	24	28	32
10	Square Head Pipe Plug, 1/2” NPT	Stainless Steel	1	1	1	1
13	Hex Nut, 1” - 8	Zinc Plated Steel	See Tables	See Tables	See Tables	-
15	Stud, 1” - 8	Zinc Plated Steel	4	4	4	-
16	Stud, 1” - 8	Zinc Plated Steel	See Tables	See Tables	See Tables	-
17	Stud, 1-1/4” - 7	Zinc Plated Steel	-	-	-	4
18	Stud, 1-1/4” - 7	Zinc Plated Steel	-	-	-	See Tables
19	Hex Nut, 1-1/4” - 7	Zinc Plated Steel	-	-	-	Sees Tables

Sleeve Size (Pipe x Branch)	14x4	14x6	14x8	14x10	14x12	14x14	18x4	18x6	18x8	18x10	18x12
Ref. No. 16	8	8	8	8	10	10	6	6	8	8	8
Ref. No. 13	24	24	24	24	28	28	14	14	16	16	16

Sleeve Size (Pipe x Branch)	18x14	18x16	18x18	20x4	20x6	20x8	20x10	20x12	20x14	20x16	20x18
Ref. No. 16	12	12	12	8	8	8	8	12	12	12	14
Ref. No. 13	20	20	20	16	16	16	16	20	20	20	22

Sleeve Size (Pipe x Branch)	20x20	24x4	24x6	24x8	24x10	24x12	24x14	24x16	24x18	24x20	24x24
Ref. No. 16 or 18	14	6	6	8	8	8	12	12	12	14	14
Ref. No. 13 or 19	22	14	14	16	16	16	32	32	32	36	36

SERIES 2800-A PARTS LIST, 4”–12” SIZES
FOR USE WITH ASBESTOS-CEMENT (A-C) PIPE

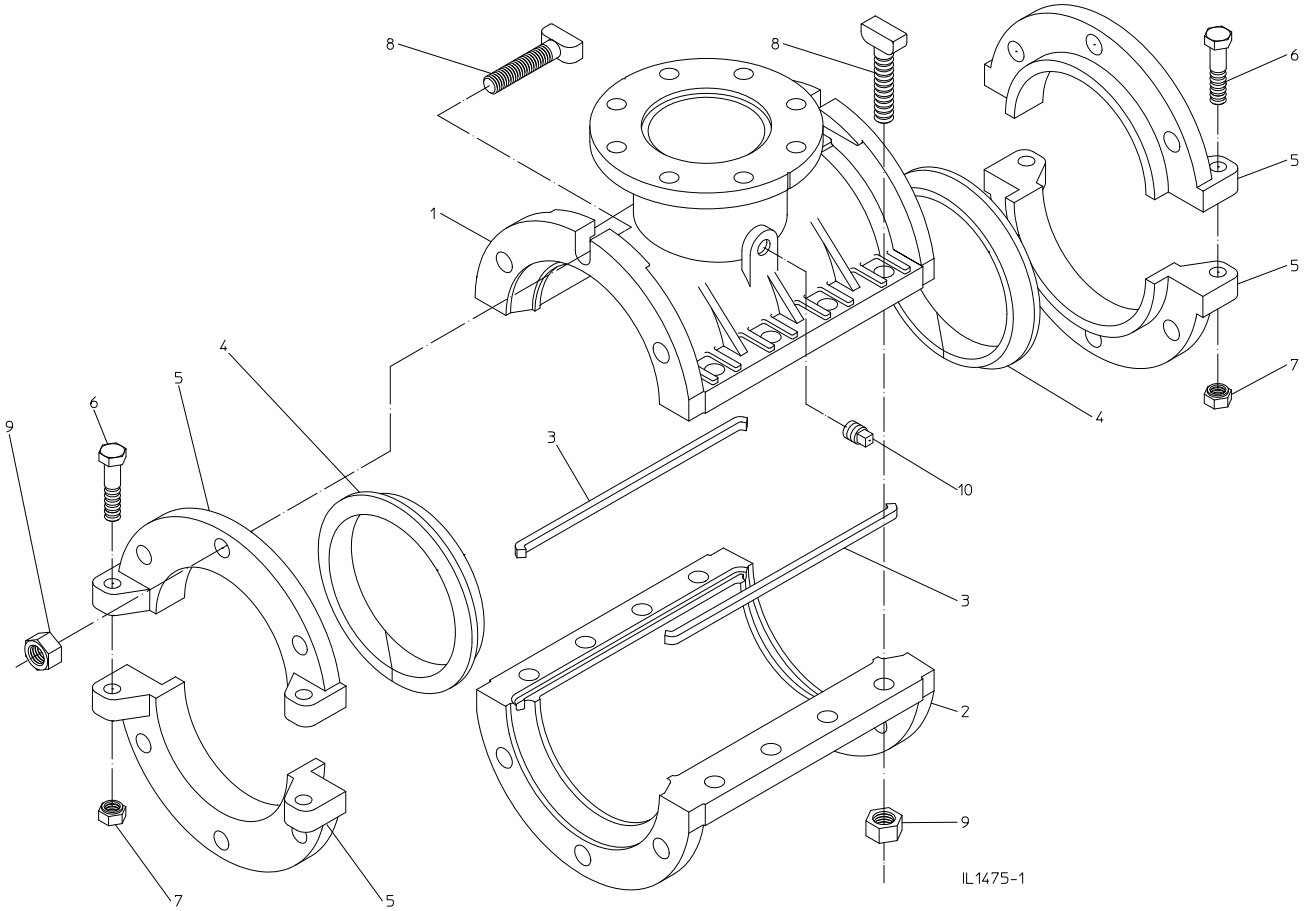

Ref No.	Description	Material	Quantity				
			4”	6”	8”	10”	12”
1	Tapping Sleeve Front	Cast Ductile Iron	1	1	1	1	1
2	Tapping Sleeve Back	Cast Ductile Iron	1	1	1	1	1
3	MJ Side Gasket	Rubber	2	2	2	2	2
4	MJ End Gasket	Rubber	2	2	2	2	2
5	MJ Split Gland Half	Cast Ductile Iron	4	4	4	4	4
6	Hex Head Bolt, 5/8” - 11	Zinc Plated Steel	4	4	4	4	4
7	Hex Nut, 5/8” - 11	Zinc Plated Steel	4	4	4	4	4
8	T-Head Bolt, 3/4” - 10	Cor-Ten Steel	14	20	20	26	26
9	T-Head Nut, 3/4” - 10	Cor-Ten Steel	14	20	20	26	26
10	Square Head Pipe Plug, 1/2” NPT	Bronze	1	1	1	1	1

AMERICAN Flow Control

SECTION 7

CHECK VALVES

Series 2100	7A-1 through 7A-12
Series 50SC	7B-1 through 7B-14
Series 600	7C-1 through 7C-13

AMERICAN

FLOW CONTROL

THE RIGHT WAY

INDEX

SERIES 2100 RESILIENT SEATED CHECK VALVE

PAGE

FEATURES.....7A-2

ORDERING

Dimensions

Standard:

3”–12”.....7A-3

14” & 16”.....7A-4

Weights.....7A-5

Submittal Sheet.....7A-6

INSTALLATION.....7A-7

REPAIRS

Parts Lists

Standard:

3”–12”.....7A-8

14” & 16”.....7A-9

Optional Backflushing Actuator:

3”–12”.....7A-10

14” & 16”.....7A-11

SPECIFICATIONS.....7A-12

Features

The AMERICAN Flow Control Series 2100 Resilient Seated Check Valve is designed for use in drinking water, sewage and fire protection systems, as well as irrigation and backflow control systems. The valve complies fully with ANSI/AWWA C508. It is ideal for pump and lift stations. Its design is simple, durable and eliminates most problems associated with metal seated swing check valves. The Series 2100 features a compact ductile iron body and bonnet. Ductile iron has more than twice the strength of gray iron.

The disc is made of ductile iron encapsulated with rubber. The 2100 is rated for 250 psig. The valve seals 100% leak tight at pressure above 5 psig. The waterway is unobstructed and free from pockets.

Traditional swing check valves require 90° of travel.The Series 2100 is designed to minimize disc slam. The disc travels only 35° from full open to full closed. The limited travel allows the valve to close before flow reversal in most applications.

There is only one moving part making this valve virtually maintenance free. Should the disc be damaged it can be reversed and the valve put back into immediate service.

Advantages Over Metal Seated Swing Check Valves

- 250 psig rating
- Ductile iron body, bonnet and disc
- Fusion bonded epoxy coating inside and outside
- Does not require outside lever, weights or springs
- Only one moving part
- No bronze seat ring to wear or need replacing
- Tight shutoff at pressures above 5 psig
- The 100% unobstructed flow area is free of pockets, which can trap debris.
- A factory installed back flushing actuator can be furnished as an option. This device is useful for priming pumps, back flushing, draining lines and system testing.

SERIES 2100 - STANDARD DIMENSIONS, 3”–12” SIZES

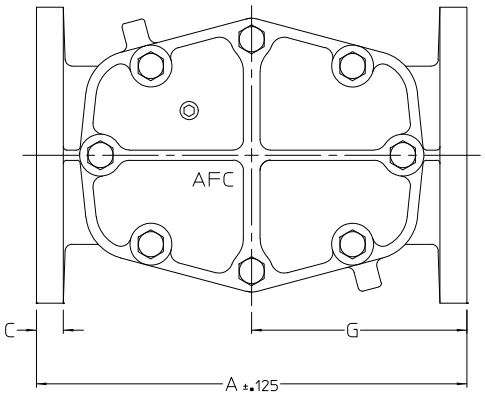

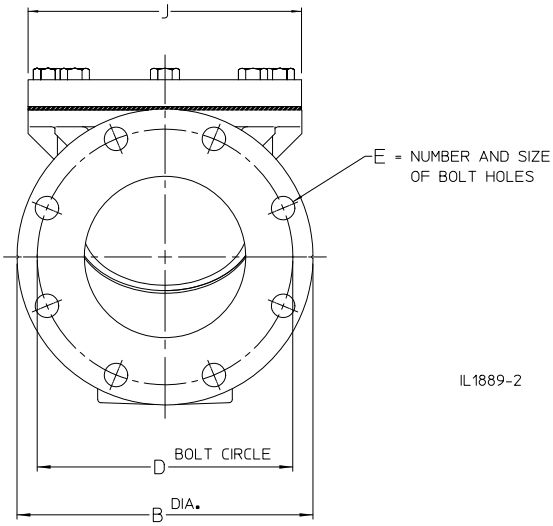

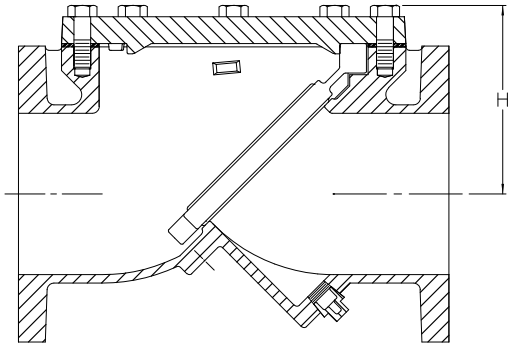

Size	A	B	C	D	E	G	H	J
3”	11.00	7.50	.75	6.00	4 - 0.62	5.50	4.50	5.31
4”	13.00	9.00	.94	7.50	8 - 0.75	6.50	5.19	6.75
6”	16.00	11.00	1.00	9.50	8 - 0.88	8.00	7.00	10.25
8”	19.50	13.50	1.12	11.75	8 - 0.88	9.75	8.41	12.06
10”	24.50	16.00	1.19	14.25	12 - 1.00	12.25	10.19	14.88
12”	27.50	19.00	1.25	17.00	12 - 1.00	13.75	11.94	17.62

NOTES:

1. Series 2100 Check Valves meet or exceed requirements of ANSI/AWWA C508.
2. Series 2100 has a 250 psig rated working pressure and 500 psig test pressure.
3. End flanges are in accordance with ANSI/AWWA C110/A21.10 or ANSI B16.1, Class 125.
4. Body and bonnet are coated with fusion bonded epoxy coating in compliance with ANSI/AWWA C550.
5. Valves have manufacturer’s name, pressure class and year of manufacture are cast on body or bonnet.
6. 4 in.–16 in. valves are Certified to NSF/ANSI Standard 61 and NSF/ANSI 372.

SERIES 2100 - STANDARD DIMENSIONS, 14” & 16” SIZES

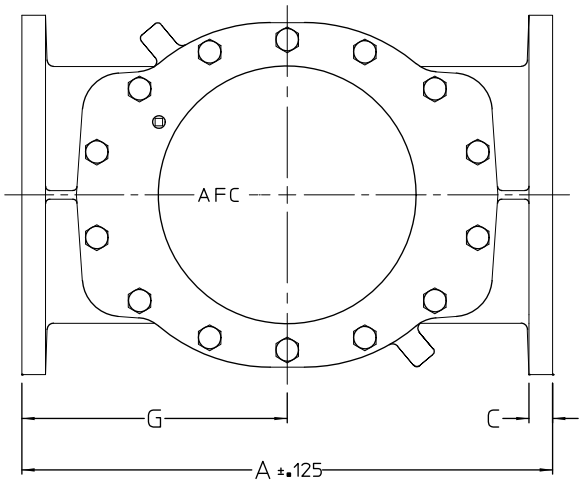

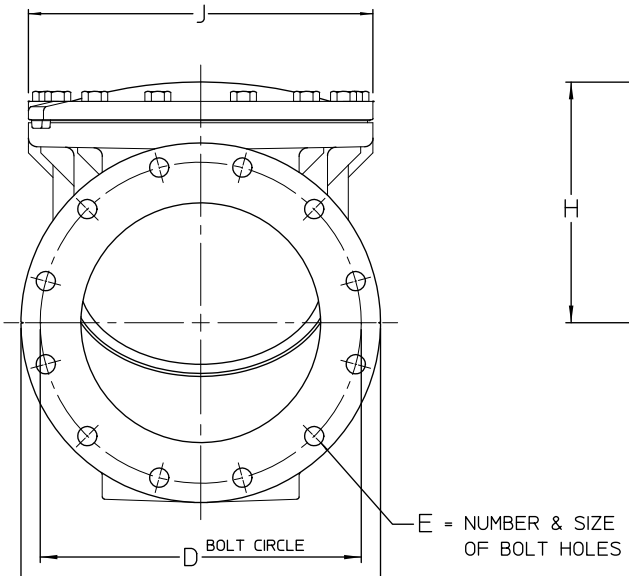

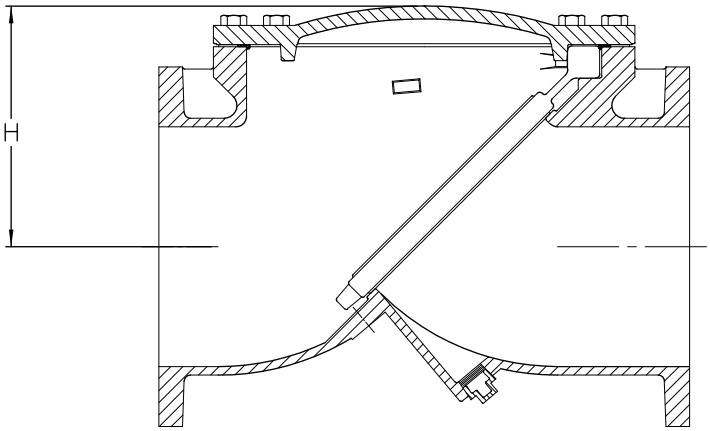

Size	A	B	C	D	E	G	H	J
14”	31.00	21.00	1.38	18.75	12 - 1.12	15.50	14.12	20.12
16”	36.00	23.50	1.44	21.25	16 - 1.12	17.00	15.75	22.88

SERIES 2100 - WEIGHTS

Size	Assembly Weight
3”	31 lb
4”	50 lb
6”	98 lb
8”	168 lb
10”	290 lb
12”	449 lb
14”	545 lb
16”	760 lb

AMERICAN Flow Control
SERIES 2100 RESILIENT SEATED CHECK VALVE
SUBMITTAL SHEET

Quantity							
3”	**4”**	**6”**	**8”**	**10”**	**12”**	**14”**	**16”**
Optional Back flushing Actuator: ☐ Yes ☐ No							
Other Requirements (List):							

AMERICAN Flow Control
American-Darling Valve and Waterous
A Division of AMERICAN

NOTES:
1. Series 2100 Check Valves meet or exceed requirements of ANSI/AWWA C508.
2. 250 psig rated working pressure
3. 4 in.–16 in. valves are Certified to NSF/ANSI Standard 61 and NSF/ANSI 372.

Visit our web site at http://www.american-usa.com/afc

SERIES 2100 - INSTALLATION

This instruction is issued as a recommendation to the customer for the proper installation of resilient seated check valves.

Receiving Inspection

When valves are received, they should be unloaded carefully and stored with disc in closed position. Any damage or shortage should be reported immediately to the delivering carrier, noted on the bill of lading, and signed by the driver on your copy.

Installation

1. Protect stored valves from the elements and from undue damage in handling.
2. Check bonnet bolting for tightness.
3. At the time of installation make sure that the disc swings freely from the closed position to the stop in the open position. Check the direction of flow in the pipeline and make sure that the arrow cast on the side of the valve body agrees with this direction of flow so that the disc will swing open with flow through the valve.
4. Check valves should be installed in accordance with Standard MSS SP-92.
5. Do not install check valves in a vertical line with downward flow.
6. Valve must be supported so that strains are not exerted on the check valve body. In cases where the valve is to be inserted as a final step on the piping, make sure that the piping is properly lined up and spaced so that the bolting of the valve in the line is not used to correct any errors in piping alignment or spacing.
7. If the disc is ever damaged, it can be reversed as an intermediate resolution and the valve restored to service. To reverse the disc, you must shut off line pressure and bleed residual pressure from the line before attempting to remove the bonnet cover. Remove bonnet bolting and the bonnet. Reverse disc and replace bonnet and bolting. Be sure that bonnet gasket is in its proper position before tightening the bolts.

   WARNING: Special care should be taken in the installation, inspection and repair of pressure containing devices such as valves and hydrants. FAILURE TO FOLLOW PROPER PRACTICE AND GUIDELINES CAN RESULT IN SERIOUS INJURY OR DEATH. Do not make repairs while check valve is under pressure.

SERIES 2100 - STANDARD PARTS LIST, 3”-12” SIZES

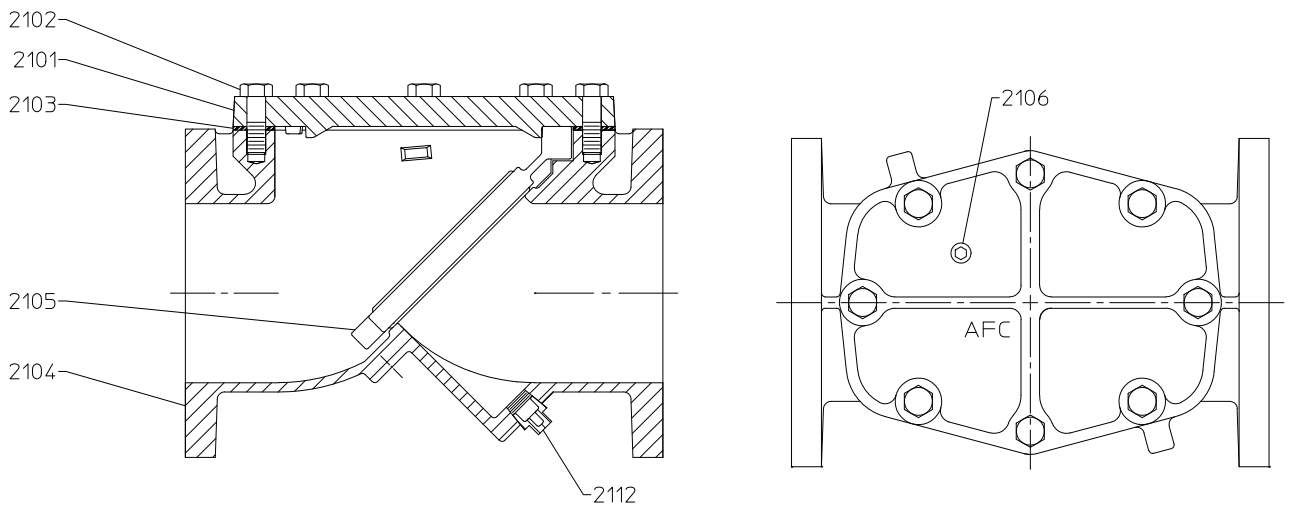

REF NO.	DESCRIPTION	MATERIAL	QTY
2101	Valve Bonnet	Ductile Iron	1
2102	Bonnet Bolt	Stainless Steel	Varies
2103	Bonnet Gasket	Buna N	1
2104	Valve Body	Ductile Iron	1
2105	Disc	See Note 7	1
2106	Pipe Plug, Square Head 3/8 NPT	Stainless Steel	1
2112	Pipe Plug, Square Head 3/4 NPT	Stainless Steel	1

NOTES:

1. Series 2100 Check Valves meet or exceed requirements of ANSI/AWWA C508.
2. Series 2100 has a 250 psig rated working pressure and 500 psig test pressure.
3. End flanges are in accordance with ANSI/AWWA C110/A21.10 or ANSI B16.1, Class 125.
4. Body and bonnet are coated with fusion bonded epoxy coating in compliance with ANSI/AWWA C550.
5. Valves have manufacturer’s name, pressure class and year of manufacture cast on body or bonnet.
6. Ductile iron is ASTM A536 grade 65-45-12.
7. Disc is ductile iron with stainless steel shaft and nylon reinforcement, encapsulated with rubber.
8. 4 in.–12 in. valves are Certified to NSF/ANSI Standard 61 and NSF/ANSI 372.

SERIES 2100 - STANDARD PARTS LIST, 14” & 16” SIZES

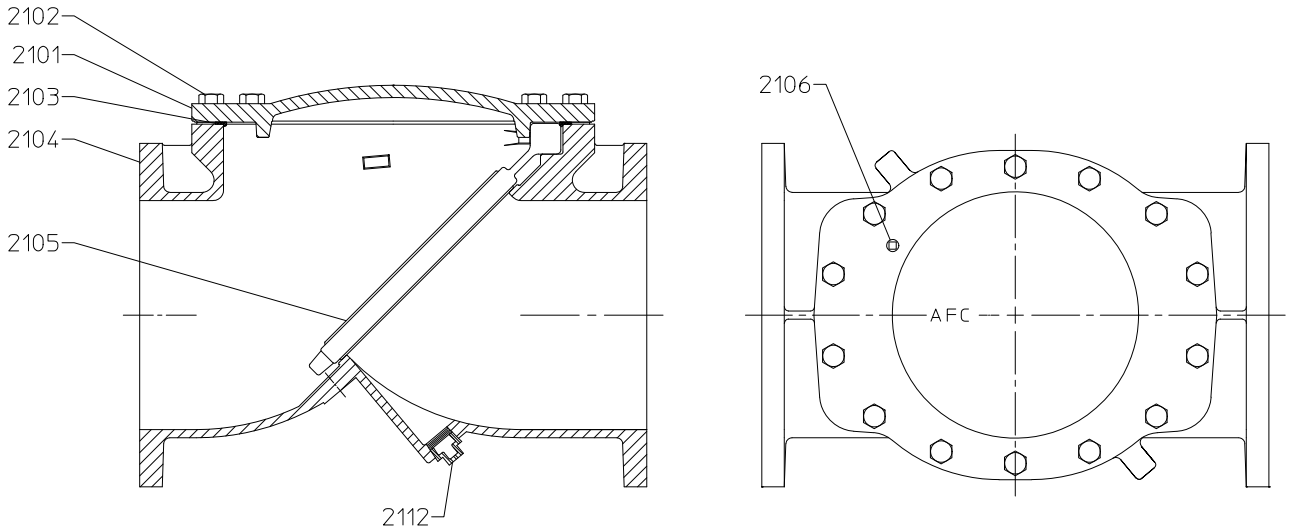

IL1889-8

REF NO.	DESCRIPTION	MATERIAL	QTY
2101	Valve Bonnet	Ductile Iron	1
2102	Bonnet Bolt	Stainless Steel	Varies
2103	Bonnet Gasket	Buna N	1
2104	Valve Body	Ductile Iron	1
2105	Disc	See Note 7	1
2106	Pipe Plug, Square Head 3/8 NPT	Stainless Steel	1
2112	Pipe Plug, Square Head 3/4 NPT	Stainless Steel	1

NOTES:

1. Series 2100 Check Valves meet, or exceed requirements of ANSI/AWWA C508.
2. Series 2100 has a 250 psig rated working pressure and 500 psig test pressure.
3. End flanges are in accordance with ANSI/AWWA C110/A21.10 or ANSI B16.1, Class 125.
4. Body and bonnet are coated with fusion bonded epoxy coating in compliance with ANSI/AWWA C550.
5. Valves have manufacturer’s name, pressure class and year of manufacture cast on body or bonnet.
6. Ductile iron is ASTM A536 grade 65-45-12.
7. Disc is ductile iron with stainless steel shaft and nylon reinforcement, encapsulated with rubber.
8. 14 in. and 16 in. valves are Certified to NSF/ANSI Standard 61 and NSF/ANSI 372.

SERIES 2100 - OPTIONAL BACKFLUSHING ACTUATOR PARTS LIST, 3”–12” SIZES

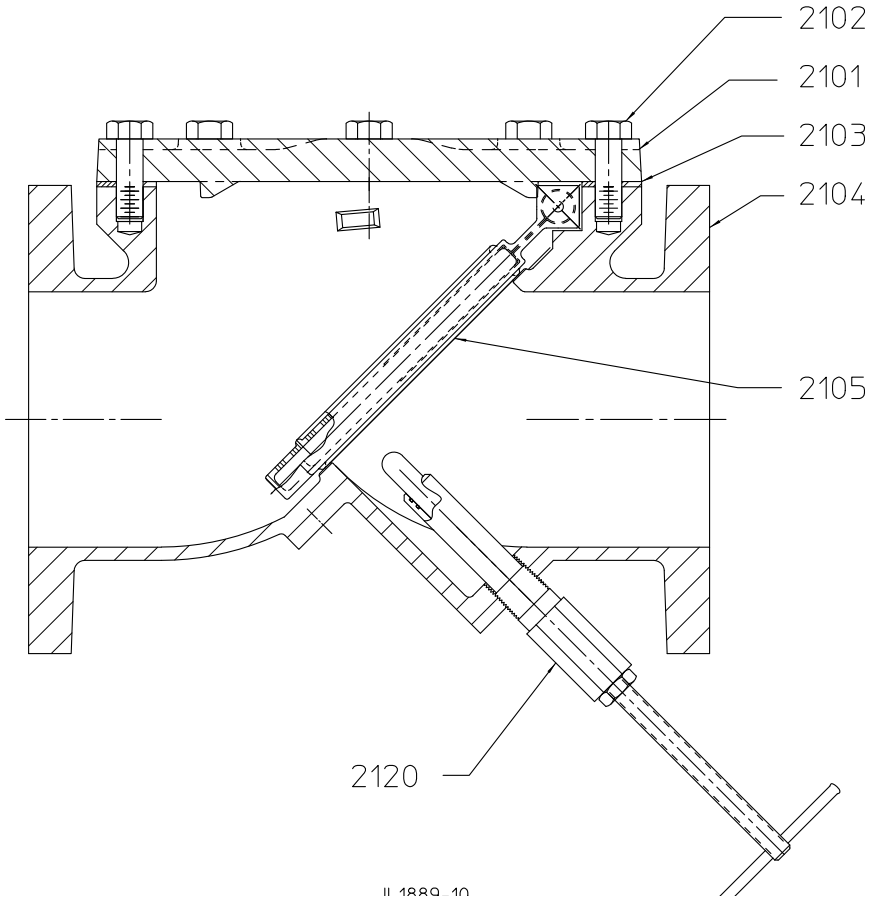

REF NO.	DESCRIPTION	MATERIAL	QTY
2101	Valve Bonnet	Ductile Iron	1
2102	Bonnet Bolt	Stainless Steel	Varies
2103	Bonnet Gasket	Buna N	1
2104	Valve Body	Ductile Iron	1
2105	Disc	See Note 7	1
2120	Back flushing Actuator Assembly	Assembly	1

NOTES:

1. Series 2100 Check Valves meet, or exceed requirements of ANSI/AWWA C508.
2. Series 2100 has a 250 psig rated working pressure and 500 psig test pressure.
3. End flanges are in accordance with ANSI/AWWA C110/A21.10 or ANSI B16.1, Class 125.
4. Body and bonnet are coated with fusion bonded epoxy coating in compliance with ANSI/AWWA C550.
5. Valves have manufacturer’s name, pressure class and year of manufacture cast on body or bonnet.
6. Ductile iron is ASTM A536 grade 65-45-12.
7. Disc is ductile iron with stainless steel shaft and nylon reinforcement, encapsulated with rubber.
8. 4 in.–12 in. valves are Certified to NSF/ANSI Standard 61 and NSF/ANSI 372.

SERIES 2100 - OPTIONAL BACKFLUSHING ACTUATOR PARTS LIST, 14” & 16” SIZES

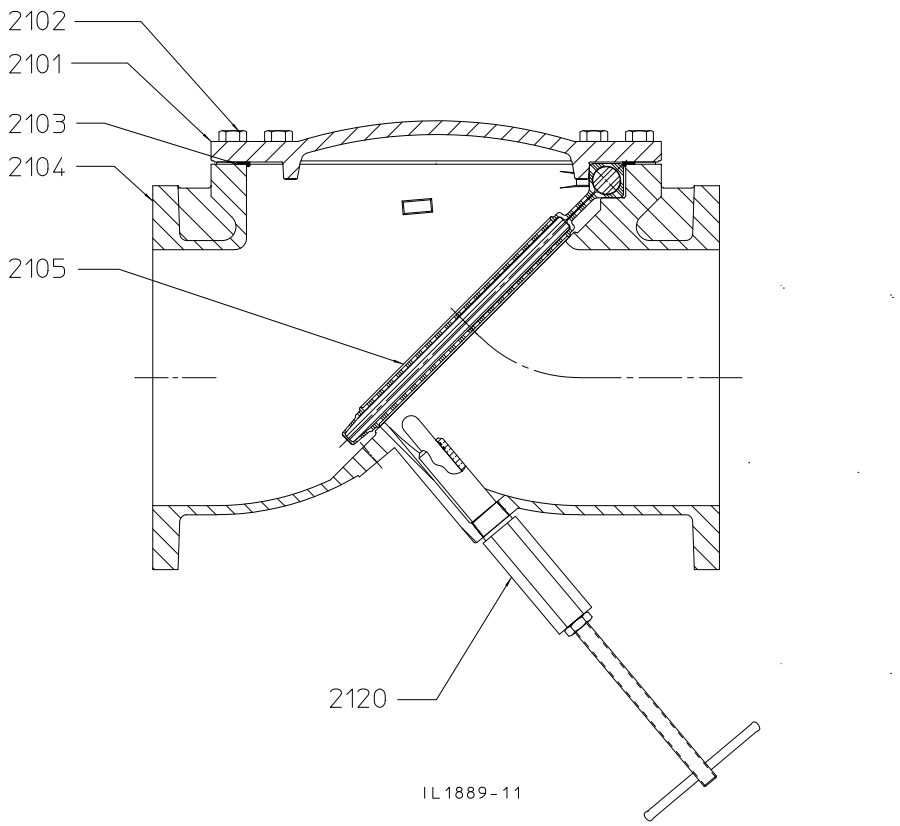

REF NO.	DESCRIPTION	MATERIAL	QTY
2101	Valve Bonnet	Ductile Iron	1
2102	Bonnet Bolt	Stainless Steel	Varies
2103	Bonnet Gasket	Buna N	1
2104	Valve Body	Ductile Iron	1
2105	Disc	See Note 7	1
2120	Backflushing Actuator Assembly	Assembly	1

NOTES:

1. Series 2100 Check Valves meet or exceed requirements of ANSI/AWWA C508.
2. Series 2100 has a 250 psig rated working pressure and 500 psig test pressure.
3. End flanges are in accordance with ANSI/AWWA C110/A21.10 or ANSI B16.1, Class 125.
4. Body and bonnet are coated with fusion bonded epoxy coating in compliance with ANSI/AWWA C550.
5. Valves have manufacturer’s name, pressure class and year of manufacture cast on body or bonnet.
6. Ductile iron is ASTM A536 grade 65-45-12.
7. Disc is ductile iron with stainless steel shaft and nylon reinforcement, encapsulated with rubber.
8. 14 in. and 16 in. valves are Certified to NSF/ANSI Standard 61 and NSF/ANSI 372.

SERIES 2100 SPECIFICATIONS

- Resilient seated check valves shall be manufactured from ductile iron meeting or exceeding ASTM A536. Valves shall be rated for 250 psig cold water working pressure. Check valves shall comply with ANSI/AWWA C508.
- Valves shall have a ductile iron disc fully encapsulated with EPDM rubber. Disc travel to closure shall not be more than 35° and shall seal with no leakage at pressures above 5 psig.
- Valves to be coated with fusion-bonded epoxy on all internal and external ferrous surfaces. Body to bonnet fasteners to be Type 304 stainless steel.
- Exposed metallic rings are not allowed. Disc shall be the only allowable moving part. No O-Rings, pivot pins or other bearings are allowed. Disc must be reversible such that either side will seal equally.
- Valves shall be equal to AMERICAN Flow Control's **Series 2100** Ductile Iron Resilient Seated Check Valve.

INDEX

SERIES 52-SC SWING CHECK VALVE

PAGE

INTRODUCTION 7B-2
FEATURES AND BENEFITS 7B-3
SPECIFICATIONS 7B-4
ORDERING
Dimensions:
Standard 7B-5
Lever and Weight 7B-6
Lever and Spring 7B-7
Optional Tap Locations 7B-8
Weights 7B-9
Submittal Sheet 7B-10

INSTALLATION AND MAINTENANCE 7B-11
REPAIRS
Parts Lists:
Standard 7B-12
Lever and Weight 7B-13
Lever and Spring 7B-14

AMERICAN FLOW CONTROL
SERIES 52-SC SWING CHECK VALVE

AMERICAN Flow Control has incorporated many innovative design changes that prolong service life for swing check valves in water and sewage service. AMERICAN Flow Control SERIES 52-SC swing check valves are available in standard configurations, with lever and spring or with lever and weight.

SERIES 52-SC FEATURES AND BENEFITS

AMERICAN Flow Control has incorporated significant design changes to prolong service life for swing check valves in water and sewage service. AMERICAN Flow Control 52-SC swing check valves incorporate the following design features to increase service life.

BODIES AND BONNETS
Valve bodies and bonnets are made of gray cast iron. Internal contours are specifically designed to provide a smooth flow passage and reduce head loss through the valve. The entire clapper arm and disc assembly can be removed through the bonnet opening while the valve is installed in the line.

CLAPPER ARMS
The clapper arms are made of impact resistant ductile iron. The area through which the clapper arm shaft and in which the disc stud is attached, contain bushings for improved wear and corrosion resistance.

CLAPPER ARM SHAFTS
The clapper arm shafts are made of corrosion resistant stainless steel for strength and durability.

RETAINING PLUGS
The clapper arm shaft is held in place by corrosion resistant bronze retaining plugs. The plugs also act as a wear-resistant bearings for the clapper arm assembly. The unique design allows for easy removal and disassembly of internal parts, should the need arise.

DISCS
Discs on check valves 4 in. and larger are made of gray iron with bronze seat rings securely fastened into grooves machined in the disc. The connection between the disc and clapper arm is designed with sufficient clearance to allow the disc to adjust to the seat.

AMERICAN Flow Control 52-SC Swing Check Valves have these features:

- Gray Cast Iron Valve Bodies
- Comply with ANSI/AWWA C508
- Stainless Steel Clapper Arm Shafts
- Full Size Waterway
- Solid Ductile Iron Clapper Arm
- Bronze Retaining Plugs
- Optional Fusion-Bonded Epoxy Coating Inside and Out
- Certified to NSF/ANSI 61 & 372

SERIES 52-SC SPECIFICATIONS

Swing check valves shall be manufactured from gray cast iron meeting or exceeding ASTM A126 Grade B. Valves shall comply with ANSI/AWWA C508, latest revision. Valves shall be designed to permit an adequate waterway opening for utilization of pipeline cleaning apparatus. Disassembly of valve internals to require no special tools other than standard socket wrenches. Clapper arm shall be made of ductile iron conforming to ASTM A536.

Check valve shafts are to be constructed stainless steel and be equipped with corrosion-resistant bronze bearings at each end. Shaft and bearings are to be completely replaceable, if necessary, with valve remaining in the pipeline. If the valve shaft is extended outside the body, a double O-ring seal fully contained within the shaft bearing shall be provided. There shall be a grease fitting for lubrication between the O-rings for double protection against foreign matter reaching bearing surfaces. Different lever orientation shall be possible in the field in increments of 45° without shaft modifications or extra drilling.

Check valve seating surfaces shall be bronze. Valve design shall be such that the valve remains in the closed position when installed in horizontal pipeline under no-flow condition.

Check valves to be AMERICAN Flow Control 52-SC Swing Check Valves.

SERIES 52-SC STANDARD DIMENSIONS

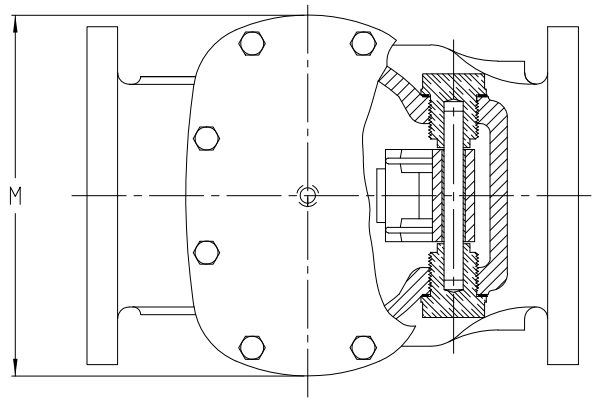

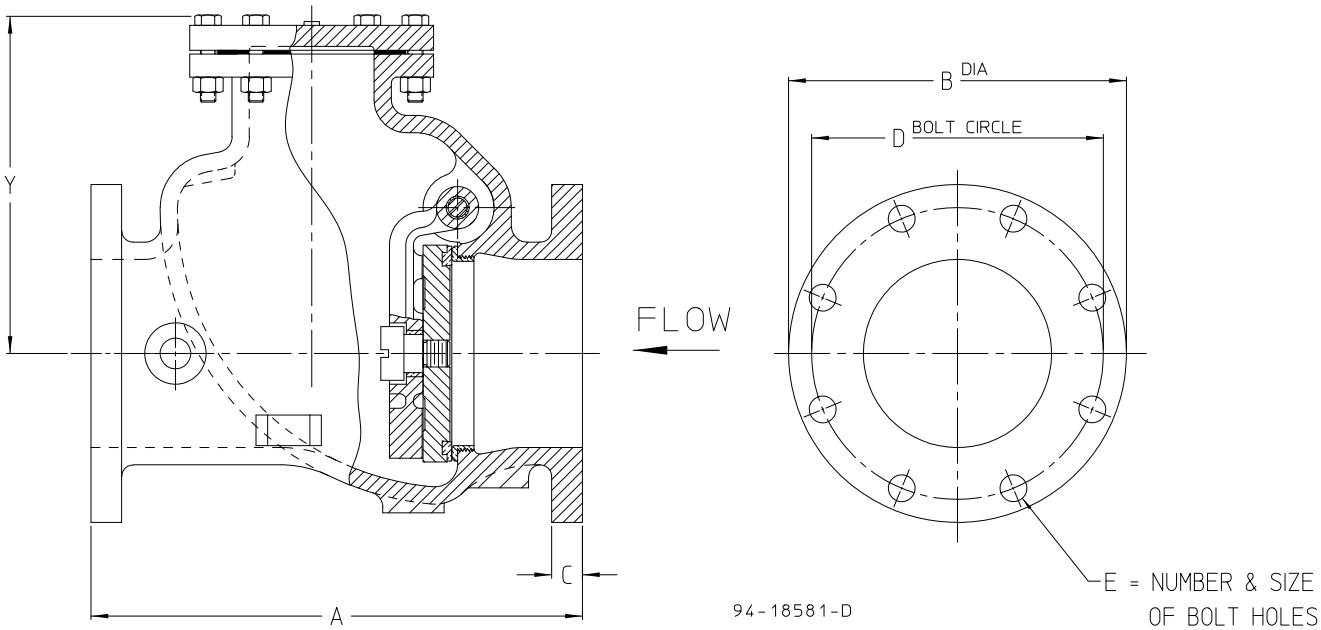

Valve Size	A	B	C	D	E	M	Y
3”	11.00	7.50	.75	6.00	4 - 0.75	7.88	7.38
4’	13.00	9.00	.94	7.50	8 - 0.75	9.00	9.00
6”	16.00	11.00	1.00	9.50	8 - 0.88	11.75	10.75
8”	19.50	13.50	1.13	11.75	8 - 0.88	14.25	12.75
10”	24.50	16.00	1.19	14.25	12 - 1.00	16.38	14.75
12”	27.50	19.00	1.25	17.00	12 - 1.00	18.75	18.00
14”	31.00	21.00	1.38	18.75	12 - 1.13	22.50	20.38
16”	36.00	23.50	1.44	21.25	16 - 1.13	24.50	21.75

SERIES 52-SC LEVER AND WEIGHT DIMENSIONS

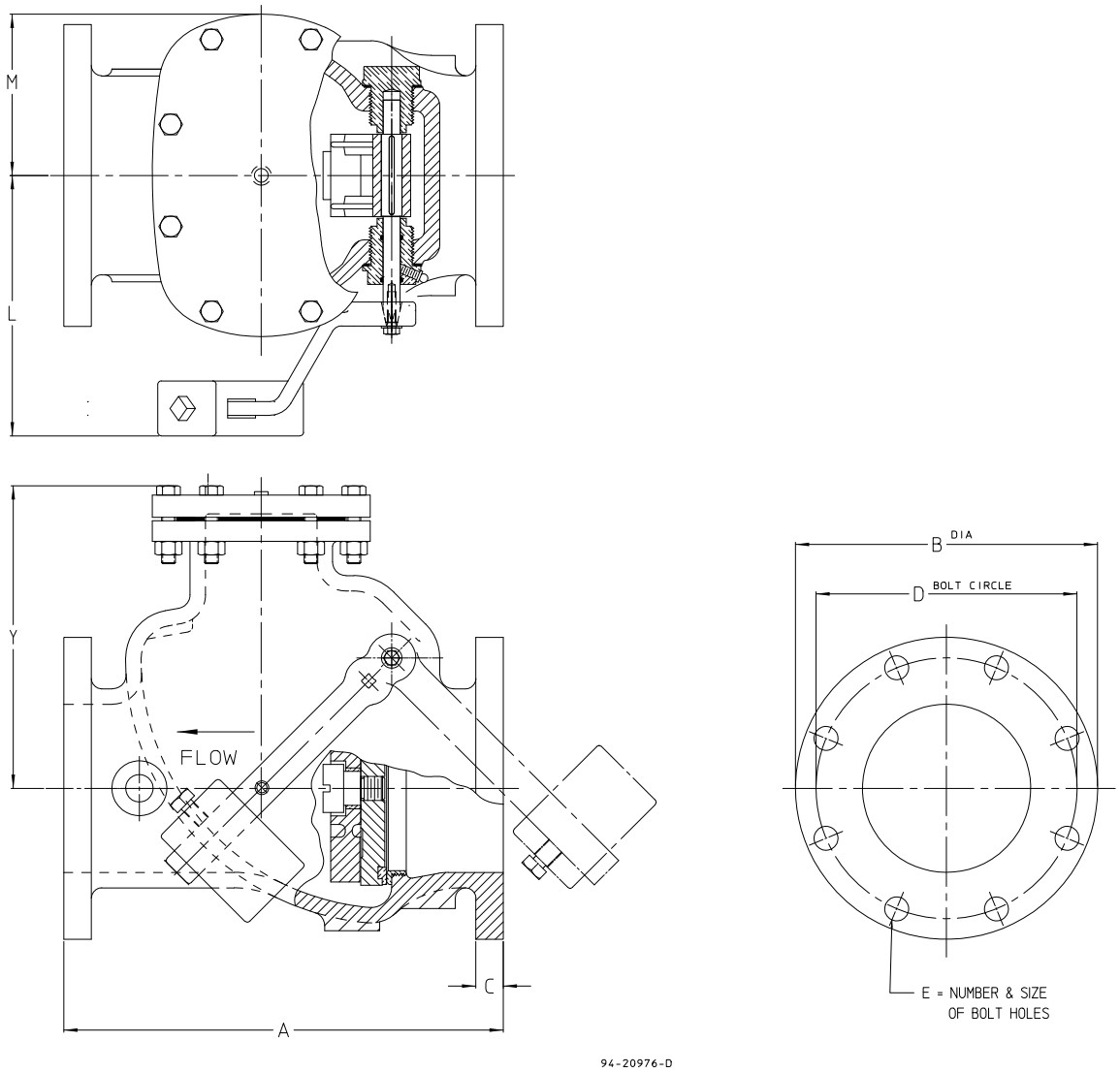

Valve Size	A	B	C	D	E	H	L	M	Y
3”	11.00	7.50	.75	6.00	4 - 0.75	8.50	5.85	3.94	7.38
4’	13.00	9.00	.94	7.50	8 - 0.75	9.50	6.57	4.50	9.00
6”	16.00	11.00	1.00	9.50	8 - 0.88	11.13	9.43	5.88	10.75
8”	19.50	13.50	1.13	11.75	8 - 0.88	14.13	10.66	7.13	12.75
10”	24.50	16.00	1.19	14.25	12 - 1.00	15.00	12.35	8.19	14.75
12”	27.50	19.00	1.25	17.00	12 - 1.00	15.00	13.01	9.38	18.00
14”	31.00	21.00	1.38	18.75	12 - 1.13	16.00	15.56	11.25	20.38
16”	36.00	23.50	1.44	21.25	16 - 1.13	18.00	16.96	12.25	21.75

SERIES 52-SC LEVER AND SPRING DIMENSIONS

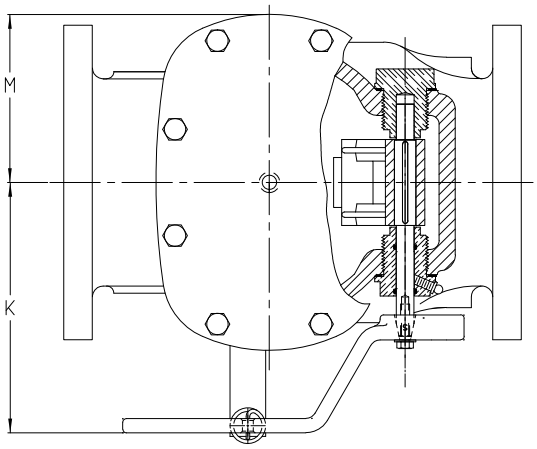

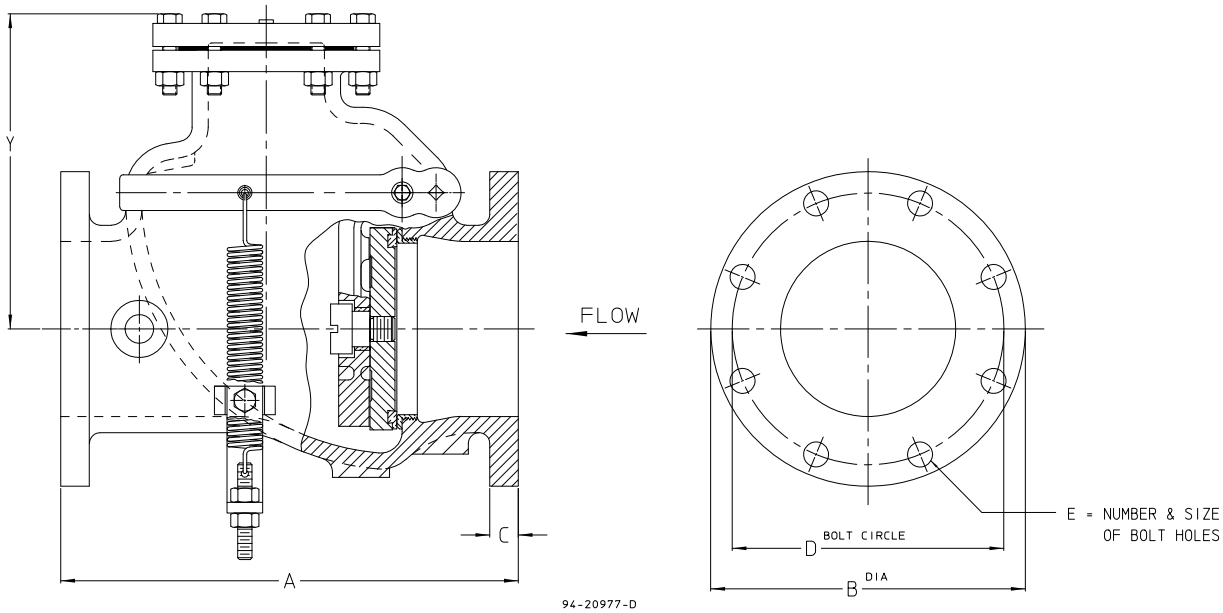

Valve Size	A	B	C	D	E	K	M	Y
3”	11.00	7.50	.75	6.00	4 - 0.75	5.35	3.94	7.38
4”	13.00	9.00	.94	7.50	8 - 0.75	6.06	4.50	9.00
6”	16.00	11.00	1.00	9.50	8 - 0.88	8.68	5.88	10.75
8”	19.50	13.50	1.13	11.75	8 - 0.88	9.66	7.13	12.75
10”	24.50	16.00	1.19	14.25	12 - 1.00	11.16	8.19	14.75
12”	27.50	19.00	1.25	17.00	12 - 1.00	11.82	9.38	18.00
14”	31.00	21.00	1.38	18.75	12 - 1.12	13.94	11.25	20.38
16”	36.00	23.50	1.44	21.25	16 - 1.12	15.33	12.25	21.75

SERIES 52-SC OPTIONAL TAP LOCATIONS

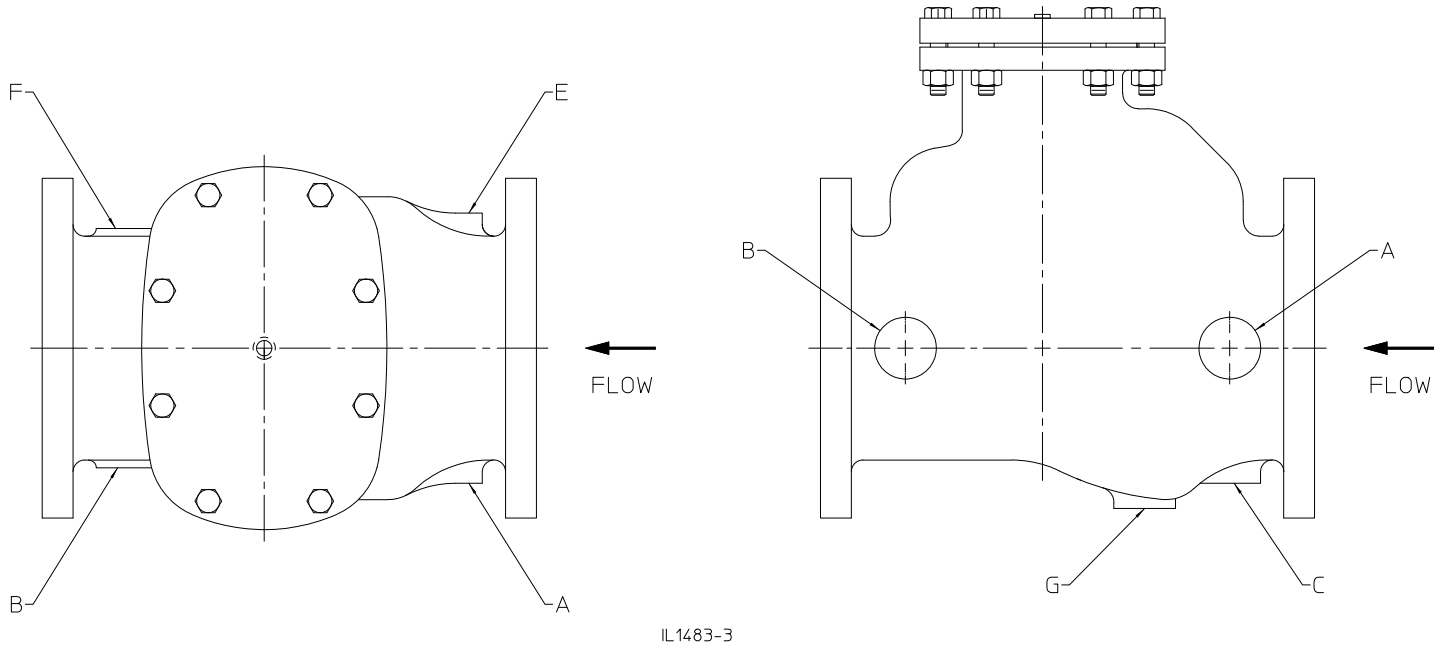

Valve Size	Maximum Tap Size for Bosses A, B, C, E, F, & G
3”	1/2 NPT
4”	3/4 NPT
6”	1 NPT
8”	1 NPT
10”	2 NPT
12”	2 NPT
14”	2 NPT
16	2 NPT

SERIES 52-SC WEIGHTS

Valve Size	Standard	Lever / Spring	Lever / Weight
3”	61	63	64
4”	98	102	104
6”	167	170	173
8”	274	288	295
10”	445	450	470
12”	620	655	655
14”	1010	1080	1080
16’	1180	1250	1250

NOTE: All weights are in pounds

AMERICAN Flow Control
SERIES 52-SC SWING CHECK VALVE

SUBMITTAL SHEET

QTY	3”	4”	6”	8”	10”	12”	14”	16”

Type (Check One)	Face (Check One)
☐ Standard	☐ Bronze Faced Disc
☐ Lever and Weight	☐ Rubber Faced Disc (3” - 10”)
☐ Lever and Spring	

Optional Body Tap: Size _____

Location _____

Other Requirements (List):

AMERICAN Flow Control
American-Darling Valve and Waterous
A Division of AMERICAN

NOTES:
1. Series 52-SC valves meet or exceed requirements of ANSI/AWWA C508.
2. 3 in.–12 in. valves have 200 psig rated working pressure.
3. 14 in. and 16 in. valves have 150 psig rated working pressure.
4. Certified to NSF/ANSI 61 & 372.

Visit our web site at http://www.american-usa.com/afc

INSTALLATION

This information is provided as a recommendation to the customer for the proper use and installation of swing check valves.

1. When received, the valves should be unloaded carefully and in the case of Series 52-SC, stored with clapper braced in closed position. If provided, leave end protectors in place after initial examination. Protect stored valves from the elements and from undue damage in handling.

2. At the time of installation, remove any bracing from the swing check valve. Make sure the valve and flange gasket surfaces are clean and free of damage. Clean the inside of the valve to remove all debris and/or contaminants that may affect performance, or fluid quality. Check for free movement of clapper and inspect valve seal. Check the direction of flow in the pipeline and make sure the arrow cast on the side of the valve body agrees with the direction of flow through the valve.

3. Valves without lever and weight, or spring, are to be installed with the centerline of the valve port in a horizontal position and with the bonnet facing upward. Check valves will operate satisfactorily if not oriented more than 45° from the horizontal and with the flow upward.

4. To help prevent check valve slam, the valve can be supplied with an optional extended shaft configuration, equipped with either lever and weight, or lever and spring. The principle behind either of these options is to close the valve before the fluid establishes a reverse flow. The torque required to close the valve is unique to each system. The torque can be adjusted by changing the position and/or number of springs, or weights, used to aid valve closure. In any service where the possibility of slamming exists, it is recommended that check valves be equipped with lever and spring, or lever and weight.

5. Check valves equipped with lever and spring can be used in a horizontal pipeline or in a vertical pipeline only when flow is upward. Check valves equipped with lever and weight can also be used in either a horizontal pipeline or a vertical pipeline. The lever must be positioned correctly to achieve valve closure. In the case of the Series 52-SC, the correct position of the lever and weight, when valve is installed in a horizontal line is 45° below the horizontal centerline of pipe, on the downstream side of the check valve disc. If the check valve is to be installed in a vertical line with upward flow, the lever should be moved 90° counterclockwise from this position.

6. Check valves should be installed in accordance with Standard Practice MSS SP-92.

7. **DO NOT INSTALL CHECK VALVES IN A VERTICAL LINE WITH DOWNWARD FLOW.**

8. At the time of installation, make sure piping is properly aligned and supported to avoid stress on the valve body. Under no circumstances should the installation of the valve be used to correct alignment errors.

TESTING

Check to see that all valve joints and pressure-containing bolts are tight. After testing, relieve excess pressure from the line.

OPERATION

1. On swing check valves without lever or weight, there are no special instructions regarding the operation since the valve is actuated by line flow.

2. If supplied with a lever or weight, the check valve can be adjusted to counteract sudden closure due to changes in flow conditions. Adjustment may be accomplished by adjusting the tension on the spring, or the position, and/or amount, of weight on the valve.

MAINTENANCE

1. Normally there is very little maintenance on a check valve. On standard check valves it is suggested the valve be disassembled once a year. Depressurize the valve for inspection. Check for wear at all oscillating locations.

2. On the Series 52-SC Check Valves with extended shaft designs (i.e. equipped with lever and weight or spring) should be inspected every six months for adequate lubriacation. To ensure adequate lubrication, add an AMERICAN Flow Control recommended grease between O-rings until resistance to flow of the lubricant into the grease fitting (32-7) is felt on the grease gun lever. If leakage occurs due to oscillation, replace O-rings by removing retainer plug. Be sure to pressurize space between o-rings with grease

SPARE PARTS

Under most conditions the only spare parts needed for swing check valves would be bonnet gasket, and any applicable retaining plug gaskets and O-rings, if valve is equipped with extended shaft. Under conditions where very frequent oscillation of a clapper is experienced, and/or sever, service conditions, other parts may be kept in stock.

WARNING: Special care should be taken in the installation, inspection and repair of pressure containing devices such as valves and hydrants. FAILURE TO FOLLOW PROPER PRACTICE AND GUIDELINES CAN RESULT IN SERIOUS INJURY OR DEATH. Do not make repairs while check valve is under pressure.

SERIES 52-SC STANDARD PARTS LIST

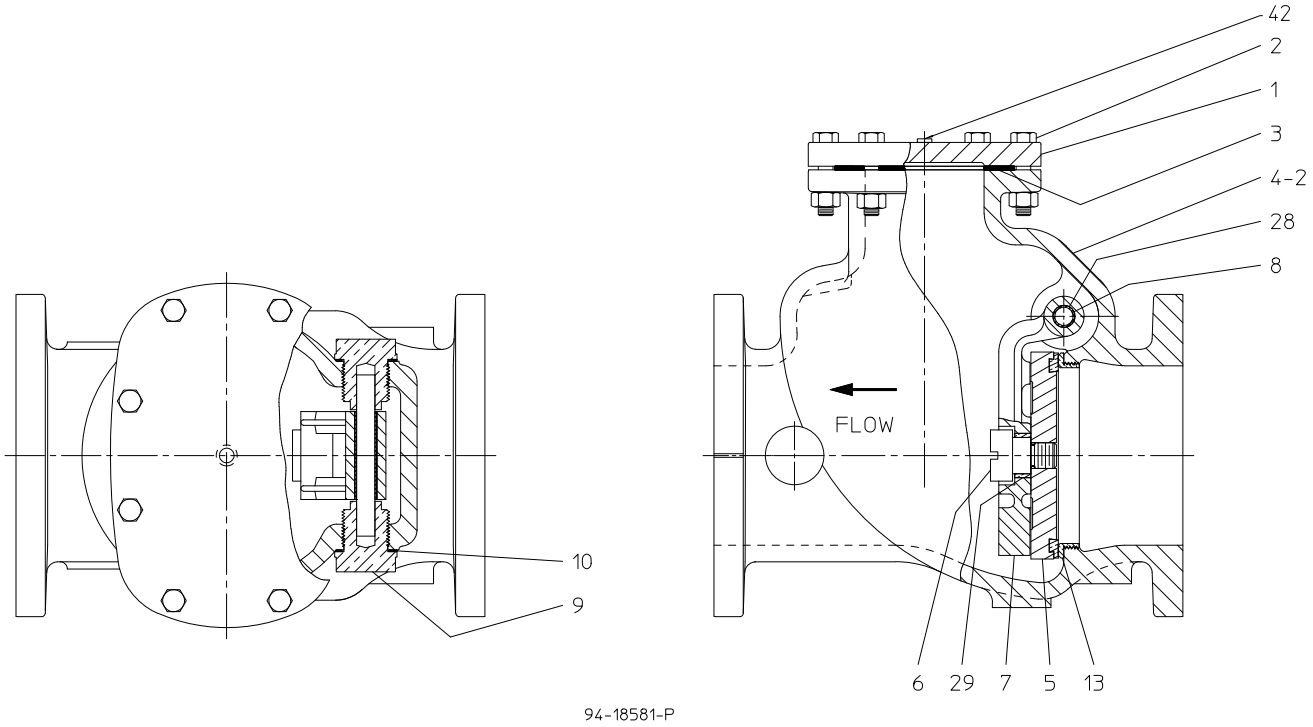

Ref. No.	Description	Material	Quantity
1	Bonnet	Gray Iron (See Note 4)	1
2	Bonnet Bolt & Nut	0304 Stainless Steel	Varies
3	Bonnet Gasket	Composition Rubber	1
4-2	Flanged End Case	Gray Iron (See Note 4)	1
5	Disc	See Note 5	1
6	Disc Stud	Bronze	1
7	Clapper Arm	Ductile Iron	1
8	Clapper Arm Shaft	Stainless Steel	1
9	Retainer Plug	Bronze	2
10	Retainer Plug Gasket	Composition Rubber	2
13	Seat Ring	Bronze	1
28	Shaft Bushing	Bronze (See Note 6)	1
29	Disc Stud Bushing	Bronze	1

NOTES:
1. Construction, materials and testing comply with ANSI/AWWA C508.
2. Bolt patterns of Class 125 flanged ends are in accordance with ANSI/AWWA C110/A21.10 (ASME B16.1 Class 125).
3. Valves have manufacturer's name, pressure class and year of manufacture cast on side of case.
4. All gray iron is ASTM A126 Class B.
5. Discs on 3 in. are bronze, 4 in. and above are gray iron with bronze face disc that has lug on O.D. to prevent rotation.
6. Shaft bushings for valves 3 in.–10 in. are bronze, 12 in.–16 in. are nylon with molybdenum disulphide uniformly dispersed.
7. Certified to NSF/ANSI 61 & 372.

SERIES 52-SC LEVER AND WEIGHT PARTS LIST

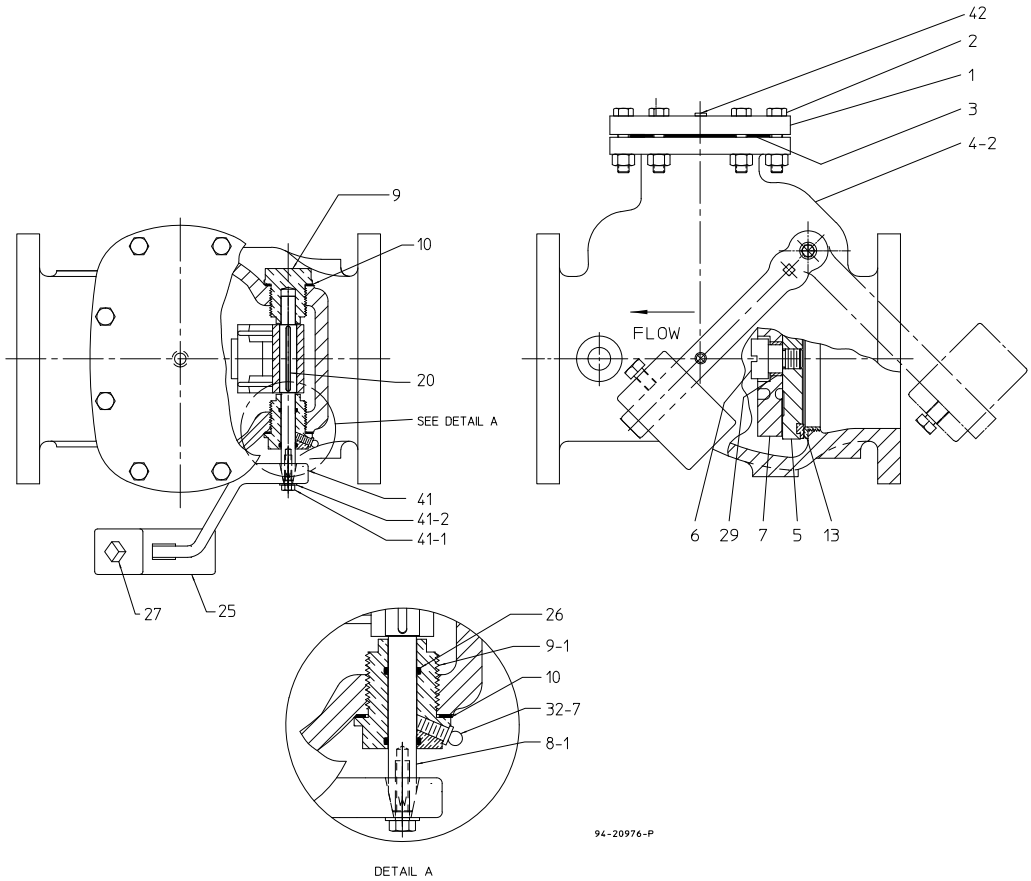

Ref. No.	Description	Material	Qty.
1	Bonnet	Gray Iron	1
2	Bonnet Bolt & Nut	0304 Stainless Steel	Varies
3	Bonnet Gasket	Composition Rubber	1
4-2	Flanged Ends Case	Gray Iron	1
5	Disc	(See Note 6)	1
6	Disc Stud	Bronze	1
7-1	Clapper Arm for Lever	Ductile Iron	1
8-1	Clapper Arm Shaft Assembly	Stainless Steel (See Note 5)	1
9	Retainer Plug	Bronze	1
9-1	Retainer Plug for Lever	Bronze	1
10	Retainer Plug Gasket	Composition Rubber	2
13	Seat Ring	Bronze	1
20	Shaft Key	Stainless Steel	1
25	Weight for Lever	Gray Iron	1
26	O-ring	Rubber	2
27	Weight Set Screw	0304 Stainless Steel	1
29	Disc Stud Bushing	Bronze	1
32-7	Grease Fitting	Steel	1
41	Lever	Ductile Iron	1
41-1	Lever Bolt	0304 Stainless Steel	1
41-2	Lever Washer	0304 Stainless Steel	1

1. Construction, materials and testing comply with ANSI/AWWA C508.
2. Bolt patterns of Class 125 flanged ends are in accordance with ANSI/AWWA C110/A21.10 (ASME B16.1 Class 125).
3. Valves have manufacturer's name, pressure class and year of manufacture cast on side of case.
4. All gray iron is ASTM A126 Class B.
5. Clapper arm shaft is stainless steel. As-sembly includes lever, bolt, washer and key.
6. Disc on 3 in. is bronze. 4 in. and above are gray iron with bronze face. Disc has lug on O.D. to prevent rotation.
7. Lever is furnished on side and position shown unless otherwise specified. Lever shown by dot and dash lines is the position furnished when valve is to be installed in a vertical line with upward flow for lever and weight.

Certified to NSF/ANSI 61 & 372.

SERIES 52-SC LEVER AND SPRING PARTS LIST

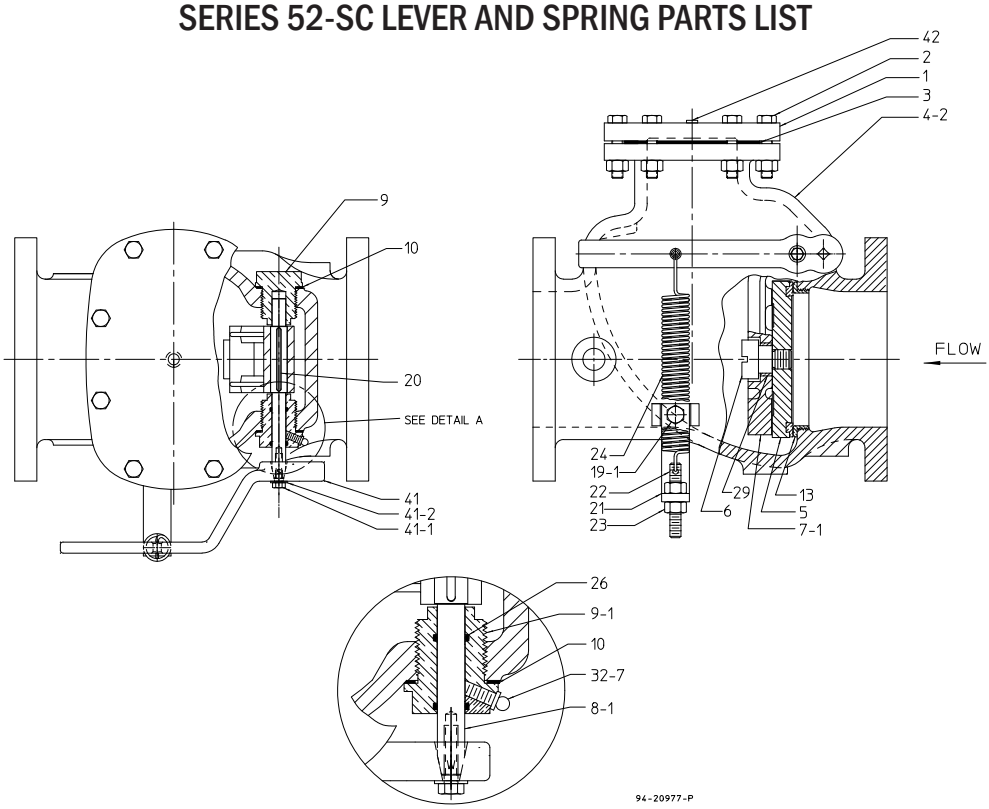

Ref. No.	Description	Material	Qty.
1	Bonnet	Gray Iron	1
2	Bonnet Bolt & Nut	0304 Stainless Steel	Varies
3	Bonnet Gasket	Composition Rubber	1
4-2	Flanged Ends Case	Gray Iron	1
5	Disc	(See Note 6)	1
6	Disc Stud	Bronze	1
7-1	Clapper Arm for Lever	Ductile Iron	1
8-1	Clapper Arm Shaft Assembly	Stainless Steel (See Note 5)	1
9	Retainer Plug	Bronze	1
9-1	Retainer Plug for Lever	Bronze	1
10	Retainer Plug Gasket	Composition Rubber	2
13	Seat Ring	Bronze	1
19-1	Bracket Cap Screw	0304 Stainless Steel	1
20	Shaft Key	Stainless Steel	1
21	Spring Bracket	Steel	1
22	Spring Link	0304 Stainless Steel	1
23	Link Nut	0304 Stainless Steel	2
24	Spring for Lever	Steel	1
26	O-ring	Rubber	2
29	Disc Stud Bushing	Bronze	1
32-7	Grease Fitting	Steel	1
41	Lever	Ductile Iron	1
41-1	Lever Bolt	0304 Stainless Steel	1
41-2	Lever Washer	0304 Stainless Steel	1

1. Construction, materials and testing comply with ANSI/AWWA C508.
2. Bolt patterns of Class 125 flanged ends are in accordance with ANSI/AWWA C110/A21.10 (ASME B16.1 Class 125).
3. Valves have manufacturer's name, pressure class and year of manufacture cast on side of case.
4. All gray iron is ASTM A126 Class B.
5. Clapper arm shaft is stainless steel. Assembly includes lever, bolt, washer and key.
6. Disc on 3 in. is bronze. 4 in. and above are gray iron with bronze face. Disc has lug on O.D. to prevent rotation.
7. Lever is furnished on side and position shown unless otherwise specified.
8. Certified to NSF/ANSI 61 & 372.

INDEX

SERIES 600 SWING CHECK VALVE

PAGE

INTRODUCTION 7C-2
FEATURES AND BENEFITS 7C-3
SPECIFICATIONS 7C-3
ORDERING
Dimensions:
Standard 7C-4
Lever and Weight 7C-5
Lever and Spring 7C-6
Optional Tap Locations 7C-7
Weights 7C-8
Submittal Sheet 7C-9

INSTALLATION AND MAINTENANCE 7C-10
REPAIRS
Parts Lists:
Standard 7C-11
Lever and Weight 7C-12
Lever and Spring 7C-13

WATEROUS SERIES 600 SWING CHECK VALVE

AMERICAN Flow Control's Waterous Series 600 Swing Check Valves are in full compliance with ANSI/AWWA C508 with a rated working pressure of 200 psig. Configurations are available that are UL Listed with a rated working pressure of 175 psig.

Waterous Series 600 swing check valves feature sturdy iron body and bronze mounted construction. This design provides extensive use of corrosion resistant materials in places where corrosion may be a problem.

FEATURES AND BENEFITS

AMERICAN Flow Control's Waterous Series 600 Swing Check Valves are in full compliance with ANSI/AWWA C508 with a rated working pressure of 200 psig. Configurations are available that are UL Listed with a rated work-ing pressure of 175 psig.

The check valve is suitable for horizontal installation or vertical installation when the flow of water is in an upward direction.

Waterous Series 600 swing check valves feature sturdy iron body and bronze mounted construction. This design provides extensive use of corrosion resistant materials for installations where corrosion may be a problem.

RESILIENT SEATED DISC

The disc is constructed of high-strength bronze with a rubber seal recessed into the disc to assure a positive seal, even under low pressure.

Series 600 swing check valves are available in sizes 3 in. - 12 in. In addition to standard configurations, they are available with lever and spring or lever and weight for applications where rapid flow reversals may be encountered.

CORROSION RESISTANT

The clapper arm is made of high-strength bronze. The check valve disc and clapper arm assembly use corrosion resistant bearings, bushings and washers to reduce wear and assure long operating life.

FULL WATERWAY

These check valves are designed to provide a "Full Waterway" per MSS SP-71, Type I. Swing check valves with Full Waterway, when fully open, have waterway cross-sectional area at any point, that is at least equal to the area of a circle whose diameter is the nominal valve size.

AMERICAN Flow Control **Waterous Series 600 Swing Check Valves** have these features:

- Comply with ANSI/AWWA C508
- Stainless Steel Clapper Arm Shaft
- Full Waterway per Type I of MSS SP-71
- Bronze Clapper Arm
- Resilient Seated Disc
- Stainless Steel Body to Bonnet Bolting
- Available UL Listing
- Optional Fusion-Bonded Epoxy Coating Inside and Out
- Certified to NSF/ANSI Standard 61 and NSF/ANSI 372.

SPECIFICATIONS

Swing check valves shall be Waterous Series 600 by AMERICAN Flow Control. Check valves shall be manufactured from gray cast iron meeting or exceeding ASTM A126, Grade B. Check valves shall comply with ANSI/AWWA C508, latest revision, UL Listed and include the following features:

Check valves shall be designed with full waterway opening per Type I of MSS SP-71.

Check valve disc and clapper arm assembly shall be removable from the check valve body without having to remove the check valve from the pipeline.

All body to bonnet fasteners shall be Type 304 Stainless Steel.

Disassembly of valve internals shall require no special tools other than standard socket wrenches.

Check valve disc and clapper arm assembly shall be assembled using corrosion resistant bearings, bushings and washers to reduce wear and increase service life.

Clapper arm shall be constructed of high-strength bronze. Clapper arm shaft shall be stainless steel.

Disc shall be constructed of bronze with a Nitrile rubber seal recessed into the disc face to provide a positive seal against the mating bronze body seat ring.

In applications where slam surge may occur, check valves can be furnished with outside lever and weight or spring.

SERIES 600 - STANDARD DIMENSIONS

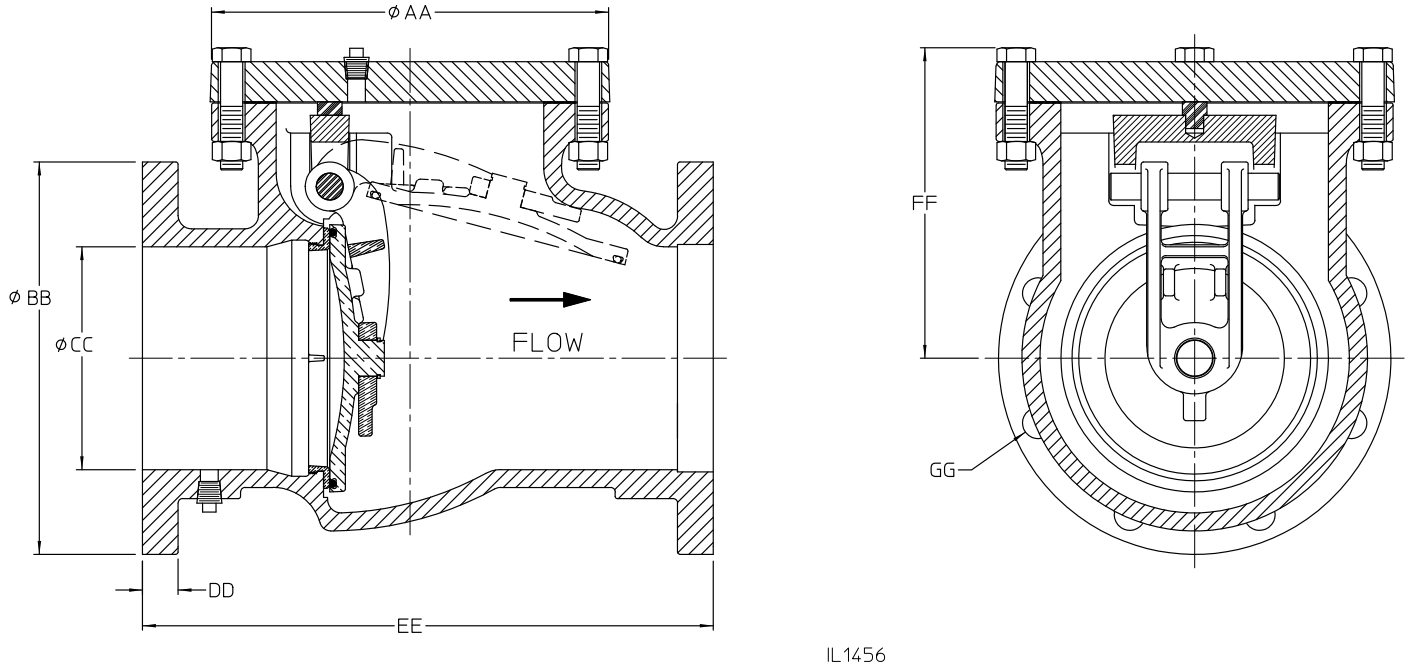

Valve Size	AA	BB	CC	DD	EE	FF	GG		
							Holes	Size	Bolt Circle
3”	8.50	7.50	3.12	0.75	11.00	7.12	4	0.75	6.00
4”	8.38	9.00	4.12	0.94	13.00	6.81	8	0.75	7.50
6”	11.12	11.00	6.25	1.00	16.00	8.50	8	0.88	9.50
8”	14.00	13.50	8.12	1.12	19.50	10.19	8	0.88	11.75
10”	15.25	16.00	10.12	1.19	22.00	12.00	12	1.00	14.25
12”	18.00	19.00	12.12	1.25	26.00	12.38	12	1.00	17.00

SERIES 600 - LEVER AND WEIGHT DIMENSIONS
(RIGHT HAND OUTSIDE SHAFT SHOWN)

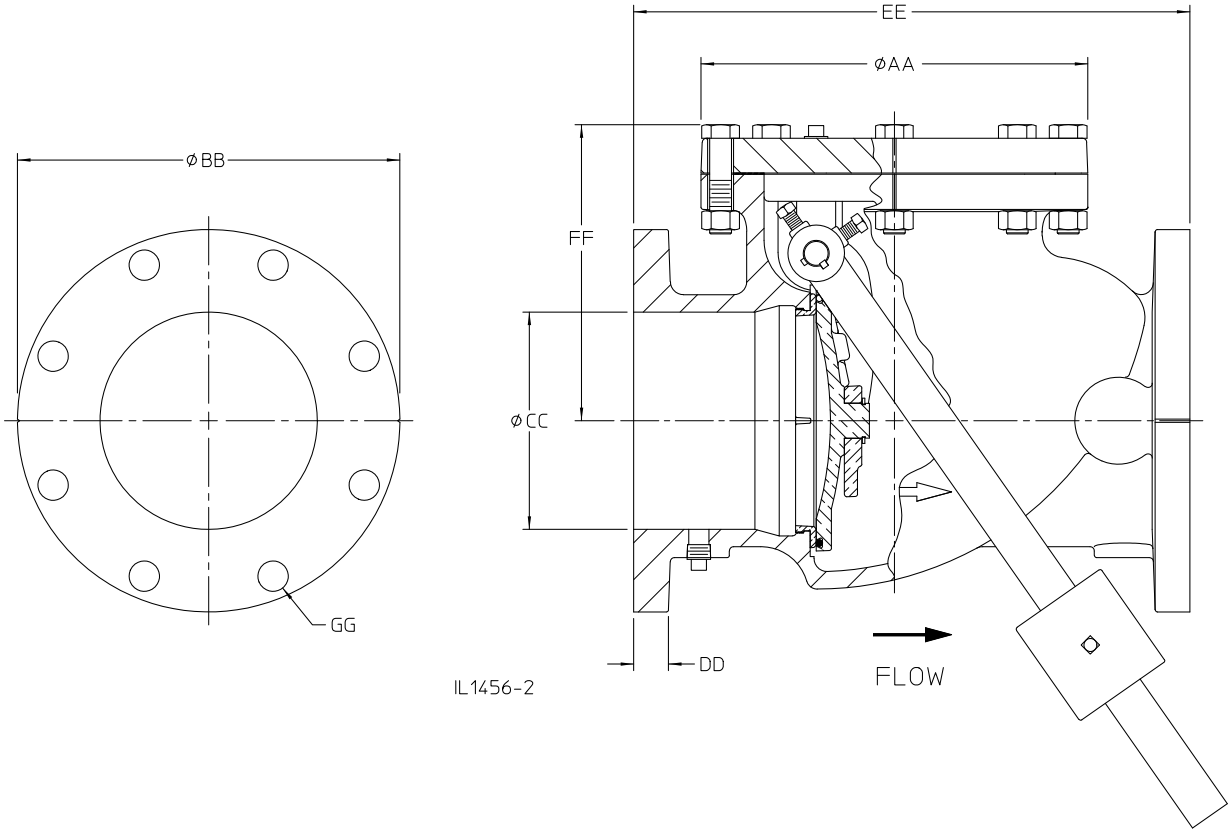

Valve Size	AA	BB	CC	DD	EE	FF	GG		
							Holes	Size	Bolt Circle
3”	8.50	7.50	3.12	0.75	11.00	7.12	4	0.75	6.00
4”	8.38	9.00	4.12	0.94	13.00	6.81	8	0.75	7.50
6”	11.12	11.00	6.25	1.00	16.00	8.50	8	0.88	9.50
8”	14.00	13.50	8.12	1.12	19.50	10.19	8	0.88	11.75
10”	15.25	16.00	10.12	1.19	22.00	12.00	12	1.00	14.25
12”	18.00	19.00	12.12	1.25	26.00	12.38	12	1.00	17.00

SERIES 600 - LEVER AND SPRING DIMENSIONS
(RIGHT HAND OUTSIDE SHAFT SHOWN)

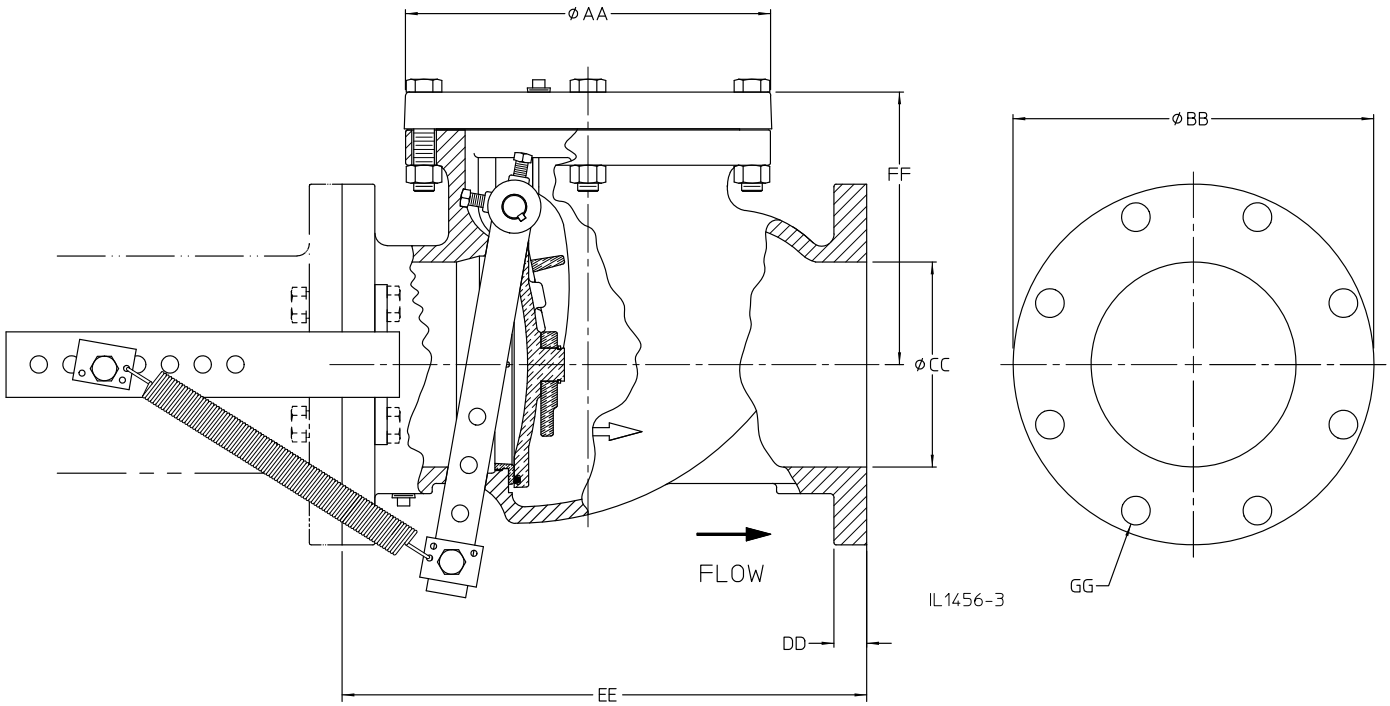

Valve Size	AA	BB	CC	DD	EE	FF	GG		
							Holes	Size	Bolt Circle
3”	8.50	7.50	3.12	0.75	11.00	7.12	4	0.75	6.00
4”	8.38	9.00	4.12	0.94	13.00	6.81	8	0.75	7.50
6”	11.12	11.00	6.25	1.00	16.00	8.50	8	0.88	9.50
8”	14.00	13.50	8.12	1.12	19.50	10.19	8	0.88	11.75
10”	15.25	16.00	10.12	1.19	22.00	12.00	12	1.00	14.25
12”	18.00	19.00	12.12	1.25	26.00	12.38	12	1.00	17.00

SERIES 600 - OPTIONAL TAP LOCATIONS

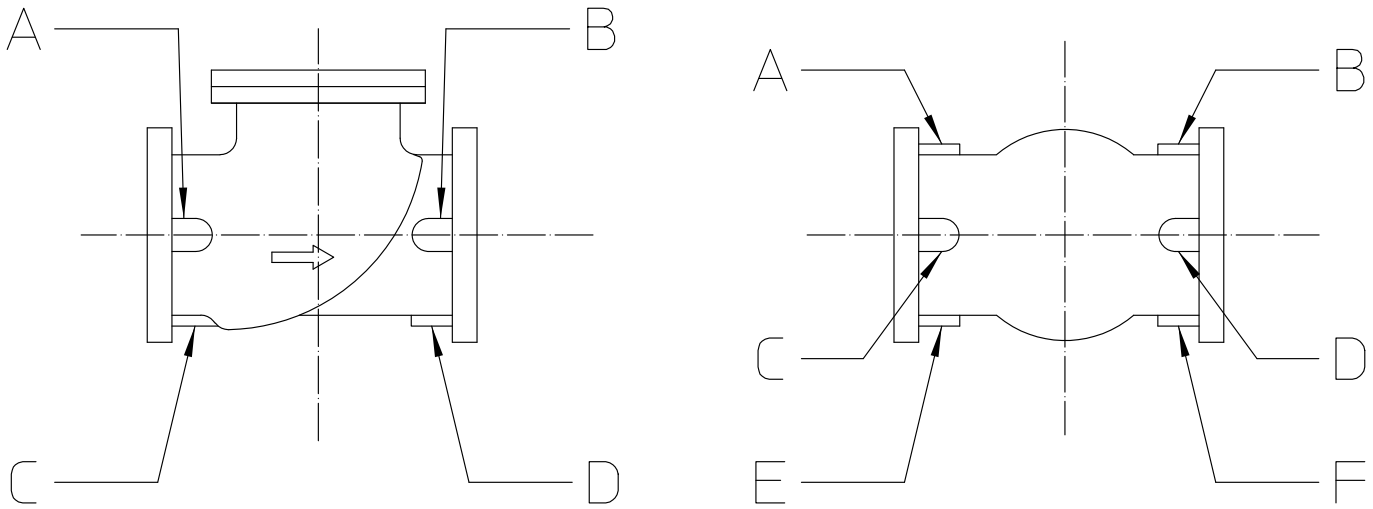

IL1456-1

Valve Size	Maximum Tap Size for Bosses	
	A, B, E & F	C, D
3”	3/4 NPT	3/4 NPT
4”	3/4 NPT	1/2 NPT
6”	1-1/4 NPT	3/4 NPT
8”	1-1/2 NPT	1/2 NPT
10”	2 NPT	3/4 NPT
12”	2 NPT	3/4 NPT

SERIES 600 - WEIGHTS

Valve Size	Standard	Lever / Spring or Weight
3”	60	70
4”	75	85
6”	145	160
8”	245	260
10”	380	405
12”	500	525

NOTE: All weights are in pounds.

AMERICAN Flow Control®
SERIES 600 SWING CHECK VALVE

SUBMITTAL SHEET

QTY	3”	4”	6”	8”	10”	12”

☐ Standard (UL Listed)
☐ Lever and Weight*
☐ Lever and Spring*
* AWWA Only

Also Specify Lever Side of Valve)
(As Viewed Looking at Valve Inlet)
☐ Left Side ☐ Right Side

Optional Body Tap: Size _____
Location _____

Other Requirements (List)

AMERICAN Flow Control®
American-Darling Valve and Waterous
A Division of AMERICAN

NOTES:
1. Series 600 valves meet or exceed requirements of ANSI/AWWA C508.
2. Series 600 valves have 200 psig AWWA rated working pressure and 175 psig UL rated working pressure.
3. May be furnished in configurations that are UL Listed.
4. Series 600 valves are available with the interior and exterior of the valve coated with fusion-bonded epoxy in accordance with ANSI/AWWA C550.

Visit our web site at http://www.american-usa.com/afc

INSPECTION ON DELIVERY

When shipment arrives, check for shortages, breakage, external damage, etc. Note all such claims on delivery ticket.

Any damage or shortage should be reported immediately to the truck driver, noted on the bill of lading and signed by the driver on your copy.

Carefully unload all valves - **DO NOT DROP.**

STORAGE

Valves are normally palletized when shipped which helps provide protection from weather during storage. If the pallet is disbanded and valves removed, remaining valves should be stored in an upright position with bulkhead flange on top or stored protected from the weather.

INSPECTION

Make sure the valve end flange gasket surfaces are clean and free of damage.

Clean inside of the valve to remove all contaminants that may affect water system purity. Check clapper O-ring. Check for free movement of clapper and seal fit.

INSTALLATION

Handle the valve carefully, check cover bolts for tightness. Ensure that the disc swings freely from closed to open and back again.

Be sure that the piping is properly supported to avoid stress on the valve. Make sure that the piping is properly aligned and spaced so the bolting of the valve in the line is not used to correct any errors in piping alignment or spacing.

Check valves should be installed in accordance with Standard Practic MSS SP-92.

Install valve with direction of flow arrows pointing in the direction the water will be flowing. Water flow must be horizontal or vertically upward through valve waterway.

To reduce check valve slamming, the valves supplied with the optional outside shaft configuration may be equipped with either a lever and weight or a lever and spring option. The principle behind these options is to close the check valve before the fluid establishes a reverse flow. The amount of closing torque required will vary with each system and can be adjusted by changing the number and position of the weights or springs.

Install lever and spring per instruction I-1043 for one spring and I-1044 for two springs. Optional three and four spring kits are available upon request.

The lever and weight arm has two keyways: one for valve waterway horizontal and one for valve waterway vertical.

MAINTENANCE

Normally there is no maintenance required on the check valve. If the valve begins to operate improperly, it may be necessary to remove the valve cover and inspect the internal disc and arm mechanism.

WARNING: Special care should be taken in the installation, inspection and repair of pressure containing devices such as valves and hydrants. FAILURE TO FOLLOW PROPER PRACTICE AND GUIDELINES CAN RESULT IN SERIOUS INJURY OR DEATH. Do not make repairs while check valve is under pressure.

Remove any debris that may by hung up in the valve and ensure that all moving parts operate freely before reassembling the valve. Repair or replace parts as necessary to return the valve to good working order.

GENERAL NOTES

These reference materials are available and should be helpful in the installation and testing of Swing Check Valves:

- ANSI/AWWA C508 - Swing Check Valves for Waterworks Service.

All installation, operation and maintenance instructions are issued by the manufacturer of the pipe and the valves.

- Valve user guide as published by MSS.
- NFPA-24 - Installation of Private Fire Service Mains and Their Appurtenances.

These industry practices have been listed to help you make a safe and acceptable installation of a swing check valve.

SERIES 600 - STANDARD PARTS LIST

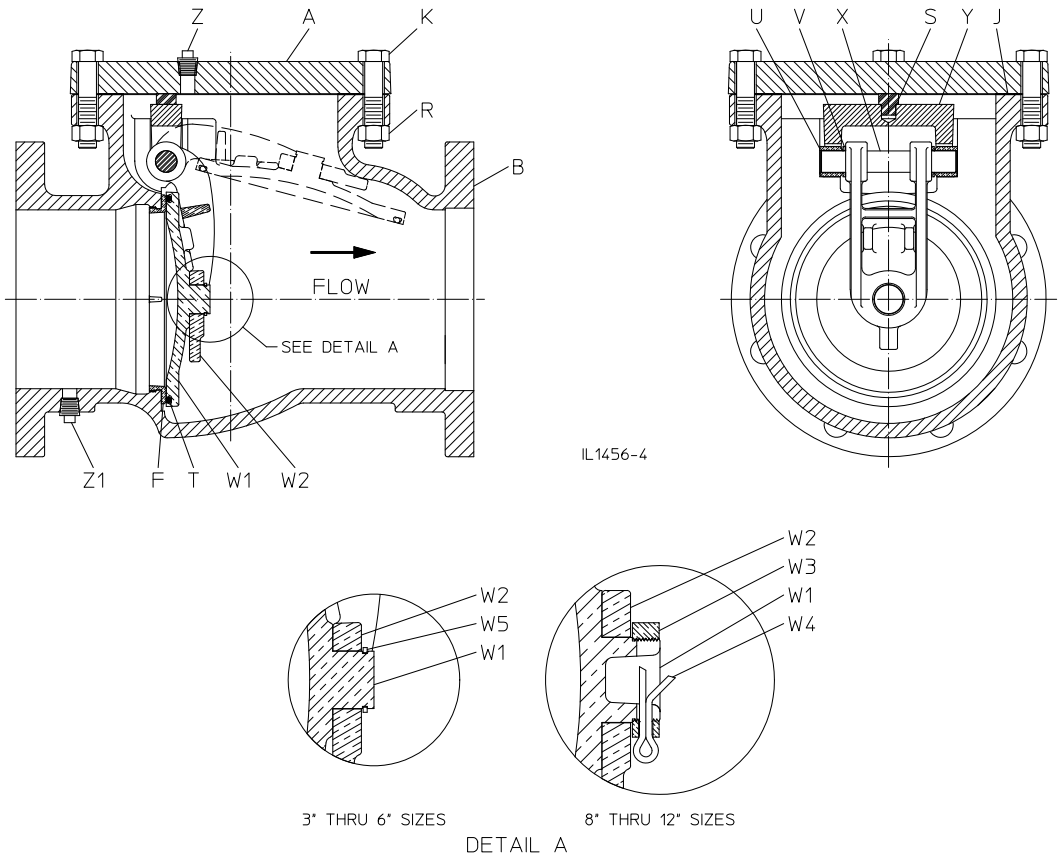

Ref.	Description	Material
A	Cover	Gray Iron
B	Valve Body	Gray Iron
F	Body Seat Ring	Bronze
J	Cover Gasket	Synthetic Fiber with Elastomeric Rubber
K	Hex Head Bolt	Stainless Steel
R	Hex Nut	Stainless Steel
S	Bumper	Rubber
T	O-ring	Rubber
U	Bushing	Brass
V	Shim Washer	Brass
W1	Disc	Bronze
W2	Arm	Bronze
W3	Locknut	Bronze
W4	Cotter Pin	Stainless Steel
W5	Snap Ring	Stainless Steel
X	Shaft	Stainless Steel
Y	Yoke	Gray Iron
Z	Pipe Plug	Stainless Steel
Z1	Pipe Plug	Bronze

SERIES 600 - LEVER AND WEIGHT PARTS LIST

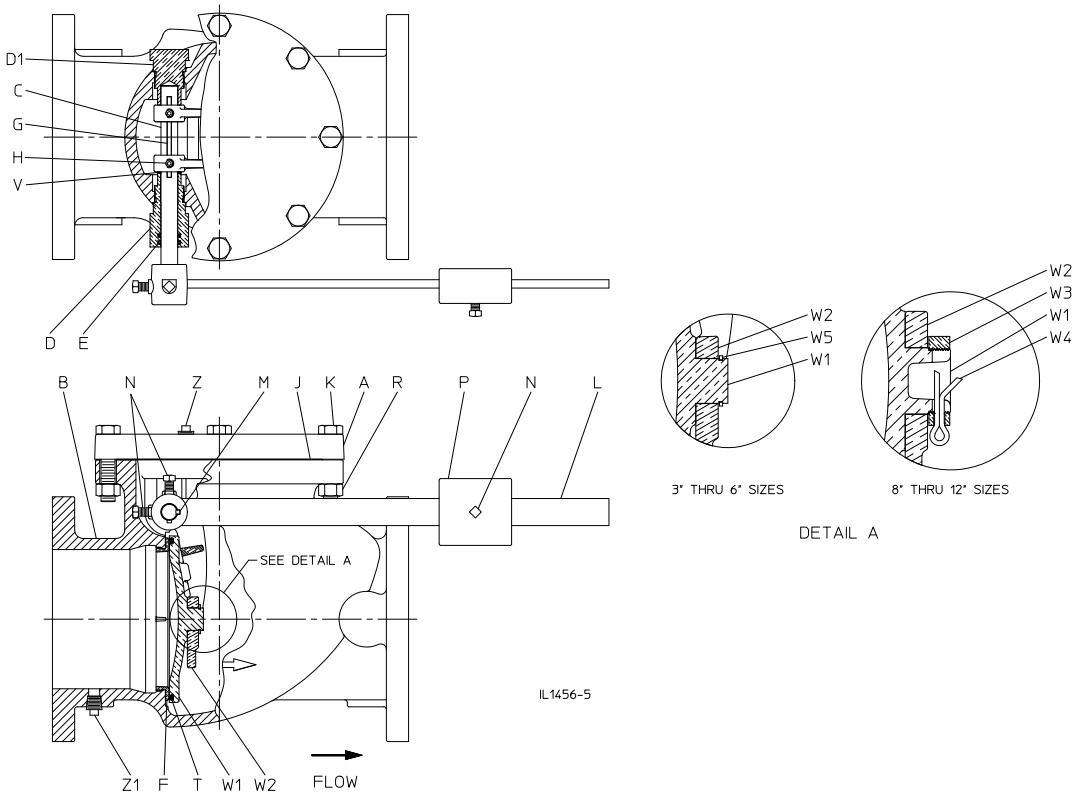

Ref.	Description	Material
A	Cover	Gray Iron
B	Valve Body	Gray Iron
C	Shaft	Stainless Steel
D	Shaft Support	Bronze
D1	Shaft Retiainer	Bronze
E	O-ring	Rubber
F	Body Seat Ring	Bronze
G	Arm Key	Stainless Steel
J	Cover Gasket	Synthetic Fiber with Elastomeric Rubber
K	Hex Head Bolt	Stainless Steel
L	Weight Lever	Bronze
M	Lever Key	Stainless Steel
N	Square Head Set Screw	Steel
P	Weight	Gray Iron
R	Hex Nut	Stainless Steel
T	O-ring	Rubber
V	Shim Washer	Brass
W1	Disc	Bronze
W2	Arm	Bronze
W3	Locknut	Bronze
W4	Cotter Pin	Stainless Steel
W5	Snap Ring	Stainless Steel
Z	Pipe Plug	Stainless Steel
Z1	Pipe Plug	Bronze

SERIES 600 - LEVER AND SPRING PARTS LIST

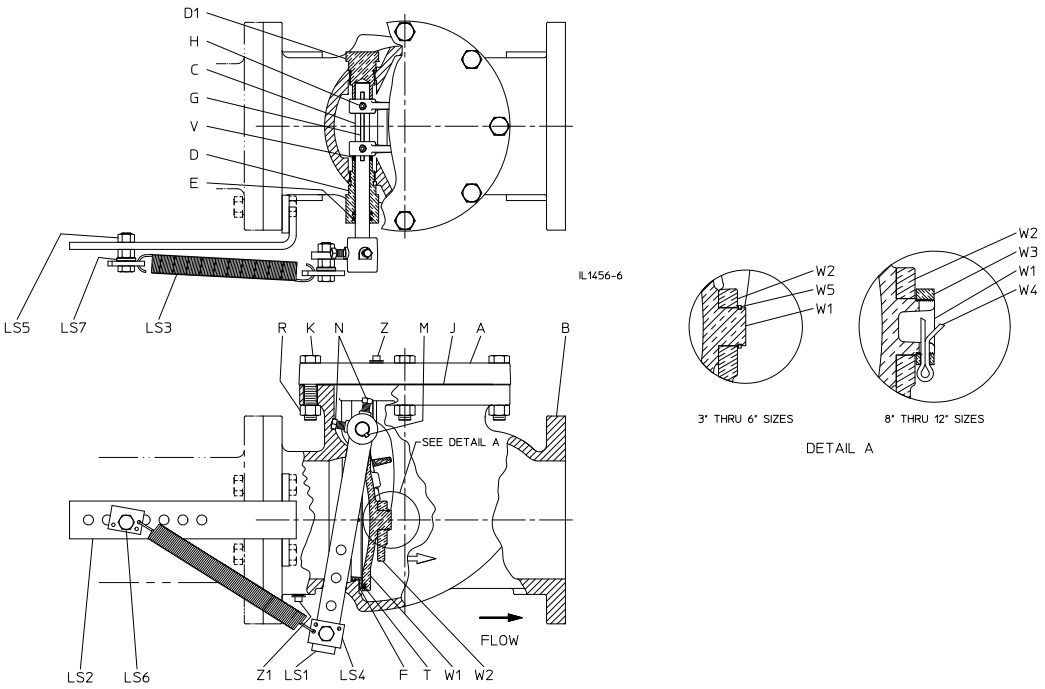

Ref.	Description	Material
A	Cover	Gray Iron
B	Valve Body	Gray Iron
C	Shaft	Stainless Steel
D	Shaft Support	Bronze
D1	Shaft Retiainer	Bronze
E	O-ring	Rubber
F	Body Seat Ring	Bronze
G	Arm Key	Stainless Steel
H	Socket Head Set Screw	Steel
J	Cover Gasket	Synthetic Fiber with Elastomeric Rubber
K	Hex Head Bolt	Stainless Steel
LS1	Spring Lever	Bronze
LS2	Bracket	Steel
LS3	Spring	Stainless Steel
LS4	Spring Plate	Steel
LS5	Hex Nut	Plated Steel
LS6	Hex Head Bolt	Plated Steel
LS7	Spacer	Steel
M	Lever Key	Stainless Steel
N	Square Head Set Screw	Steel
R	Hex Nut	Stainless Steel
T	O-ring	Rubber
V	Shim Washer	Brass
W1	Disc	Bronze
W2	Arm	Bronze
W3	Locknut	Bronze
W4	Cotter Pin	Stainless Steel
W5	Snap Ring	Stainless Steel
Z	Pipe Plug	Stainless Steel
Z1	Pipe Plug	Bronze

AMERICAN Flow Control

SECTION 8

TRENCH ADAPTER®

AMERICAN
FLOW CONTROL

THE RIGHT WAY

INDEX

TRENCH ADAPTER®

PAGE

INTRODUCTION 8-2
FEATURES AND BENEFITS 8-3
SPECIFICATIONS 8-3
ORDERING
Dimensions:
Overall Dimensions and Weights 8-4
Trench Depth and Model Number 8-5
Accessories 8-6
Submittal Sheet 8-7

INSTALLATION
Installation 8-8
Extending 8-8

Parts Lists:
Trench Adapter 8-9
Accessories 8-10

TRENCH ADAPTER®

AMERICAN Flow Control's Trench Adapter is a fully adjustable valve box and extension stem system that is available in trench depths ranging from 3 ft - 20 ft. Both the valve box and the extension stem adjust to grade in a matter of seconds, completely eliminating the need to cut extension stems in the field.

Features

AMERICAN Flow Control's Trench Adapter is a fully adjustable valve box and extension stem system that is available in trench depths ranging from 3 ft to 20 ft. Both the valve box and the extension stem adjust to grade in a matter of seconds, completely eliminating the need to cut extension stems in the field. You simply raise the upper pipe to the proper height and lock it into position. Now you have not only adjusted the height of the valve box, but you have also raised the extension stem and operating nut to grade as well. This adjustment is accomplished by the use of a coupling gland. which includes a split O-ring, that when hand tightened, locks the Trench Adapter to the desired depth.

The Trench Adapter eliminates the problems of trying to locate and engage the operating nut on the valve. With conventional valve boxes, the valve operating nut is several feet below grade making it difficult to locate and to align the T-handle wrench on the operating nut.

This is especially difficult if the valve box is filled with debris, mud and water. The Trench Adapter assures that the valve can be operated at ground level. Simply remove the lid and the operating nut is accessible and ready to use.

The grit and stem washers support the extension stem in the top section of the valve box. The grit washer is designed to keep gravel and debris from entering the valve box interior. The valve box locking lid is color coded and includes cast markings to indicate potable water, sewer, re-use water, gas or fire.

Benefits

- Quick and easy height adjustment
- Built-in extension stem automatically adjusts to the same height as the valve box
- Eliminates field cut extension stems
- Operating nut will always be at groundline, so it saves time in operating the valve. This is especially important in emergency situations
- Eliminates the need for long T-handle wrench
- Alignment ring helps prevent the box from resting against the operating nut of the valve during backfill, rendering the valve inoperable
- Extension stem has been proof-of-design tested to 1000 ft-lb of torque without failure
- Valve box is sealed from mud, dirt and gravel
- Top extensions are available for height adjustment should there be a grade change
- Iron, galvanized steel and high-strength, thick-wall polyethylene construction for durability

Added Value

Each Trench Adapter includes AMERICAN Flow Control's self-centering Alignment Ring. This two-piece ring installs in seconds and locks in place under the wrench nut of the main valve. The Alignment Ring centers the valve box over the valve. The sides of the Alignment Ring are 1-1/2 in. high, which aid in keeping the valve box in a vertical position while backfilling the trench. This makes correct installation of a valve box easier than ever before. The AMERICAN Flow Control Alignment Ring can be purchased separately for use with standard valve boxes.

Specifications

Valve boxes shall be provided for all buried valves. Valve boxes shall be a complete assembled unit composed of the valve box, extension stem, a valve centering ring, debris washer and lockable lid. All moving parts of the extension stem shall be enclosed in a housing to prevent contact with the soil. Valve box assembly shall be adjustable to accommodate variable trench depths without field cutting the box.

The stem assembly shall be of a telescoping design that allows for variable adjustment length. The material shall be galvanized square steel tubing. The stem assembly shall have a built-in device that prevents the stem assembly from disengaging at its fully extended length. The extension stem must be capable of surviving a torque test to 1000 ft-lb without failure. Valve box shall be AMERICAN Flow Control's Trench Adapter.

TRENCH ADAPTER® - DIMENSIONS

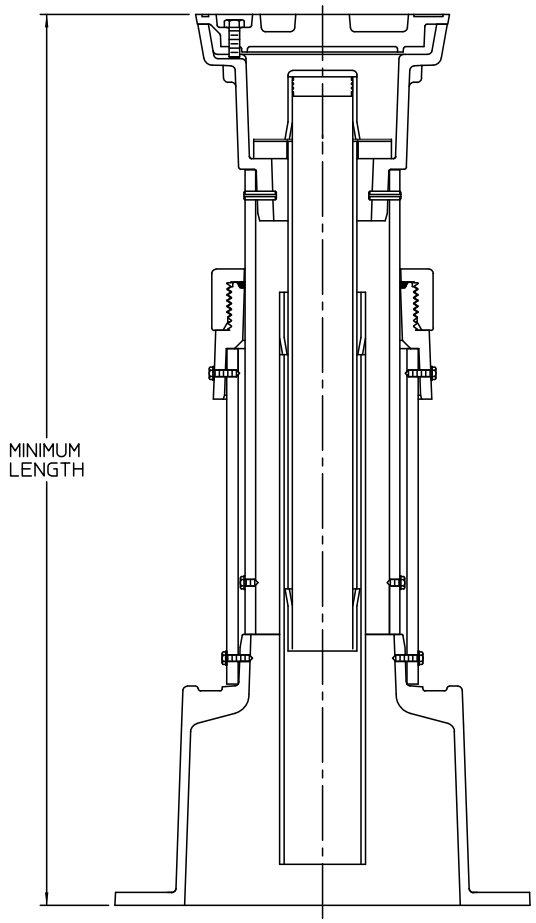

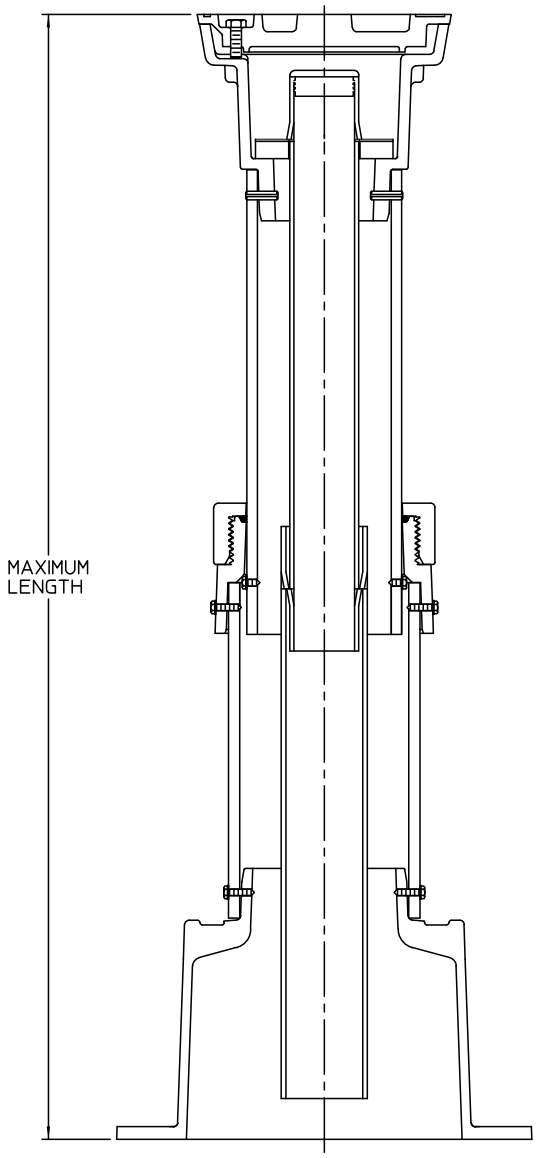

Model Number	Length		Assembly Weight
	Minimum	Maximum	
1	18.25	20.25	29 LBS
2	22.25	28.25	32 LBS
3	24.75	32.50	35 LBS
4	29.75	40.50	39 LBS
5	37.75	56.50	48 LBS
6	49.75	80.50	54 LBS
7	73.75	128.50	72 LBS
8	127.75	179.75	99 LBS
9	178.75	230.75	127 LBS

NOTE:
1. On model numbers 1 through 9, the extension stem is optional

TRENCH ADAPTER® - DIMENSIONS

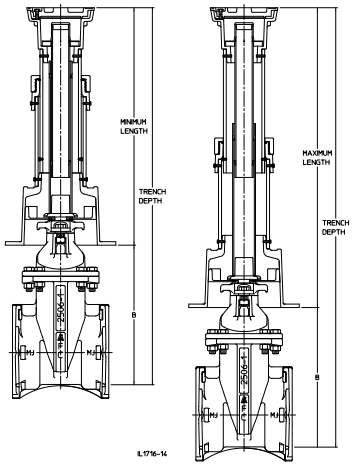

Valve size	Trench Depth and Model Number																			
	2'0"	2'6"	3'0"	3'6"	4'0"	4'6"	5'0"	5'6"	6'0"	6'6"	7'0"	7'6"	8'0"	8'6"	9'0"	9'6"	10'0"	10'6"	11'0"	11'6"
2"	1	2	3,4	4	5	5	6	6	6	6	7	7	7	7	7	7	7	7	7	8
2-1/2"	-	2	3	4	5	5	5,6	6	6	6	6,7	7	7	7	7	7	7	7	7	8
3"	-	2	2,3	4	5	5	5,6	6	6	6	6,7	7	7	7	7	7	7	7	7	8
4"	-	1	3	4	4,5	5	5,6	6	6	6	6	7	7	7	7	7	7	7	7	8
6"	-	-	2	3	4	5,4	5	5,6	6	6	6	6	7	7	7	7	7	7	7	7
8"	-	-	-	2	3,4	4	5	5	6	6	6	6	6	7	7	7	7	7	7	7
10"	-	-	-	1	2	3,4	4	5	5	6	6	6	6	7	7	7	7	7	7	7
12"	-	-	-	-	1	2,3	3,4	4,5	5	5	6	6	6	6	7	7	7	7	7	7
14"	-	-	-	-	-	-	2	3	4	5	5	5	6	6	6	6	7	7	7	7
16"	-	-	-	-	-	-	1	2	3,4	4	5	5	6	6	6	6	7	7	7	7
18"	-	-	-	-	-	-	-	-	2,3	4	4	5	5	6	6	6	6	7	7	7
20"	-	-	-	-	-	-	-	-	-	2,3	4	4	5	5	6	6	6	6	7	7
24"	-	-	-	-	-	-	-	-	-	-	2	3	4	5	5	5	6	6	6	6

Valve Size	Trench Depth and Model Number																
	12'0"	12'6"	13'0"	13'6"	14'0"	14'6"	15'0"	15'6"	16'0"	16'6"	17'0"	17'6"	18'0"	18'6"	19'0"	19'6"	20'0"
2"	8	8	8	8	8	8	8	9	9	9	9	9	9	9	9	9	-
2-1/2"	8	8	8	8	8	8	8	8,9	9	9	9	9	9	9	9	9	-
3"	8	8	8	8	8	8	8	8	9	9	9	9	9	9	9	9	-
4"	8	8	8	8	8	8	8	8	9	9	9	9	9	9	9	9	9
6"	8	8	8	8	8	8	8	8	8	9	9	9	9	9	9	9	9
8"	7	8	8	8	8	8	8	8	8	8	9	9	9	9	9	9	9
10"	7	7	8	8	8	8	8	8	8	8	9	9	9	9	9	9	9
12"	7	7	8	8	8	8	8	8	8	8	8	9	9	9	9	9	9
14"	7	7	7	7	8	8	8	8	8	8	8	9	9	9	9	9	9
16"	7	7	7	7	7	8	8	8	8	8	8	8	8	9	9	9	9
18"	7	7	7	7	7	8	8	8	8	8	8	8	8	8	9	9	9
20"	7	7	7	7	7	7	8	8	8	8	8	8	8	8	8	9	9
24"	7	7	7	7	7	7	7	7	8	8	8	8	8	8	8	8	8

Where two model numbers are shown for a given valve/trench combination, use the dimensions in the table below to select the best fit.

Model Number	Length	
	Minimum	Maximum
1	18.25	20.25
2	22.25	28.25
3	24.75	32.50
4	29.75	40.50
5	37.75	56.50
6	49.75	80.50
7	73.75	128.50
8	127.75	179.75
9	178.75	230.75

Model	Valve Size	Dimension "B"
Series 2500	2"	4.75
	2-1/2"	7.00
	3"	8.13
Series 2500-1	4"	9.78
	6"	13.88
	8"	18.53
	10"	22.94
	12"	27.59.
Series 2500	14"	36.50
	16"	41.00
	18"	45.00
	20"	50.50
	24"	61.00

TRENCH ADAPTER® ACCESSORIES - DIMENSIONS

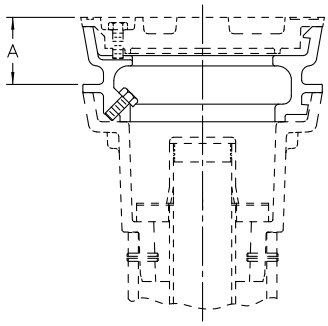

2-INCH TOP EXTENSION

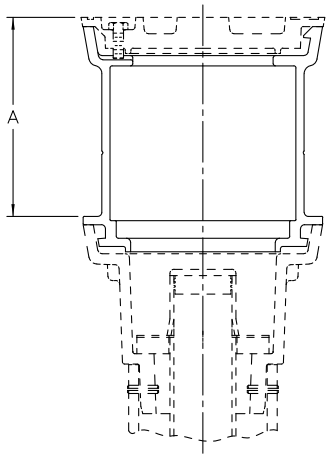

6-INCH TOP EXTENSION

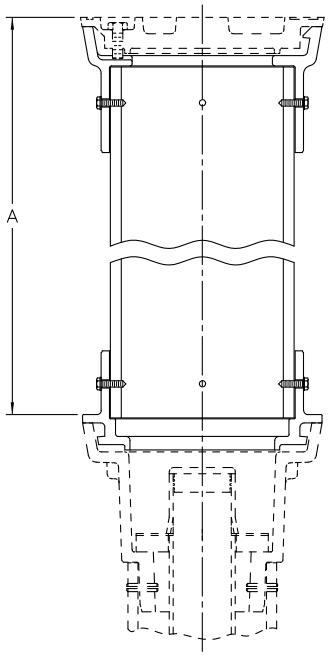

12-INCH, 18-INCH AND 24-INCH
TOP EXTENSION ASSEMBLIES

IL1716-10

Extension Size	A	Extension Weight
2”	2.00	8 LBS
6”	6.00	12 LBS
12”	12.00	14 LBS
18”	18.00	15 LBS
24”	24.00	16 LBS

AMERICAN Flow Control

TRENCH ADAPTER® (ADJUSTABLE VALVE BOX AND STEM EXTENSION SYSTEM)

SUBMITTAL SHEET

Valve size	Trench Depth and Model Number																			
	2'0"	2'6"	3'0"	3'6"	4'0"	4'6"	5'0"	5'6"	6'0"	6'6"	7'0"	7'6"	8'0"	8'6"	9'0"	9'6"	10'0"	10'6"	11'0"	11'6"
2"	1	2	3,4	4	5	5	6	6	6	6	7	7	7	7	7	7	7	7	7	8
2-1/2"	-	2	3	4	5	5	5,6	6	6	6	6,7	7	7	7	7	7	7	7	7	8
3"	-	2	2,3	4	5	5	5,6	6	6	6	6,7	7	7	7	7	7	7	7	7	8
4"	-	1	3	4	4,5	5	5,6	6	6	6	6	7	7	7	7	7	7	7	7	8
6"	-	-	2	3	4	5,4	5	5,6	6	6	6	6	7	7	7	7	7	7	7	7
8"	-	-	-	2	3,4	4	5	5	6	6	6	6	6	7	7	7	7	7	7	7
10"	-	-	-	1	2	3,4	4	5	5	6	6	6	6	7	7	7	7	7	7	7
12"	-	-	-	-	1	2,3	3,4	4,5	5	5	6	6	6	6	7	7	7	7	7	7
14"	-	-	-	-	-	-	-	3	4	5	5	5	6	6	6	6	7	7	7	7
16"	-	-	-	-	-	-	-	-	3,4	4	5	5	6	6	6	6	7	7	7	7
18"	-	-	-	-	-	-	-	-	2,3	4	4	5	5	6	6	6	6	7	7	7
20"	-	-	-	-	-	-	-	-	-	2,3	4	4	5	5	6	6	6	6	7	7
24"	-	-	-	-	-	-	-	-	-	-	2	3	4	5	5	5	6	6	6	6

Valve Size	Trench Depth and Model Number																
	12'0"	12'6"	13'0"	13'6"	14'0"	14'6"	15'0"	15'6"	16'0"	16'6"	17'0"	17'6"	18'0"	18'6"	19'0"	19'6"	20'0"
2"	8	8	8	8	8	8	8	9	9	9	9	9	9	9	9	9	-
2-1/2"	8	8	8	8	8	8	8	8,9	9	9	9	9	9	9	9	9	-
3"	8	8	8	8	8	8	8	8	9	9	9	9	9	9	9	9	-
4"	8	8	8	8	8	8	8	8	9	9	9	9	9	9	9	9	9
6"	8	8	8	8	8	8	8	8	8	9	9	9	9	9	9	9	9
8"	7	8	8	8	8	8	8	8	8	8	9	9	9	9	9	9	9
10"	7	7	8	8	8	8	8	8	8	8	9	9	9	9	9	9	9
12"	7	7	8	8	8	8	8	8	8	8	8	9	9	9	9	9	9
14"	7	7	7	7	8	8	8	8	8	8	8	9	9	9	9	9	9
16"	7	7	7	7	7	8	8	8	8	8	8	8	8	9	9	9	9
18"	7	7	7	7	7	8	8	8	8	8	8	8	8	8	9	9	9
20"	7	7	7	7	7	7	8	8	8	8	8	8	8	8	8	9	9
24"	7	7	7	7	7	7	7	7	8	8	8	8	8	8	8	8	8

Where two model numbers are shown for a given valve/trench combination, use the dimensions in the table below to select the best fit.

Model	Valve Size	Dimension "B"
Series 2500	2"	4.75
	2-1/2"	7.00
	3"	8.13
Series 2500-1	4"	9.78
	6"	13.88
	8"	18.53
	10"	22.94
	12"	27.59.
Series 2500	14"	36.50
	16"	41.00
	18"	45.00
	20"	50.50
	24"	61.00

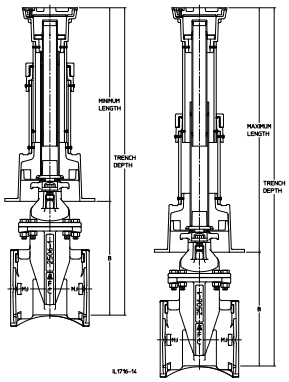

AMERICAN Flow Control

Model Number	Length		Quantity Required
	Minimum	Maximum	
1	18.25	20.25	
2	22.25	28.25	
3	24.75	32.50	
4	29.75	40.50	
5	37.75	56.50	
6	49.75	80.50	
7	73.75	128.50	
8	127.75	179.75	
9	178.75	230.75	

Service Type (Lid Color)
☐ Potable Water (Blue)
☐ Sewer (Green)
☐ Re-Use Water (Lavender)
☐ Gas (Yellow)
☐ Fire (Red)
☐ Water (Black Urethane)

Top Extensions		
2" Extension	☐ Yes	☐ No
6" Extension	☐ Yes	☐ No
12" Extension	☐ Yes	☐ No
18" Extension	☐ Yes	☐ No
24" Extension	☐ Yes	☐ No

NOTES:

1. On model numbers 1 through 9, the extension stem is optional.
2. AFC valves are not suitable for use on gas service.

Visit our web site at http://www.american-usa.com/afc

Installation

The Trench Adapter is a fully-adjustable valve box and extension stem system. The valve box and the built-in extension stem adjust to grade in a matter of seconds, completely eliminating the need to cut extension stems in the field.

The Trench Adapter's base is sized to fit over the top of most gate valves, butterfly valves, plug valves, etc. If the valve has a post indicator flange, the Trench Adapter can be bolted directly to the post flange. Please follow these instructions to install the Trench Adapter:

1. Check the length of the Trench Adapter to be sure the correct model is being used. Allow for adequate adjustment for trench depth.

CAUTION
The Trench Adapter is provided with a removable cover on the "Base" (7) for shipping purposes. Use CAUTION when removing this cover. When the cover is removed, the internal stem can drop below the base.

2. Remove the 2-piece AMERICAN "Self-Centering Alignment Ring with Sliding Adjuster" (26 and 27) from the "Base" of the Trench Adapter.
3. Remove the "Sliding Adjuster" (27) from the "Alignment Ring". Place "Alignment Ring" (26) under the wrench nut of the valve. Replace the "Sliding Adjuster" on the "Alignment Ring".
4. Lower the bottom of the "Lower Stem" (17) of the Trench Adapter onto the wrench nut of the valve, so the extension stem engages the square wrench nut. Lower the "Base" of the Trench Adapter over the "Self-Centering Alignment Ring".
5. Position and hold the Trench Adapter in the vertical position. Backfill up to the bottom of the "Reducer Coupling" (5).
6. Loosen, by turning counterclockwise, the "Reducer Gland" (4) and lift the top section by Sliding the " Upper Pipe" (16) to the desired height. Securely tighten the "Reducer Coupling Gland" to hold the top section in the desired position.
7. Make sure the Trench Adapter maintains vertical alignment and backfill to grade.
8. Loosen "Locking Bolt" (3) and remove "Lid" (1) by turning counterclockwise. Verify Trench Adapter is engaged and can properly operate the valve by placing a valve wrench onto the "Upper Stem" (18) and "Cap" (14) and turning. Care should be taken to leave the valve in its proper position.
9. Make sure the "Locking Bolt" is clear of the bottom of the "Lid". Replace the "Lid" and turn clockwise. Use a valve key to make sure the "Lid" has been turned into the fully locked position. Tighten the "Locking Bolt" and using the valve key make sure it is securely engaged in the locking recess, found in the "Top" (2) of the Trench Adapter.

Extending

Extensions are available in 2-, 6-, 12-, 18-, and 24- in. lengths. To extend, simply remove the lid. Install the extension into the top section of the Trench Adapter. The 2 in. extension locks into place in the same manner as the lid. Lock the lid into the extension piece.

TRENCH ADAPTER® - PARTS LIST

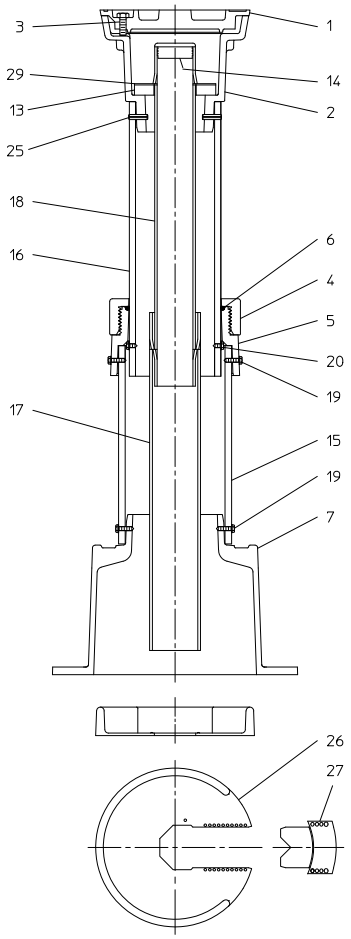

Ref No.	Description	Material	Qty
1	Lid	Ductile Iron	1
		Urethane (Optional)	
2	Top	Ductile Iron	1
3	Locking Bolt	Stainless Steel	1
4	Reducer Coupling Gland	High Density Polyethylene	1
5	Reducer Coupling	High Density Polyethylene	1
6	O-ring	Rubber	1
7	Base	High Density Polyethylene	1
13	Grit Washer	High Density Polyethylene	1
14	Cap	Plastic	1
15	Lower Pipe	High Density Polyethylene	1
16	Upper Pipe	Galvanized Steel Tubing	1
17	Lower Stem	Galvanized Steel Tubing	1
18	Upper Stem	Galvanized Steel Tubing	1
19	Screw	Stainless Steel	8
20	Screw	Stainless Steel	2
25	Spring Pin	Stainless Steel	2
26	Alignment Ring	Glass Filled Polyethylene	1
27	Alignment Ring Guide	Glass Filled Polyethylene	1
29	Stem Washer	Stainless Steel	1

TRENCH ADAPTER® ACCESSORIES - PARTS LIST

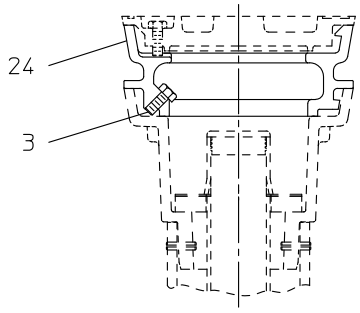

2-INCH TOP EXTENSION

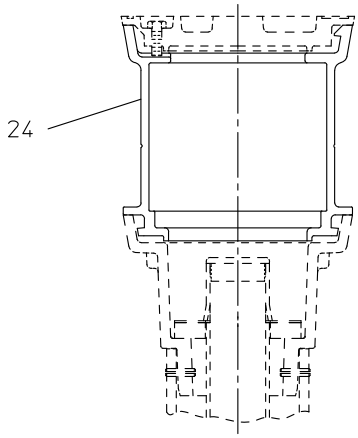

6-INCH TOP EXTENSION

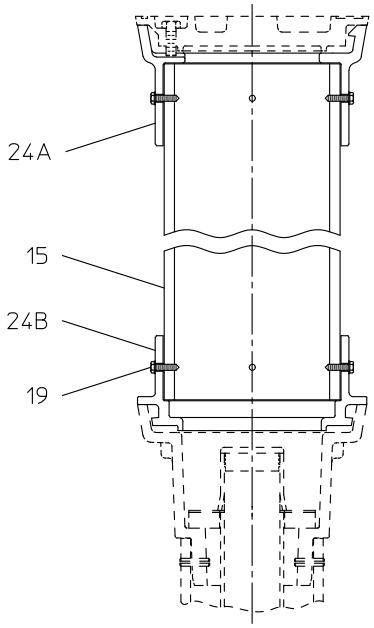

IL1716-11

12-INCH, 18-INCH AND 24-INCH
TOP EXTENSION ASSEMBLIES

Ref No.	Description	Material	Quantity				
			2”	6”	12”	18”	24”
3	Locking Bolt	Stainless Steel	1	-	-	-	-
15	Pipe	High Density Polyethylene	-	-	1	1	1
19	Screw	Stainless steel	-	-	8	8	8
24	Top Extension	Ductile Iron	1	1	-	-	-
24A	Top Extension	Ductile Iron	-	-	1	1	1
24B	Top Extension	Ductile Iron	-	-	1	1	1

Note:
1. Ref. number 24A & 24B are not available individually for repairs.
2. Reference number 3 locking bolt not included or required when furnished with urethane lid.

AMERICAN Flow Control

SECTION 8A

RETROFIT VALVE BOX INSERT

AMERICAN
FLOW CONTROL

THE RIGHT WAY

INDEX

RETROFIT VALVE BOX INSERT

PAGE

INTRODUCTION 8A-2
FEATURES AND BENEFITS 8A-3
SPECIFICATIONS 8A-3
ORDERING
Dimensions:
Overall Retrofit Valve Box Insert and Weights 8A-4
Trench Depth and Model Number 8A-5
Accessories 8A-6
Submittal Sheet 8A-7

INSTALLATION
Installation 8A-8
Extending 8A-8

REPAIRS
Parts Lists:
Retrofit Valve Box Insert 8A-9
Accessories 8A-10

RETROFIT VALVE BOX INSERT

AMERICAN Flow Control's **Retrofit Valve Box Insert** upgrades previously installed standard cast iron valve boxes with the same features available in the AMERICAN Flow Control Trench Adapter.

The Retrofit features a self-adjusting extension stem system that is available in trench depths ranging from 3 ft - 20 ft.

Features

AMERICAN Flow Control's Retrofit Valve Box Insert up-grades previously installed standard cast iron valve boxes with the features of the AMERICAN Flow Control Trench Adapter. The Retrofit features a self-adjusting extension stem system that is available in trench depths ranging from 3 ft to 20 ft. This will eliminate the problem of trying to locate and engage the operating nut on the valve. With conventional valve boxes, the valve operating nut may be several feet below grade making it difficult to locate and align the T-handle wrench on the operating nut.

This is especially difficult if the valve box is filled with debris, mud and water. The Trench Adapter assures that the valve can be operated at ground level. Simply remove the lid and the operating nut is accessible and ready to use.

The grit and stem washers support the extension stem in the top section of the valve box. The grit washer is designed to keep gravel and debris from entering the valve box interior. The valve box locking lid is color coded and includes cast markings to indicate potable water, sewer, re-use water, gas or fire.

Benefits

- Built-in extension stem automatically adjusts to the same height as the valve box.
- Eliminates field cut extension stems.
- Operating nut will always be at groundline, so it saves time in operating the valve. This is especially important in emergency situations.
- Eliminates the need for long T-handle wrench.
- Keeps valve box "clean" from debirs that could interfere with the operation of the valve.
- Lid locks in place reducing damage or injuries due to lids being loose or missing.
- Extension stem has been proof-of-design tested to 1000 ft-lb of torque without failure.
- Valve box is sealed from mud, dirt and gravel.
- Top extensions are available for height adjustment should there be a grade change.
- Fits almost any type of valve box.
- Installs in minutes.

Specifications

A valve box upgrade insert shall be one complete assembled unit composed of a ductile iron insert top, a self-adjusting extension stem, grit washer and locking lid. The valve box top section shall be adaptable to fit inside a standard valve box upper section.

The extension stem assembly shall be of a telescoping design that allows for variable lengths. The material shall be galvanized square steel tubing. The extension stem must be capable of surviving a torque test to 1000 ft-lb without failure. Valve box insert shall be AMERICAN Flow Control's Retrofit Valve Box Insert.

RETROFIT VALVE BOX INSERT - DIMENSIONS

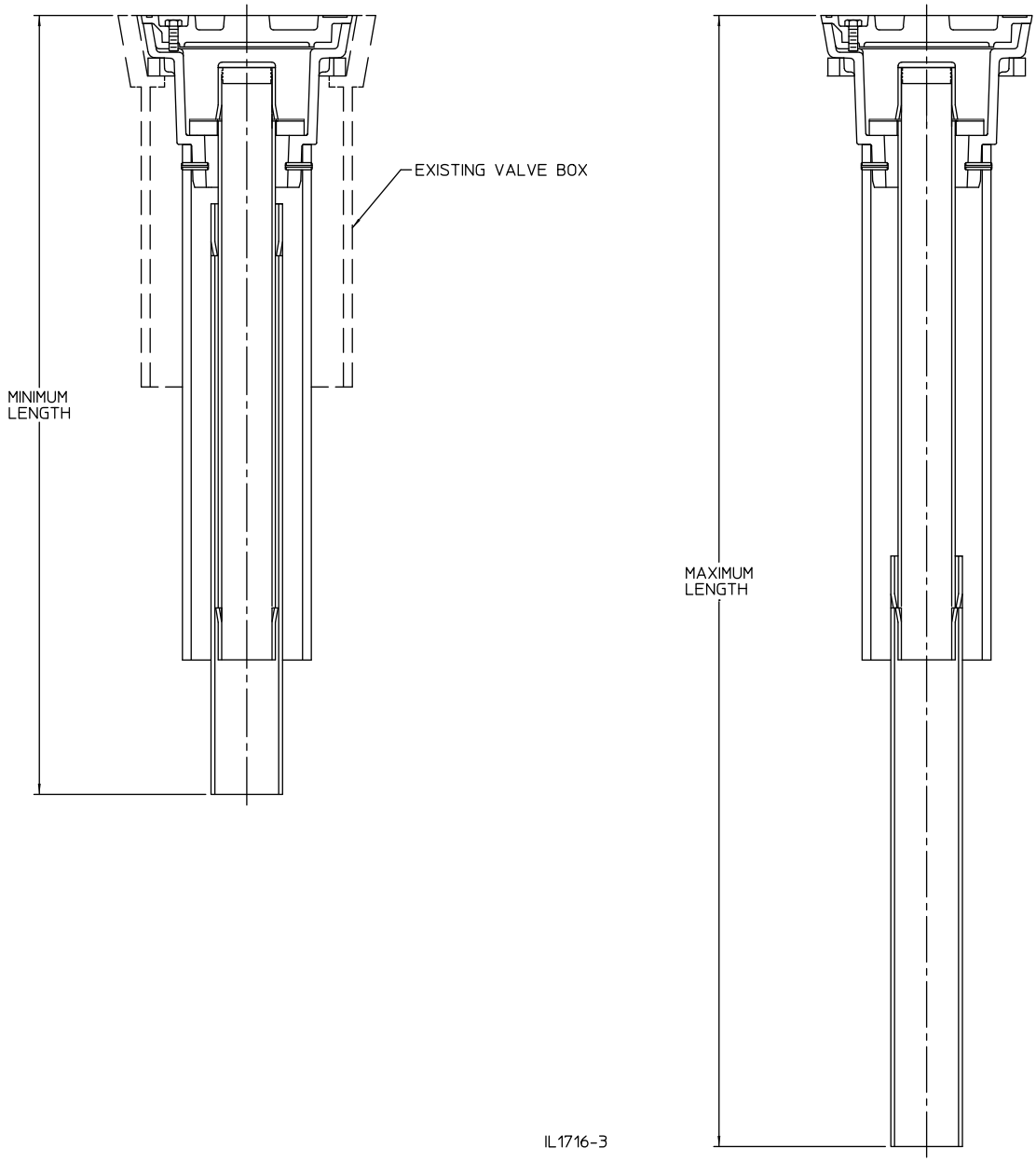

Model Number	Length		Assembly Weight
	Minimum	Maximum	
2A	19.00	24.00	27 LBS
3A	23.50	31.50	29 LBS
4A	27.50	39.50	32 LBS
5A	35.50	55.50	38 LBS
6A	47.50	79.50	45 LBS
7A	71.50	127.50	60 LBS
8A	122.75	178.75	87 LBS
9A	173.75	229.75	105 LBS

RETROFIT VALVE BOX INSERT - DIMENSIONS

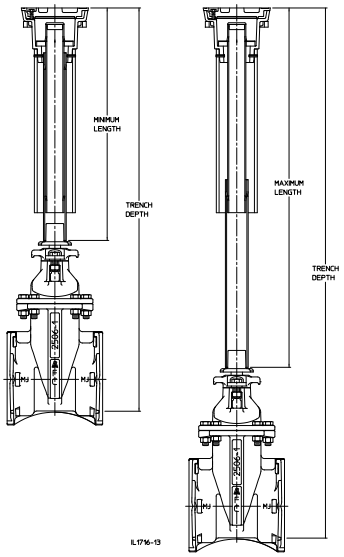

Valve size	Trench Depth and Model Number																			
	2'0"	2'6"	3'0"	3'6"	4'0"	4'6"	5'0"	5'6"	6'0"	6'6"	7'0"	7'6"	8'0"	8'6"	9'0"	9'6"	10'0"	10'6"	11'0"	11'6"
2"	-	2A	3A,4A	4A	5A	5A	6A	6A	6A	6A	7A	7A	7A	7A	7A	7A	7A	7A	7A	8A
2-1/2"	-	2A	3A	4A	5A	5A	5A,6A	6A	6A	6A	6A,7A	7A	7A	7A	7A	7A	7A	7A	7A	8A
3"	-	2A	2A,3A	4A	5A	5A	5A,6A	6A	6A	6A	6A,7A	7A	7A	7A	7A	7A	7A	7A	7A	8A
4"	-	-	3A	4A	4A,5A	5A	5A,6A	6A	6A	6A	6A	7A	7A	7A	7A	7A	7A	7A	7A	8A
6"	-	-	2A	3A	4A	5A,4A	5A	5A,6A	6A	6A	6A	6A	7A	7A	7A	7A	7A	7A	7A	7A
8"	-	-	-	2A	3A,4A	4A	5A	5A	6A	6A	6A	6A	6A	7A	7A	7A	7A	7A	7A	7A
10"	-	-	-	-	2A	3A,4A	4A	5A	5A	6A	6A	6A	6A	7A	7A	7A	7A	7A	7A	7A
12"	-	-	-	-	-	3A	4A,3A	4A,5A	5A	5A	6A	6A	6A	6A	7A	7A	7A	7A	7A	7A
14"	-	-	-	-	-	-	-	3A	4A	5A	5A	5A	6A	6A	6A	6A	7A	7A	7A	7A
16"	-	-	-	-	-	-	-	-	3A,4A	4A	5A	5A	6A	6A	6A	6A	7A	7A	7A	7A
18"	-	-	-	-	-	-	-	-	2A	3A,4A	4A	5A	5A,6A	6A	6A	6A	6A	7A	7A	7A
20"	-	-	-	-	-	-	-	-	2A	3A	3A,4A	4A	5A	5A	6A	6A	6A	6A	7A	7A
24"	-	-	-	-	-	-	-	-	-	-	2A	3A	4A	5A	5A	5A	6A	6A	6A	6A,7A

Valve Size	Trench Depth and Model Number																
	12'0"	12'6"	13'0"	13'6"	14'0"	14'6"	15'0"	15'6"	16'0"	16'6"	17'0"	17'6"	18'0"	18'6"	19'0"	19'6"	20'0"
2"	8A	8A	8A	8A	8A	8A	8A	9A	9A	9A	9A	9A	9A	9A	9A	9A	-
2-1/2"	8A	8A	8A	8A	8A	8A	8A	8A,9A	9A	9A	9A	9A	9A	9A	9A	9A	-
3"	8A	8A	8A	8A	8A	8A	8A	8A	9A	9A	9A	9A	9A	9A	9A	9A	-
4"	8A	8A	8A	8A	8A	8A	8A	8A	9A	9A	9A	9A	9A	9A	9A	9A	9A
6"	8A	8A	8A	8A	8A	8A	8A	8A	8A	9A	9A	9A	9A	9A	9A	9A	9A
8"	7A	8A	8A	8A	8A	8A	8A	8A	8A	8A	9A	9A	9A	9A	9A	9A	9A
10"	7A	7A	8A	8A	8A	8A	8A	8A	8A	8A	9A	9A	9A	9A	9A	9A	9A
12"	7A	7A	7A	8A	8A	8A	8A	8A	8A	8A	8A	9A	9A	9A	9A	9A	9A
14"	7A	7A	7A	7A	8A	8A	8A	8A	8A	8A	8A	8A	8A	9A	9A	9A	9A
16"	7A	7A	7A	7A	7A	8A	8A	8A	8A	8A	8A	8A	8A	9A	9A	9A	9A
18"	7A	7A	7A	7A	7A	7A,8A	8A	8A	8A	8A	8A	8A	8A	8A	9A	9A	9A
20"	7A	7A	7A	7A	7A	7A	8A	8A	8A	8A	8A	8A	8A	8A	9A	9A	9A
24"	7A	7A	7A	7A	7A	7A	7A	7A,8A	8A	8A	8A	8A	8A	8A	8A	8A	9A

Where two model numbers are shown for a given valve/trench combination, use the dimensions in the table below to select the best fit.

Model Number	Length	
	Minimum	Maximum
2A	19.00	24.00
3A	23.50	31.50
4A	27.50	39.50
5A	35.50	55.50
6A	47.50	79.50
7A	71.50	127.50
8A	122.75	178.75
9A	173.75	229.75

RETROFIT VALVE BOX INSERT ACCESSORIES - DIMENSIONS

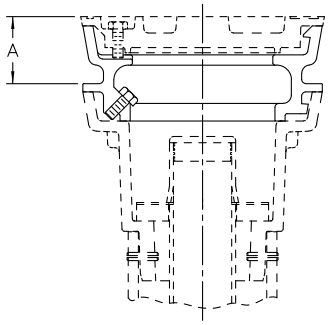

2-INCH TOP EXTENSION

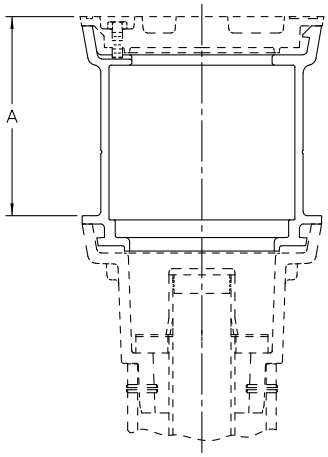

6-INCH TOP EXTENSION

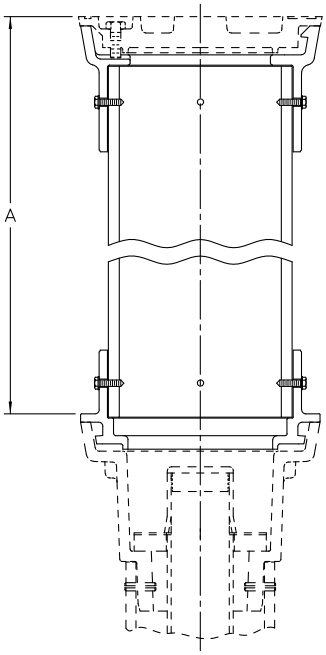

12-INCH, 18-INCH AND 24-INCH
TOP EXTENSION ASSEMBLIES

IL1716-10

Extension Size	A	Extension Weight
2”	2.00	8 LBS
6”	6.00	12 LBS
12”	12.00	14 LBS
18”	18.00	15 LBS
24”	24.00	16 LBS

AMERICAN Flow Control®
RETROFIT VALVE BOX INSERT

SUBMITTAL SHEET

Valve size	Trench Depth and Model Number																			
	2'0"	2'6"	3'0"	3'6"	4'0"	4'6"	5'0"	5'6"	6'0"	6'6"	7'0"	7'6"	8'0"	8'6"	9'0"	9'6"	10'0"	10'6"	11'0"	11'6"
2"	-	2A	3A,4A	4A	5A	5A	6A	6A	6A	6A	7A	7A	7A	7A	7A	7A	7A	7A	7A	8A
2-1/2"	-	2A	3A	4A	5A	5A	5A,6A	6A	6A	6A	6A,7A	7A	7A	7A	7A	7A	7A	7A	7A	8A
3"	-	2A	2A,3A	4A	5A	5A	5A,6A	6A	6A	6A	6A,7A	7A	7A	7A	7A	7A	7A	7A	7A	8A
4"	-	-	3A	4A	4A,5A	5A	5A,6A	6A	6A	6A	6A	7A	7A	7A	7A	7A	7A	7A	7A	8A
6"	-	-	2A	3A	4A	5A,4A	5A	5A,6A	6A	6A	6A	6A	7A	7A	7A	7A	7A	7A	7A	7A
8"	-	-	-	2A	3A,4A	4A	5A	5A	6A	6A	6A	6A	6A	7A	7A	7A	7A	7A	7A	7A
10"	-	-	-	-	2A	3A,4A	4A	5A	5A	6A	6A	6A	6A	7A	7A	7A	7A	7A	7A	7A
12"	-	-	-	-	-	3A	4A,3A	4A,5A	5A	5A	6A	6A	6A	6A	7A	7A	7A	7A	7A	7A
14"	-	-	-	-	-	-	-	3A	4A	5A	5A	5A	6A	6A	6A	6A	7A	7A	7A	7A
16"	-	-	-	-	-	-	-	-	3A,4A	4A	5A	5A	6A	6A	6A	6A	7A	7A	7A	7A
18"	-	-	-	-	-	-	-	-	2A	3A,4A	4A	5A	5A,6A	6A	6A	6A	6A	7A	7A	7A
20"	-	-	-	-	-	-	-	-	2A	3A	3A,4A	4A	5A	5A	6A	6A	6A	6A	7A	7A
24"	-	-	-	-	-	-	-	-	-	-	2A	3A	4A	5A	5A	5A	6A	6A	6A	6A,7A

Valve Size	Trench Depth and Model Number																
	12'0"	12'6"	13'0"	13'6"	14'0"	14'6"	15'0"	15'6"	16'0"	16'6"	17'0"	17'6"	18'0"	18'6"	19'0"	19'6"	20'0"
2"	8A	8A	8A	8A	8A	8A	8A	9A	9A	9A	9A	9A	9A	9A	9A	9A	-
2-1/2"	8A	8A	8A	8A	8A	8A	8A	8A,9A	9A	9A	9A	9A	9A	9A	9A	9A	-
3"	8A	8A	8A	8A	8A	8A	8A	8A	9A	9A	9A	9A	9A	9A	9A	9A	-
4"	8A	8A	8A	8A	8A	8A	8A	8A	9A	9A	9A	9A	9A	9A	9A	9A	9A
6"	8A	8A	8A	8A	8A	8A	8A	8A	8A	9A	9A	9A	9A	9A	9A	9A	9A
8"	7A	8A	8A	8A	8A	8A	8A	8A	8A	8A	9A	9A	9A	9A	9A	9A	9A
10"	7A	7A	8A	8A	8A	8A	8A	8A	8A	8A	9A	9A	9A	9A	9A	9A	9A
12"	7A	7A	7A	8A	8A	8A	8A	8A	8A	8A	8A	9A	9A	9A	9A	9A	9A
14"	7A	7A	7A	7A	8A	8A	8A	8A	8A	8A	8A	8A	8A	9A	9A	9A	9A
16"	7A	7A	7A	7A	7A	8A	8A	8A	8A	8A	8A	8A	8A	9A	9A	9A	9A
18"	7A	7A	7A	7A	7A	7A,8A	8A	8A	8A	8A	8A	8A	8A	8A	9A	9A	9A
20"	7A	7A	7A	7A	7A	7A	8A	8A	8A	8A	8A	8A	8A	8A	9A	9A	9A
24"	7A	7A	7A	7A	7A	7A	7A	7A,8A	8A	8A	8A	8A	8A	8A	8A	8A	9A

Where two model numbers are shown for a given valve/trench combination, use the dimensions in the table below to select the best fit.

Model Number	Length		Quantity Required
	Minimum	Maximum	
2A	19.00	24.00	
3A	23.50	31.50	
4A	27.50	39.50	
5A	35.50	55.50	
6A	47.50	79.50	
7A	71.50	127.50	
8A	122.75	178.75	
9A	173.75	229.75	

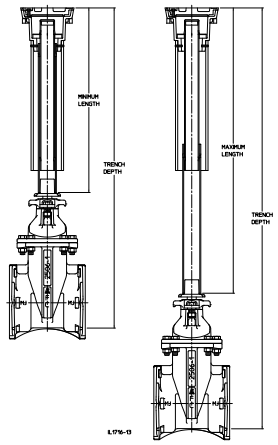

AMERICAN Flow Control®

Service Type (Lid Color)
☐ Potable Water (Blue)
☐ Sewer (Green)
☐ Re-Use Water (Lavender)
☐ Gas (Yellow)
☐ Fire (Red)

Top Extensions	
2" Extension	☐ Yes ☐ No
6" Extension	☐ Yes ☐ No
12" Extension	☐ Yes ☐ No
18" Extension	☐ Yes ☐ No
24" Extension	☐ Yes ☐ No

NOTE: AFC Valves are not suitable for use on gas service

Visit our web site at http://www.american-usa.com/afc

Installation

1. Check the opening direction of the valve. When installing the AFC Retrofit Valve Box Insert on an open-right (clockwise opening direction) valve, the cap (14) should be painted red.
2. Loosen the locking bolt (3), remove the lid (1) and grasp the top of the upper stem. Pull the stem assembly including the upper and lower stems (17 and 18), the grit washer (13) and the stem washer (29) to separate the stem assembly from the top and upper pipe (2 and 16).
3. Insert the top and upper pipe assembly and the top spacer (28) into the existing valve box. Install the lid and check to be sure that the lid is at the desired elevation.
4. Grasping the upper stem, lift the stem assembly into a vertical position and raise the upper stem to allow the lower stem to gently extend until fully extended.

CAUTION
Do not release the lower stem to fall uncontrolled into the valve box. Dropping the stem into the valve box may damage the valve and/or stem assembly.

5. Place the lower stem of the fully-extended stem into the top (2) and carefully lower the stem assembly towards the valve.
6. Engage the end of the lower stem onto the valve operating nut and carefully lower the upper stem, stem washer and grit washer into the top.
7. Install a valve key onto the top of upper stem and operate the valve to verify that the lower stem is properly engaged with the valve operating nut. Care should be taken to leave the valve in its proper position.
8. Make sure the locking bolt is clear of the bottom of the "lid". Replace the lid and turn clockwise. Use a valve key to make sure the lid has been turned into the fully locked position. Tighten the locking bolt and using the valve key make sure it is securely engaged in the locking recess found in the top (2) of the Retrofit Valve Box Insert.

Extending

Extensions are available in 2 in., 6 in., 12 in., 18 in. and 24 in. lengths. To extend, simply remove the lid. Install the extension into the top section of the Trench Adapter. The 2 in. extension locks into place in the same manner as the lid. Lock the lid into the extension piece.

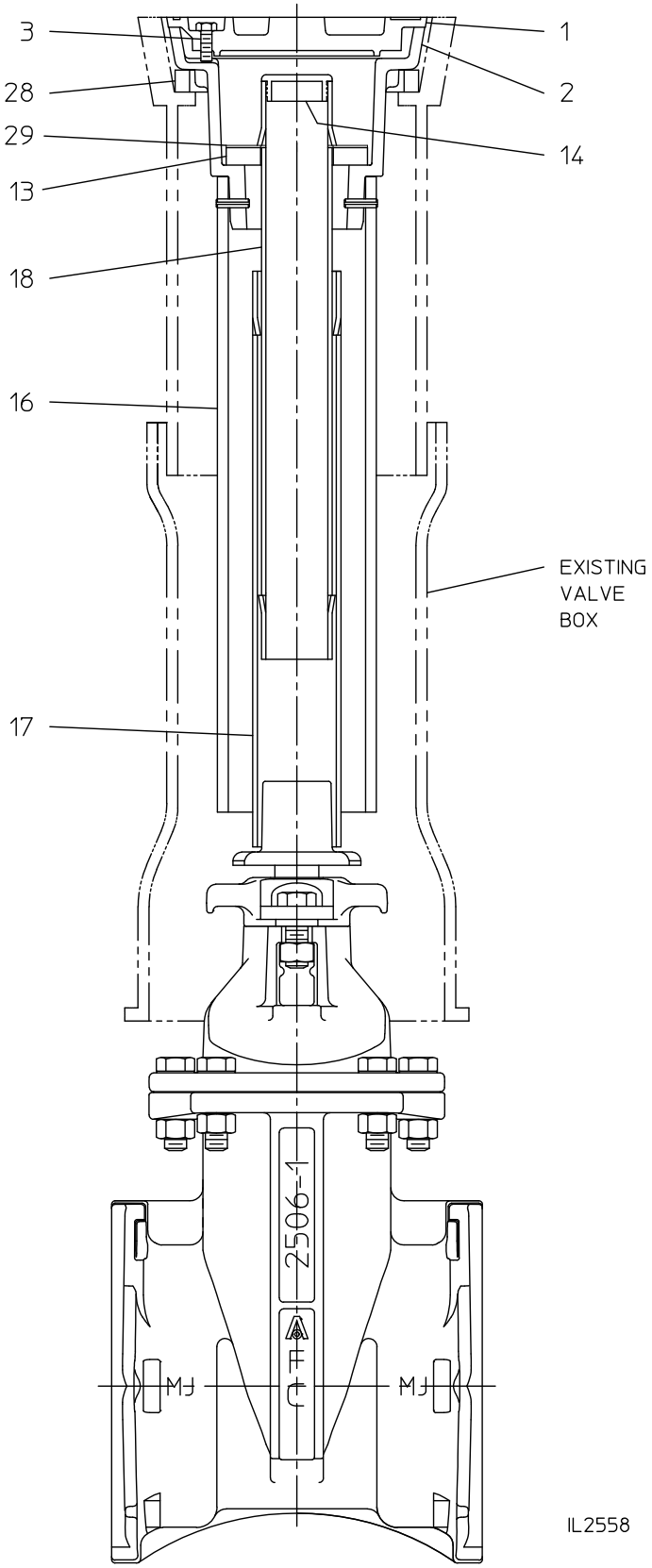

RETROFIT VALVE BOX INSERT - PARTS LIST

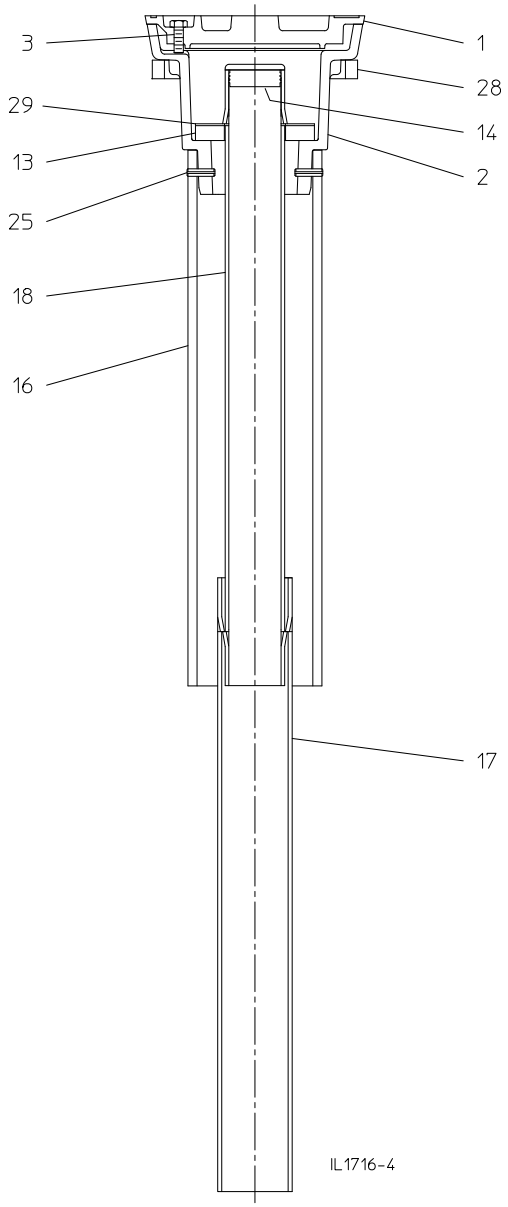

Ref No.	Description	Material	Qty
1	Lid	Ductile Iron	1
2	Top	Ductile Iron	1
3	Locking Bolt	Stainless Steel	1
13	Grit Washer	High Density Polyethylene	1
14	Cap	Plastic	1
16	Upper Pipe	Galvanized Steel Tubing	1
17	Lower Stem	Galvanized Steel Tubing	1
18	Upper Stem	Galvanized Steel Tubing	1
25	Spring Pin	Stainless Steel	2
28	Top Spacer	Ductile Iron	1
29	Stem Washer	Stainless Steel	1

RETROFIT VALVE BOX INSERT ACCESSORIES - PARTS LIST

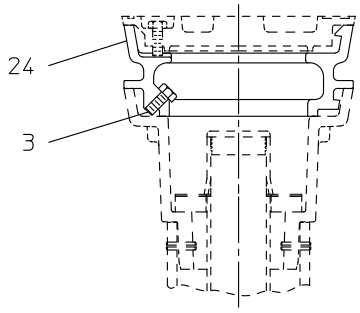

2-INCH TOP EXTENSION

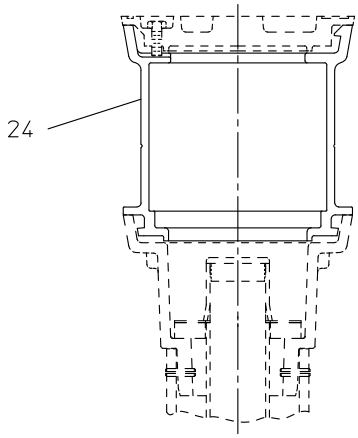

6-INCH TOP EXTENSION

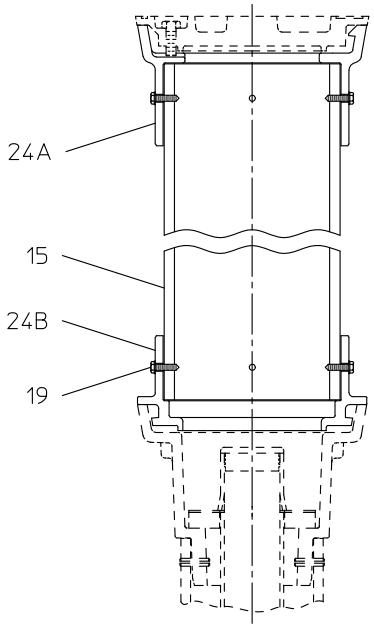

IL1716-11

12-INCH, 18-INCH AND 24-INCH
TOP EXTENSION ASSEMBLIES

Ref No.	Description	Material	Quantity				
			2”	6”	12”	18”	24”
3	Locking Bolt	Stainless Steel	1	-	-	-	-
15	Pipe	High Density Polyethylene	-	-	1	1	1
19	Screw	Stainless Steel	-	-	8	8	8
24	Top Extension	Ductile Iron	1	1	-	-	-
24A	Top Extension (1)	Ductile Iron	-	-	1	1	1
24B	Top Extension (1)	Ductile Iron	-	-	1	1	1

Note:
1. Ref. number 24A & 24B are not available individually for repairs.

AMERICAN Flow Control

SECTION 9

WARRANTY

AMERICAN
FLOW CONTROL

THE RIGHT WAY

AMERICAN Flow Control LIMITED 10 YEAR PRODUCT WARRANTY

AMERICAN Flow Control (AFC) warrants that the products covered herby conform to the description and specifications, if any, on the face hereof, and are free from defects in materials and workmanship, for a period of ten (10) years from the date the products are first shipped. All other warranties are excluded, whether expressed or implied by operation of law or otherwise, including all implied warranties of merchantability or fitness for a particular purpose. Any certifications required by specific standards, specifications, and/or laws, codes, or regulations must be disclosed to AMERICAN Flow Control prior to the time the order is placed with seller. AMERICAN Flow Control shall not be responsible for any certifications or requirements not specifically incorporated into the order. AMERICAN Flow Control's sole liability (and buyer's exclusive remedy) hereunder, either for breach of warranty or for negligence, is expressly limited at the option of AMERICAN Flow Control:

(A)To the replacement at the agreed point of delivery of any products found to be defective or not to conform to the description and specifications set forth herein,

(B) To the repair of such products, or

(C) To the refund or crediting to buyer of the price of such products, or

(D) As to motors, controls, manual actuators, technology appurtenances, network connected items (including the AFC Semper®), locking or anti-tampering devices (including the AFC Captivater®) and/or accessories purchased by AMERICAN Flow Control from other suppliers and used or incorporated in AMERICAN Flow Control's products. AMERICAN Flow Control's warranty shall only apply to the extent of the supplier(s) warranty to AMERICAN Flow Control for such motors, controls, manual actuators, technology appurtenances, network connected items, locking or anti-tampering devices and/or accessories.

Anything contained herein to the contrary notwithstanding, AMERICAN Flow Control's warranties shall not apply to:

(A) Any product sold hereunder if buyer alters the product or replaces any part or parts of such product with any part or parts not manufactured, sold or offered for sale by AMERICAN Flow Control, or

(B) Damage to the products caused by exposure to the adverse service conditions, including the following:

- (i) Highly corrosive conditions;
- (ii) Excessive quantity of chemicals or chemicals not typically used in connection with the use of the products;
- (iii) Abrasive or damaging hydraulic or mechanical conditions; or
- (iv) Other damaging conditions not normally encountered in connection with the normal use of the products.

No representation or warranty, express or implied, made by any sales representative or other agent or representative of AMERICAN Flow Control, which is not specifically set forth herein, shall be binding upon AMERICAN Flow Control. In the event the material to be furnished hereunder is claimed to be defective, AMERICAN Flow Control shall be given ample opportunity for inspection or, upon request, be furnished with a sample.

AMERICAN Flow Control shall not be liable for incidental or consequential damages directly or indirectly arising or resulting from the breach of any of the terms hereof or from the sale, handling or use of the products sold.

AMERICAN

FLOW CONTROL

THE RIGHT WAY

AMERICAN Flow Control

P.O. Box 2727
Birmingham, AL 35202-2727
Phone: 800-326-8051
Fax: 800-610-3569
Email: afcsales@american-usa.com

Waterous Company

125 Hardman Avenue South
South St. Paul, MN 55075-2421
Phone: 888-266-3686
Fax: 800-601-2809
Email: afcsales@american-usa.com

WWW.AMERICAN-USA.COM

Product literature may become outdated. AMERICAN is not responsible for out-of-date information, errors or omissions.
Product diagrams are illustrative only. Please contact AMERICAN for the most current product information.

wasda®